STATE OF LOUISIANA
DEPARTMENT OF TRANSPORTATION AND DEVELOPMENT

CONSTRUCTION PROPOSAL

FEDERAL AID PROJECT

STATE PROJECT NOS. 007-02-0097, 007-03-0053 and 007-04-0048
US 61 SIGNAL UPGRADES
ROUTE US 61
ST. JOHN THE BAPTIST, ST. CHARLES and JEFFERSON PARISHES

STATE OF LOUISIANA
EDWIN L. LANTZER
REG. No. 24733
REGISTERED PROFESSIONAL ENGINEER IN MECHANICAL ENGINEERING

Edwin Lantzer
18 MAY 2009

STATE PROJECT NOS. 007-02-0097, 007-03-0053 and 007-04-0048

TABLE OF CONTENTS

	Page No.
Title Sheet	A-1
Table of Contents	B-1
Notice to Contractors	C-1 thru C-2
Special Provisions	D-1 thru D-50
Supplemental Specifications:	
General Liability Policies (05/75)	E-1 thru E-14
Supplemental Specifications for 2006 Standard Specifications (08/08)	E-15 thru E-47
Female and Minority Participation in Construction (01/83)	E-48 thru E-55
New Orleans Plan (01/83)	E-56 thru E-57
Required Contract Provisions, Federal-Aid Construction Contracts (04/93) (Rev. 05/94)	F-1 thru F-10
DBE Participation in Federal Aid Construction Contracts	G-1 thru G-2
Minimum Wage Determination	H-1 thru H-4
Traffic Control System/Traffic Control Standard 18A (01/08)	I-1 thru I-99
Construction Proposal Information:	
Title Sheet	J-1
Bid Bond	K-1
Schedule of Items	L-1 thru L-18
Construction Proposal Signature and Execution Form	M-1 thru M-2

NOTICE TO CONTRACTORS (11/08)

Electronic bids and electronic bid bonds for the following project will be downloaded by the Department of Transportation and Development (DOTD) on **Wednesday, June 17, 2009. Paper bids and paper bid bonds will not be accepted.** Electronic bids and electronic bid bonds must be submitted through www.bidx.com prior to the electronic bidding deadline. Beginning at 10:00 a.m., all bids will be downloaded and posted online at http://www.dotd.la.gov/cgi-bin/construction.asp. No bids are accepted after 10:00 a.m.

STATE PROJECT NOS. 007-02-0097, 007-03-0053 and 007-04-0048
FEDERAL AID PROJECT NO. 2606(513)
DESCRIPTION: US 61 SIGNAL UPGRADES
ROUTE: US 61
PARISHES: ST. JOHN THE BAPTIST, ST. CHARLES and JEFFERSON
TYPE: TRAFFIC SIGNAL SYSTEM UPGRADES, AND RELATED WORK.
LIMITS: State Project No. 007-02-0097: LOCATED AT VARIOUS INTERSECTION LOCATIONS AS DESCRIBED IN PLANS.
LIMITS: State Project No. 007-03-0053: LOCATED AT VARIOUS INTERSECTION LOCATIONS AS DESCRIBED IN PLANS.
LIMITS: State Project No. 007-04-0048: LOCATED AT VARIOUS INTERSECTION LOCATIONS AS DESCRIBED IN PLANS.
ESTIMATED COST RANGE: $5,000,000 to $7,500,000
PROJECT ENGINEER: PERILLOUX, STEVE, 683 N. Morrison Blvd., Hammond, LA, (985) 375-0273.
PROJECT MANAGER: COLVIN, JODY.
COST OF PROPOSAL FORMS: $25.00
COST OF PLANS: $19.00 for complete plans.

Bids must be prepared and submitted in accordance with Section 102 of the 2006 Louisiana Standard Specifications for Roads and Bridges as amended by the project specifications, and must include all information required by the proposal.

Paper plans and/or proposals may be obtained in Room 101-A of the DOTD Headquarters Administration Building, 1201 Capitol Access Road in Baton Rouge, or by contacting the DOTD; Email: sharonknight@dotd.la.gov, Phone (225) 379-1111, FAX: (225) 379-1714, or by written requests sent to the Louisiana Department of Transportation and Development, Project Control Section, P. O. Box 94245, Baton Rouge, LA 70804-9245. Proposals will not be issued later than 24 hours prior to the time set for opening bids. All Addenda, Amendments, Letters of Clarification, and Withdrawal Notices will be posted online. **Paper notices will not be distributed.** Construction proposal information may be accessed via the Internet at www.dotd.la.gov. From the LA DOTD home page, select the following options: **Doing Business with DOTD**, then **Construction Letting Information**. Once the **Construction Letting Information** page appears, find the **Notice to Contractors** box. From the drop down menu, select the appropriate letting date and press the "Go To button to open the page, which provides a listing of all projects to be let and a **Construction Proposal Documents** link for each project. All project specific notices are found here. **It will be the responsibility of the bidder to check for updates.** If paper copies of the proposal are desired, the proposal cost is $25.00. If paper copies of the plans are desired, the cost of the plans is $19.00 for complete plans. The purchase price for paper plans and proposals is non-refundable. Additionally, plans and specifications may be seen at the Project Engineer's office or in Room 101-A of the DOTD's Headquarters Administration Building in Baton Rouge. Upon request, the Project Engineer will show the work.

All questions concerning the plans shall be submitted via the Electronic Plans Distribution Center known as **Falcon**. Questions submitted within 96 hours of the bid deadline may not be answered prior to bidding. Falcon may be accessed via the Internet at www.dotd.la.gov. From the home page, select ***Doing Business with DOTD*** from the left-hand menu, then select ***Construction Letting Information*** on the pop-up menu. On the Construction Letting Information page, select the link, ***DOTD's Plan Room***. Login to Falcon (or request an ID if a first-time user). Once logged in, you will have access to view Project Information, submit a question concerning the project, and view the plans. All submitted questions will be forwarded by email to the Project Manager and the Project Engineer for a response.

The U. S. Department of Transportation (DOT) operates a toll free "Hotline" Monday through Friday, 8:00 a.m. to 5:00 p.m., eastern time. Anyone with knowledge of possible bid rigging, bidder collusion, or other fraudulent activities should call 1-800-424-9071. All information will be treated confidentially and caller anonymity will be respected.

GENERAL BIDDING REQUIREMENTS (08/06): The specifications, contract and bonds governing the construction of the work are the 2006 Edition of the Louisiana Standard Specifications for Roads and Bridges, together with any supplementary specifications and special provisions attached to this proposal.

Bids shall be prepared and submitted in accordance with Section 102 of the Standard Specifications.

The plans herein referred to are the plans approved and marked with the project number, route and Parish, together with all standard or special designs that may be included in such plans. The bidder declares that the only parties interested in this proposal as principals are those named herein; that this proposal is made without collusion or combination of any kind with any other person, firm, association, or corporation, or any member or officer thereof; that careful examination has been made of the site of the proposed work, the plans, Standard Specifications, supplementary specifications and special provisions above mentioned, and the form of contract and payment, performance, and retainage bond; that the bidder agrees, if this proposal is accepted, to provide all necessary machinery, tools, apparatus and other means of construction and will do all work and furnish all material specified in the contract, in the manner and time therein prescribed and in accordance with the requirements therein set forth; and agrees to accept as full compensation therefore, the amount of the summation of the products of the quantities of work and material incorporated in the completed project, as determined by the engineer, multiplied by the respective unit prices herein bid.

It is understood by the bidder that the quantities given in this proposal are a fair approximation of the amount of work to be done and that the sum of the products of the approximate quantities multiplied by the respective unit prices bid shall constitute gross sum bid, which sum shall be used in comparison of bids and awarding of the contract.

The bidder further agrees to perform all extra and force account work that may be required on the basis provided in the specifications.

The bidder further agrees that within 15 calendar days after the contract has been transmitted to him, he will execute the contract and furnish the Department satisfactory surety bonds.

If this proposal is accepted and the bidder fails to execute the contract and furnish bonds as above provided, the proposal guaranty shall become the property of the Department; otherwise, said proposal guaranty will be returned to the bidder; all in accordance with Subsection 103.04.

MANDATORY ELECTRONIC BIDS AND ELECTRONIC BID BONDS SUBMISSION (10/08): This project requires mandatory electronic bidding. All Specifications, whether Standard, Supplemental or Special Provisions, are hereby amended to delete any references regarding paper bids and the ability to submit paper bid forms.

The contractor shall register online to be placed on the Louisiana Department of Transportation and Development (LA DOTD) prospective bidders list or for information only list.

Modifications to proposal documents will be posted on the Department's website at the following URL address: www.dotd.la.gov/cgi-bin/construction.asp.

LA DOTD shall not be responsible if the bidder cannot complete and submit a bid due to failure or incomplete delivery of the files submitted via the internet.

DBE PARTICIPATION IN FEDERAL AID CONSTRUCTION CONTRACTS (07/00): This project has not been selected for a specific DBE Goal. The contractor shall meet the obligations of the Required Contract Provisions for DBE Participation in Federal Aid Construction Contracts contained elsewhere herein.

BUY AMERICA PROVISIONS (03/95): Pursuant to the "Buy America Provisions" of the Surface Transportation Assistance Act (STAA) of 1982 as promulgated by current FHWA regulation 23 CFR 635.410 and the Intermodal Surface Transportation Efficiency Act of 1991 (ISTEA) amendment to (STAA), all steel and iron materials permanently installed on this project shall be manufactured, including application of a coating, in the United States, unless a waiver of these provisions is granted. Coating includes all processes which protect or enhance the value of the material to which the coating is applied. The request for waiver must be presented in writing to the Department by the contractor. Such waiver may be granted if it is determined that:

(1) The application of Buy America Provisions would be inconsistent with the public interest or

(2) Such materials are not produced in the United States in sufficient and reasonably available quantities and of a satisfactory quality.

Minimal use of foreign steel and iron materials will be allowed without waiver provided the cost of these materials does not exceed 0.1 percent of the total contract cost or $2,500, whichever is greater; however, the contractor shall make written request to the DOTD Construction Engineering Administrator for permission to use such foreign materials and shall furnish a listing of the materials, their monetary value, and their origin and place of production.

The burden of proof for the origin and place of production and any request for waiver is the responsibility of the contractor.

Prior to the use of steel and iron materials in the project, the contractor shall furnish Mill Test Reports to the engineer for such steel and iron materials, accompanied by a notarized certification stating that the Mill Test Reports represent the steel and iron materials to be furnished and that such materials were produced and fabricated in the United States.

Pig iron and processed, pelletized, and reduced iron ore are exempt from the Buy America Provisions.

INTENT OF CONTRACT (11/95): Subsection 104.01, Intent of Contract, is amended to include the following.

(a) Covenant of Good Faith and Fair Dealing.

This contract imposes an obligation of good faith and fair dealing in its performance and enforcement.

The contractor and the Department agree from the beginning to focus on creative cooperation, to avoid adverse confrontation, and to foster mutual respect, along with a positive commitment to honesty and integrity, and agree to the following mutual duties.

(1) Each will function within the laws and statutes applicable to their duties and responsibilities.
(2) Each will communicate in an open and candid manner.
(3) Each will assist in the other's performance.
(4) Each will avoid hindering the other's performance.
(5) Each will proceed to fulfill its obligations diligently.
(6) Each will cooperate in the common endeavor of the contract.

(b) Voluntary Partnering.

The Louisiana Department of Transportation and Development intends to encourage the foundation of a cohesive partnership with the contractor and its principal subcontractors and suppliers. This partnership will be structured to draw on the strengths of each organization to identify and achieve reciprocal goals. The objective is a cooperative approach to contract management that will reduce costs, litigation, and "stress" while completing the project in accordance with the plans and specifications.

This partnership will be bilateral in makeup, and participation in partnering will be totally voluntary and is not a requirement of the contract.

A partnering conference is to be implemented and held prior to beginning construction. The contractor's management personnel and the Project Engineer will initiate a partnering development conference. They, working with the assistance of the District Construction Engineer, will make arrangements to determine the facilitator, the attendees at the conference, agenda of the conference, duration, and location. Persons required to be in attendance will be the Project Engineer and key project personnel; the contractor's on-site project manager and key project supervision personnel of both the prime and principal subcontractors and suppliers. The project design engineers, FHWA, key company representatives, and key local government personnel will also be invited to attend as necessary. The contractor and DOTD will also be required to have Regional/District and Corporate/State level managers on the project team.

Any cost associated with effectuating this partnering will be agreed to by both parties and will be shared equally and will be paid for in accordance with Subsection 109.04. The contractor, DOTD, FHWA and all others invited to the partnering conference will be responsible for any expenses incurred by their respective employees which includes salaries, travel, and lodging.

Follow-up conferences may be held periodically throughout the duration of the contract as agreed by the contractor and the DOTD.

The establishment of a partnership charter on a project will not change the legal relationship of the parties to the contract nor relieve either party from any of the terms of the contract. This partnership charter is intended only to establish an environment of cooperation and communication between all parties involved with the completion of the project.

MAINTENANCE OF TRAFFIC (11/13/08): Subsection 104.03 of the 2006 Standard Specifications is amended to include the following requirements.

The contractor shall provide for and maintain through and local traffic at all times and shall conduct his operations in such manner as to cause the least possible interference with traffic at junctions with roads, streets and driveways.

PUBLIC CONVENIENCE AND SAFETY (09/05): Subsection 107.07 of the Standard Specifications is amended to include the following.

The procurement of police officers for public safety during construction shall be in accordance with the Department's Policy for Use of Police Officers in Construction/Maintenance Work Zones. The DOTD project engineer shall determine the need for police officers to assist in controlling traffic in a particular work zone. The number of officers needed, the tasks they will perform, and their location within the work zone will vary as a function of the zone type. Police officers shall be placed at strategic locations at times during construction as determined by the DOTD project engineer.

The three types of law enforcement services are Police Presence, Police Enforcement and Police Traffic Control. Police Presence is defined as the use of police officers at the beginning

of the active work zone area utilizing their blue lights to gain the attention of drivers. Police Enforcement is utilized when enforcement is required to enhance the safe operation of the work zone. Police Traffic Control is to be used in detour / diversion situations.

The DOTD project engineer will extend an invitation to the appropriate Louisiana State Police (LSP) Troop Commander to attend the pre-construction conference.

Prior to commencing the work on the project, the contractor shall contact the LSP Troop Commander to obtain law enforcement services of police officers during construction. If the LSP Troop is unable to provide law enforcement services for the project work zone, the LSP Troop Commander or the contractor will extend the invitation to the appropriate local law enforcement authorities.

Police officers will report directly to the contractor. However, the contractor will not have the authority to direct the placement of the police officer or the patrol vehicle in situations that are contrary to established procedures and/or could endanger the police officer. The DOTD project engineer will make the final determination on all issues regarding police officer responsibility in work zones.

Prior to the beginning of the shift, the contractor shall provide a daily work zone briefing to the police officer. For major changes in traffic patterns, advanced notification shall be provided to the police agency working the detail. This information should also be provided to the motoring public through the DOTD district and / or the LSP Troop.

The contractor shall pay for law enforcement services provided by the police officers based on the hourly wage and vehicle rate fee schedule below. The Department will reimburse the contractor monthly for the incurred cost. The contractor shall furnish time record documentation with the request for reimbursement. The provisions of Subsection 109.04 shall not apply to this reimbursement.

The agreed upon fee schedule for police officers in the work zone is as follows:

$25 per vehicle per day - vehicle use fee

$40 per hour per officer (one officer per vehicle) (minimum 2 hours).

RAILWAY-HIGHWAY PROVISIONS: Subsection 107.08 of the 2006 Standard Specifications is amended as follows.

Heading (n) is amended to include the following. The required Railroad Protective Liability Insurance shall be purchased on behalf of Canadian National Railroad.

Paragraph (n)(3) is deleted and the following paragraph substituted:

NORMAL COVERAGE (other than AMTRAK)

(1), (2) AND (3)

Combined Single Limit for Bodily Injury Liability and
Property Damage Liability: $2,000,000 per occurrence,
Physical Damage to Property: $2,000,000 per occurrence,
Aggregate Limit: $6,000,000 for the term of the policy

AMTRAK COVERAGE

(1), (2) AND (3)

Combined Single Limit for Bodily Injury Liability and
Property Damage Liability: $6,000,000 per occurrence,
Physical Damage to Property: $6,000,000 per occurrence,
Aggregate Limit: $12,000,000 for the term of the policy

The ratio of the estimated cost of operations within the Railway's property to the total estimated project cost is 0.1 percent. No direct payment will be made for providing the required insurance coverages.

A Temporary Occupancy Agreement / Right of Entry Permit, which is to be negotiated between the Canadian National Railroad and the successful bidder, will be available thru the Project Engineer's office.

PROSECUTION OF WORK (12/08): Subsection 108.04, Prosecution of Work of the Standard Specifications as amended by the supplemental specifications thereto, is further amended as follows.

108.04 PROSECUTION OF WORK.

Subpart (a), General is deleted and the following substituted.

(a) General: The contractor shall provide sufficient materials, equipment and labor to complete the project in accordance with the plans and specifications within the contract time. If the completed work is behind the approved progress schedule, the contractor shall take immediate steps to restore satisfactory progress and shall not transfer equipment or forces from uncompleted work without prior notice to, and approval of, the engineer. Each item of work shall be prosecuted to completion without delay. If prosecution of the work is discontinued for an extended period of time, the contractor shall give the engineer written notice at least 24 hours before resuming operations. The contractor's progress will be determined monthly at the time of each partial estimate, and will be based on the total amount earned by the contractor as reflected by the partial estimate. If the contractor's progress is behind more than 20 percent behind the elapsed contract time, the contractor may be notified that he is not prosecuting the work in an acceptable manner. If requested by the Department the contractor must meet with and provide the project engineer with an acceptable written plan which details how the contractor will re-gain lost progress and prosecute remaining work. If the contractor's progress is more than 30 percent behind the elapsed contract time, the contractor and the surety will be notified that he is not prosecuting the work in an acceptable manner. The contractor must meet with and provide the project engineer with an acceptable written plan which details how the contractor will re-gain lost progress and prosecute remaining work.

Subpart (b), Disqualification is deleted and the following substituted.

(b) Disqualification: A contractor who is in default in accordance with Subsection 108.09(a)(1) of and progress is deficient by 10 percent or more shall be immediately disqualified. The contractor shall remain disqualified until the project has received a final inspection and has been recommended for final acceptance. Should the surety or the Department take over prosecution of the work, the contractor shall remain disqualified for a period of one year from the completion of the project, unless debarment proceedings are instituted.

During the period of disqualification, the contractor will not be permitted to bid on contracts nor be approved as a subcontractor on contracts. Any bid submitted by the contractor during the period of disqualification will not be considered and will be returned.

PAYMENT ADJUSTMENT (05/06): Section 109, Measurement and Payment of the Standard Specifications is amended to add the following.

This project is not designated for payment adjustments for asphalt cements or fuels.

TEMPORARY TRAFFIC CONTROL (03/09): Section 713 of the 2006 Standard Specifications and the Supplemental Specifications is amended as follows:

Subsection 713.04, Temporary Signs and Barricades, is amended to include the following:

(d) Project Signs: The contractor shall furnish, install, maintain, and upon completion of the project remove "project signs" in accordance with the following requirements.

Project signs shall conform to the requirements of Section 713 and the project sign detail contained elsewhere herein. Shop drawings will be furnished to the successful bidder by contacting the Department's Traffic Services Sign Shop at (225) 935-0121 or (225) 935-0142.

Project signs shall be required at the beginning and end of the project and shall follow sign G-20-1, "Road Work Next 'X' Miles", or as directed by the engineer.

Payment for project signs shall be included in the contract unit price for Item 713-01 Temporary Signs and Barricades.

Payment for all project signs within this subsection shall include all labor, materials, tools, and equipment required to complete the work and shall be included in the contract unit price for Item 713-01 Temporary Signs and Barricades.

PLASTIC PAVEMENT MARKINGS (09/07): Section 732 of the 2006 Standard Specifications and the supplemental specifications thereto, is amended as follows.

Subsection 732.03, Construction Requirements for Plastic Pavement Marking Material.

Heading (a) is amended as follows.

The first paragraph is deleted and the following substituted.

(a) Equipment for Standard (Flat) Thermoplastic Marking Material: The application equipment shall consist of an extrusion die or a ribbon gun that simultaneously deposits and shapes lines at a thickness of 90 mils (2.3 mm) or greater on the pavement surface. When restriping onto existing thermoplastic markings, only a ribbon gun shall be used. Finished markings shall be continuous and uniform in shape, and have clear and sharp dimensions. Applicators shall be capable of producing various widths of traffic markings. Applicators shall produce sharply defined lines and provide means for cleanly cutting off stripe ends and applying broken lines. The ribbon extrusion die or shaping die shall not be more than 2 inches (50 mm) above the roadway surface during application. A spray application will only be allowed when applying 40 mil (1.0 mm) thermoplastic.

Heading (e) is deleted and the following substituted.

(e) Application of Surface Primer: A single component surface primer will be required prior to placement of preformed plastic markings over an existing painted stripe, over oxidized asphalt, or when striping over existing thermoplastic on portland cement concrete surfaces unless otherwise directed by the engineer. A two component epoxy primer sealer will be required prior

to placement of thermoplastic materials on portland cement concrete surfaces unless otherwise directed by the engineer.

ITEMS S-001 AND S-002, CONDUCTOR, FIBER OPTIC SIGNAL INTERCONNECT TRUNK LINE CABLE (72 SM) and FIBER OPTIC DROP CABLE, 12 FIBER, (SINGLE-MODE): This section includes the furnishing, installing and testing of fiber optic interconnect (communications) cable, equipment and materials related to the fiber-optic components of the closed loop communication system. This fiber shall accommodate traffic signal and surveillance camera communications as shown on the plans.

This stranded loose tube cable design shall be used as the main cable type between controller cabinets, cameras, signs or other devices. It shall also be used to connect these devices to LA DOTD and other locations as detailed in the plans. The cable configuration shall be dictated by the particular communication path, data rate, and distance of the optical path. Three possible designs are all single-mode (SM) fiber, all multi-mode (MM) fiber, or a hybrid design containing multi-mode and single-mode fiber. In the case of a stranded loose tube hybrid design, single-mode & multi-mode fibers shall not occupy the same buffer tube. Single-mode tubes shall be placed in the first available tubes in the cable (i.e., blue, orange, etc) based on cable design, multi-mode tubes shall follow. For this project, a single-mode trunk cable 72 fiber count (SM) and single-mode drop cable 12 fiber count (SM) shall be installed as shown on the plans.

General Considerations

The cable shall be an accepted product of the United States Department of Agriculture Rural Utilities Service (RUS) 7 CFR 1755.900 and meet the requirements of ANSI/ICEA Standard for Fiber Optic Outside Plant Communications Cable, ANSI/ICEA S-87-640-1999. In addition, the cable shall meet all requirements stated in this specification.

The cable(s) shall be all-dielectric stranded loose tube design. For fiber counts < 24 fibers, a 3 place configuration with 2 buffer tubes and a central member under a common round jacket, providing it meets all requirements contained herein, shall be acceptable.

The cable(s) shall be new, unused and of current design and manufacture.

The cabled fiber and cable provided shall come from the same manufacturer to ensure comprehensive technical and warranty support.

Fiber Specifications

All fibers in the cable must be usable and meet required specifications.

Each optical fiber shall be sufficiently free of surface imperfections and inclusions to meet the optical, mechanical, and environmental requirements of this specification.

Each optical fiber shall consist of a doped silica core surrounded by a concentric glass cladding. The fiber shall be a matched clad design.

Each optical fiber shall be proof tested by the fiber manufacturer at a minimum of 100 kpsi (0.7 GN/m^2).

The fiber shall be coated with a dual layer acrylate protective coating. The coating shall be in physical contact with the cladding surface.

The attenuation specification shall be a maximum value for each fiber at 23 ± 5 °C.

The single-mode fiber utilized in the optical fiber cable shall meet EIA/TIA-492CAAA, "Detail Specification for Class IVa Dispersion-Unshifted Single-Mode Optical Fibers," and ITU recommendation G.652, "Characteristics of Single-Mode Optical Fiber Cable."

Parameter	Single-Mode Fiber
Typical Core Diameter	8.3 μm (characterized value)
Cladding Diameter	125.0 ± 0.7 μm
Core-to-Cladding Concentricity	≤ 0.5 μm
Cladding Non-Circularity	$\leq 1.0\ \%\quad \left(1-\frac{\text{Minimum Cladding Diameter}}{\text{Maximum Cladding Diameter}}\right)\times 100$
Coating Diameter	245 ± 5 μm
Attenuation (maximum)	0.35/0.25 dB/km @ 1310/ 1550nm
Attenuation Uniformity	No point discontinuity ≥ 0.10 dB at either 1300 nm or 1550 nm
Attenuation at the Water Peak	At 1383 ± 3 nm shall not exceed 2.1 dB/km
Cutoff Wavelength (cabled) (λ_{ccf})	< 1260 nm
Mode Field Diameter	9.40 ± 0.4 μm at 1310 nm 10.40 ± 0.8 μm at 1550 nm
Macrobend Attenuation	1 turn of fiber around a 32 ± 2 mm diameter mandrel ≤ 0.50 dB at 1550 nm. 100 turns of fiber around a 75 ± 2 mm diameter mandrel ≤ 0.05 dB at 1310 nm and ≤ 0.10 dB at 1550 nm.
Zero Dispersion Wavelength (λ_0):	1302 nm ≤ λ_0 ≤ 1322 nm
Zero Dispersion Slope (S_0)	≤ 0.092 ps/(nm²•km)
Maximum dispersion	≤ 3.55 ps/(nm•km) 1285 nm - 1330 nm ≤ 18 ps/(nm•km) at 1550 nm
Fiber Curl	≥ 4.0 m radius of curvature
Fiber Polarization Mode Dispersion (PMD)	$\leq 0.5\ ps/\sqrt{km}$

The multi-mode fiber utilized in the optical fiber cable shall meet EIA/TIA-492AAAA-A-1997, "Detail Specification for 62.5 μm Core Diameter/125 μm Cladding Diameter Class Ia Graded-Index Multi-mode Optical Fibers."

Parameter	Multi-Mode Fiber
Typical Core Diameter	62.5 ± 3.0 μm
Cladding Diameter	125.0 ± 2.0 μm
Core-to-Cladding Concentricity	≤ 3.0 μm
Cladding Non-Circularity	< 2.0 % $\left(1 - \frac{\text{Minimum Cladding Diameter}}{\text{Maximum Cladding Diameter}}\right) \times 100$
Core non-circularity	≤ 5 % $\left(1 - \frac{\text{Minimum Core Diameter}}{\text{Maximum Core Diameter}}\right) \times 100$
Coating Diameter	245 ± 5 μm
Attenuation (maximum)	3.50/1.0 dB/km @ 850/1300 nm
Attenuation Uniformity	No point discontinuity ≥ 0.20 dB at either 850 nm or 1300 nm
Attenuation at the Water Peak	The attenuation coefficient at 1380 nm shall not exceed the attenuation coefficient at 1300 nm by more than 1.0 dB/km.
Macrobend Attenuation	100 turns of fiber around a 75 ± 2 mm diameter mandrel ≤ 0.5 dB at 850 nm or 1300 nm.
IEEE 802.3 Performance	Shall support laser-based Gigabit Ethernet (GbE) 1000BASE-SX operating window (850 nm) at 500 meters, 1000BASE-LX operating window (1300 nm) at 1000 meters without the use of mode conditioning (a.k.a., offset) patch cords.
Minimum Cabled RML Bandwidth	385 MHz•km at 850 nm
Minimum LED Bandwidth	200/500 MHz•km at 850/1300 nm
Numerical Aperture	0.275 ± 0.015

Specifications for Outdoor Cable Construction

Optical fibers shall be placed inside a loose buffer tube. The nominal outer diameter of the buffer tube shall be 3.0 mm, regardless of the fiber count. Each buffer tube shall contain up to 12 fibers. The fibers shall not adhere to the inside of the buffer tube.

Each fiber shall be distinguishable by means of color-coding in accordance with TIA/EIA-598-A, "Optical Fiber Cable Color Coding." The fibers shall be colored with ultraviolet (UV) curable inks.

Buffer tubes containing fibers shall be color-coded with distinct and recognizable colors in accordance with TIA/EIA-598-A, "Optical Fiber Cable Color Coding."

Buffer tube colored stripes shall be inlaid in the tube by means of co-extrusion when required. The nominal stripe width shall be 1 mm.

For cables containing more than 12 buffer tubes, standard colors are used for tubes 1 through 12 and stripes are used to denote tubes 13 through 24. The color sequence applies to tubes containing fibers only, and shall begin with the first tube. If fillers are required, they shall be placed in the inner layer of the cable. The tube color sequence shall start from the inside layer and progress outward.

In buffer tubes containing multiple fibers, the colors shall be stable across the specified storage and operating temperature range and not subject to fading or smearing onto each other or into the gel filling material. Colors shall not cause fibers to stick together.

The buffer tubes shall be resistant to external forces and shall meet the buffer tube cold bend and shrink-back requirements of 7 CFR 1755.900.

Fillers may be included in the cable core to lend symmetry to the cable cross-section where needed. Fillers shall be placed so that they do not interrupt the consecutive positioning of the buffer tubes. In dual layer cables, any fillers shall be placed in the inner layer. Fillers shall be nominally 3.0 mm in outer diameter.

The central member shall consist of a dielectric, glass reinforced plastic (GRP) rod. The purpose of the central member is to provide tensile strength and prevent buckling. The central member shall be over-coated with a thermoplastic when required to achieve dimensional sizing to accommodate buffer tubes/fillers.

Each buffer tube shall be filled with a non-hygroscopic, non-nutritive to fungus, electrically non-conductive, homogenous gel. The gel shall be free from dirt and foreign matter. The gel shall be readily removable with conventional nontoxic solvents.

Buffer tubes shall be stranded around the dielectric central member using the reverse oscillation, or "S-Z", stranding process. Water swellable yarn(s) shall be applied longitudinally along the central member during stranding.

Two polyester yarn binders shall be applied contra-helically with sufficient tension to secure each buffer tube layer to the dielectric central member without crushing the buffer tubes. The binders shall be non-hygroscopic, non-wicking, and dielectric with low shrinkage.

For single layer cables, a water swellable tape shall be applied longitudinally around the outside of the stranded tubes/fillers. The water swellable tape shall be non-nutritive to fungus, electrically non-conductive, and homogenous. It shall also be free from dirt and foreign matter.

For dual layer cables, a second (outer) layer of buffer tubes shall be stranded over the original core to form a two-layer core. A water swellable tape shall be applied longitudinally over both the inner and outer layer. The water swellable tape shall be non-nutritive to fungus, electrically non-conductive, and homogenous. It shall also be free from dirt and foreign matter.

The cables shall contain at least one ripcord under the sheath for easy sheath removal.

Tensile strength shall be provided by the central member, and additional dielectric yarns as required. The dielectric yarns shall be helically stranded evenly around the cable core. The central member and/or other strength members shall not cause the cable to have a preferential bend.

Non-armored cables shall be sheathed with medium density polyethylene (MDPE). The minimum nominal jacket thickness shall be 1.4 mm. Jacketing material shall be applied directly over the tensile strength members (as required) and water swellable tape. The polyethylene shall contain carbon black to provide ultraviolet light protection and shall not promote the growth of fungus.

The jacket or sheath shall be free of holes, splits, and blisters. The cable jacket shall contain no metal elements and shall be of a consistent thickness.

Cable jackets shall be marked with the manufacturer's name, month and year of manufacture, sequential meter or foot markings, a telecommunication handset symbol as required by Section 350G of the National

Electrical Safety Code® (NESC®), fiber count, and fiber type. In addition to these standard markings, the cable shall also be marked with "LA DOTD Traffic Signal Cable" in the same print and manner as the standard print. The actual length of the cable shall be within -0/+1% of the length markings. The print color shall be white. The height of the marking shall be approximately 2.5 mm. The location of switch back points shall be marked on the outer jacket to facilitate mid-span access. Re-marking during the manufacturing process shall not be allowed.

The maximum pulling tension shall be 2700 N (608 lbf) during installation (short term) and 890 N (200 lbf) long term installed.

The shipping, storage, and operating temperature range of the cable shall be -40°C to +70°C. The installation temperature range of the cable shall be -30°C to +70°C.

General Cable Performance Specifications

When tested in accordance with FOTP-3, "Procedure to Measure Temperature Cycling Effects on Optical Fibers, Optical Cable, and Other Passive Fiber Optic Components," the change in attenuation at extreme operational temperatures (-40°C and +70°C) shall not exceed 0.15 dB/km at 1550 nm for single-mode fiber and 0.3 dB/km at 1300 nm for multi-mode fiber.

When tested in accordance with FOTP-82, "Fluid Penetration Test for Fluid-Blocked Fiber Optic Cable," a one-meter length of unaged cable shall withstand a one-meter static head or equivalent continuous pressure of water for one hour without leakage through the open cable end.

When tested in accordance with FOTP-81, "Compound Flow (Drip) Test for Filled Fiber Optic Cable," the cable shall exhibit no flow (drip or leak) of filling and/or flooding material at 70°C.

When tested in accordance with FOTP-41, "Compressive Loading Resistance of Fiber Optic Cables," the cable shall withstand a minimum compressive load of 220 N/cm (125 lbf/in) applied uniformly over the length of the sample. The 220 N/cm (125 lbf/in) load shall be applied at a rate of 2.5 mm (0.1 in) per minute. The load shall be maintained for a period of 1 minute. The load shall then be decreased to 110 N/cm (63 lbf/in). Alternatively, it is acceptable to remove the 220 N/cm (125 lbf/in) load entirely and apply the 110 N/cm (63 lbf/in) load within five minutes at a rate of 2.5 mm (0.1 in) per minute. The 110 N/cm (63 lbf/in) load shall be maintained for a period of 10 minutes. Attenuation measurements shall be performed before release of the 110 N/cm (63 lbf/in) load. The change in attenuation shall not exceed 0.15 dB at 1550 nm for single-mode fibers and 0.3 dB at 1300 nm for multi-mode fiber.

When tested in accordance with FOTP-104, "Fiber Optic Cable Cyclic Flexing Test," the cable shall withstand 25 mechanical flexing cycles around a sheave diameter not greater than 20 times the cable diameter. The change in attenuation shall not exceed 0.15 dB at 1550 nm for single-mode fiber and 0.3 dB at 1300 nm for multi-mode fiber.

When tested in accordance with FOTP-25, "Repeated Impact Testing of Fiber Optic Cables and Cable Assemblies," except that the number of cycles shall be two at three locations along a one meter cable length and the impact energy shall be at least 4.4 Nm (in accordance with ICEA S-87-640)", the change in attenuation shall not exceed 0.15 dB at 1550 nm for single-mode fiber and 0.3 dB at 1300 nm for multi-mode fiber.

When tested in accordance with FOTP-33, "Fiber Optic Cable Tensile Loading and Bending Test," using a maximum mandrel and sheave diameter of 560 mm, the cable shall withstand a rated tensile load of 2670 N (601 lbf) and residual load of 30% of the rated installation load. The axial fiber strain shall be ≤ 60% of the fiber proof level after completion of 60 minute conditioning and while the cable is under the rated installation load. The axial fiber strain shall be ≤ 20% of the fiber proof level after completion of 10 minute conditioning and while the cable is under the residual load. The change in attenuation at residual load and after load removal shall not exceed 0.15 dB at 1550 nm for single-mode fiber and 0.3 dB at 1300 nm for multi-mode fiber.

When tested in accordance with FOTP-85, "Fiber Optic Cable Twist Test," a length of cable no greater than 2 meters shall withstand 10 cycles of mechanical twisting. The change in attenuation shall not exceed 0.15 dB at 1550 nm for single-mode fiber and 0.3 dB at 1300 nm for multi-mode fiber.

When tested in accordance with FOTP-37, "Low or High Temperature Bend Test for Fiber Optic Cable," the cable shall withstand four full turns around a mandrel of ≤ 20 times the cable diameter after conditioning for four hours at test temperatures of -30°C and +60°C. Neither the inner nor the outer surfaces of the jacket shall exhibit visible cracks, splits, tears, or other openings. The change in attenuation shall not exceed 0.3 dB at 1550 nm for single-mode fiber and 0.5 dB at 1300 nm for multi-mode fiber.

Quality Assurance Provision

All cabled optical fibers > 1000 meters in length shall be 100% attenuation tested. The attenuation of each fiber shall be provided with each cable reel.

The cable manufacturer shall be ISO 9001 registered.

Packaging

The completed cable shall be packaged for shipment on non-returnable wooden reels or steel reels. The cable shall be protected from damage with a flexible cover wrapped around the cable between reel flanges.

Top and bottom ends of the cable shall be available for testing. Both ends of the cable shall be sealed to prevent the ingress of moisture. Each reel shall have a weather resistant reel tag attached identifying the reel and cable. The reel tag shall include the following information:

Cable Number	Gross Weight
Shipped Cable Length in Feet	Job Order Number
Manufacturer Product Number	Customer Order Number
Date Cable was Tested	Manufacturer Order Number
Cable Length Markings	Item Number
a: Top (inside end of cable)	
b: Bottom (outside end of cable)	

The reel (one flange) marking shall include:

"Manufacturer"	Country of origin (e.g., USA)

An arrow indicating proper direction of roll when handling
Fork lift-handling illustration
"DO NOT SHIP REEL ON SIDE" or
"DO NOT LAY REEL ON ITS SIDE"

Each cable shall be accompanied by a cable data sheet. The cable data sheet shall include the following information:

Manufacturer Cable Number	Manufacturer Product Number
Manufacturer Factory Order Number	Customer Name
Customer Purchase Order Number	Ordered Length
Maximum Billable Length	Actual Shipped Length
Measured Attenuation of Each Fiber (for lengths > 1000 m)	Bandwidth Specification (where applicable)

Miscellaneous

The cable manufacturer shall provide installation procedures and technical support concerning the items contained in this specification.

The manufacturer shall provide a 24-hour technical assistance hotline.

Cable and fiber manufacturer shall be vertically integrated to ensure long-term reliability of the cabled fiber and to ensure comprehensive technical support and warranty support.

Fiber-Optic Drop Cable, 12 fiber Single-mode
This cable design shall be used to provide a communication path between field devices and the main trunk cable of the system. This cable design is more flexible with a much smaller bend radius than stranded loose-tube cable and shall be used in conjunction with preterminated patch panels. The technical requirements of this cable shall be the same as the trunk cable with the following exceptions.

Cable construction

Optical fibers shall be placed in a single filled loose buffer tube with a nominal diameter of 3.0mm. In the case of a hybrid design, the single-mode fibers shall be the first fiber colors in the tube. For this project, a single-mode 12 count fiber cable shall be used.

Water swellable dielectric strength members shall be applied evenly around the outside of the buffer tube for tensile strength. The dielectric strength members shall be non-nutritive to fungus and electrically nonconductive. They shall also be free from dirt and foreign matter. Water blocking shall be provided by the strength members, which shall be impregnated with a water swellable compound. The cable shall not have stiff longitudinal rods or any other component that will cause the cable to have a preferential bend.

Cables shall be sheathed with flame-retardant polyvinyl chloride (PVC). The nominal jacket thickness shall be 1.4 mm. The jacketing material shall be applied directly over the tensile strength members. The PVC shall contain carbon black to provide ultraviolet light protection and shall not promote the growth of fungus. The cable shall meet must meet the requirements of the National Electrical Code® (NEC®) Section 770. for Non-Plenum Applications - Applicable Flame Tests: ANSI/UL 1666. The cable shall be listed OFNR. The cable shall contain no metallic elements.

Drop Cable Fiber and Cable Parameters	
Parameter	Value
Multi-mode attenuation	3.5/1.0 @ 850/1300 nm
Single-mode attenuation	0.4/0.3 db/km @ 1310/1550 nm
Coated fiber diameter	245 ± 5 μm
Minimum bend radius (loaded)	10.5 mm (4.1")
Minimum bend radius (unloaded)	7.0 mm (2.8")
Tensile rating short term (Installation)	1320 N (300 lbf)
Tensile rating installed (long term)	330 N (73 lbf)
Nominal outer diameter	7.0 mm (0.28")

Installation

General Outside Plant Cable Installation- Contractor shall submit for approval a detailed construction and installation procedure covering all aspects of the construction and installation process for each specific cable type to be used on this project. Secure from the cable manufacturer the construction and installation procedures to be used on the project. The construction and installation procedure shall be submitted for review by the Project Engineer.

Cable Installation Procedures and Standards-Safety Precautions-Follow all appropriate OSHA and industry standards related to safety when working in manholes or underground vaults and when handling optical fibers.

Cable Handling-Install all fiber optic cable according to the manufacturer's recommended procedures and these specifications.

Pulling Tension-Do not exceed the maximum recommended pulling tension during installation as specified by the cable manufacturer. Prior to installation of any fiber-optic, the Contractor shall provide documentation as to how tension will be monitored during cable installation. Cable placed without provisions for tension control shall be considered unfit for use and shall be replaced at the Contractor's expense.

Allowable Bend Radius-Do not violate the minimum recommended bend radius during installation as specified by the cable manufacturer. Unless the manufacturer's recommendations are more stringent, use the following guidelines for minimum bend radius:

20 X Cable Diameter Short Term - During Installation
10 X Cable Diameter Long Term – Installed

Cable Installation Guidelines-Before the installation begins; carefully inspect the cable reels for imperfections such as nails that might cause damage to the cable as it is unreeled. Take all necessary precautions to protect reeled cable from vandals or other sources of possible damage while unattended. Any damage to the cable sections may require replacement of the entire section. Whenever unreeled cable is placed on the pavement or surface above a manhole, provide means of preventing vehicular or pedestrian traffic through the area in accordance with

the special detail entitled "Maintenance of Traffic". Use the "figure-eight" method to prevent kinking or twisting when the cable is unreeled or back-fed. Do not coil fiber optic cable in a continuous direction except for lengths of 100 ft. or less. The preferred size for the "figure-eight" is 15 feet in length, with each loop 5 feet to 8 feet in diameter. When "figure-eighting" cable, exercise care to relieve pressure on the cable at the crossover points of the eight, this may be done by placing cardboard shims at the crossover or by forming a second "figure-eight". Keep the cable continuous throughout the pull. Cable breaks are allowed only at designated splice or end points.

Cable End Sealing-After cable placement, all cable ends shall be sealed with an appropriate sized cable cap to prevent water ingress.

Slack Cable

Cable Storage-At designated intervals throughout the cable plant, pull and store excess cable slack for future terminations or splicing. Unless otherwise noted on the plans, the following are the requirements for cable storage:

For Pull Boxes Apply the following storage requirements for the indicated situations:
Trunk cable at splice locations shown on the plans (Type J junction boxes)(coiled uncut slack) - 100 ft.
Trunk cable at mid span slack storage locations (Type I junction boxes) (coiled uncut slack) - 50 ft.
Drop cable (in controller cabinet) end point-50 ft.

Properly store all cable to minimize susceptibility to damage. Maintain proper bend radius, both short and long term, during cable storage. Pull Boxes: Store the excess or slack cable in the pull box or communication box in accordance with the Plans details. Controller Cabinet-coil slack in a hand coil not to exceed the minimum bend radius of the fiber and secure with cable ties.

Cable Marking -The cable label shall be a minimum of 2" wide wrap around style with a clear film over-wrap. It shall be specifically designed for outside plant environments. Use only permanent marking pens, as recommended or provided by the manufacturer. For all cable applications, legibly print the Roadway number, cable ID number, Fiber Type, and fiber count as shown in the Plans with a permanent-marking pen as recommended by the label manufacturer and seal with a laminate covering. The following is an <u>example</u> of the cable labeling scheme:

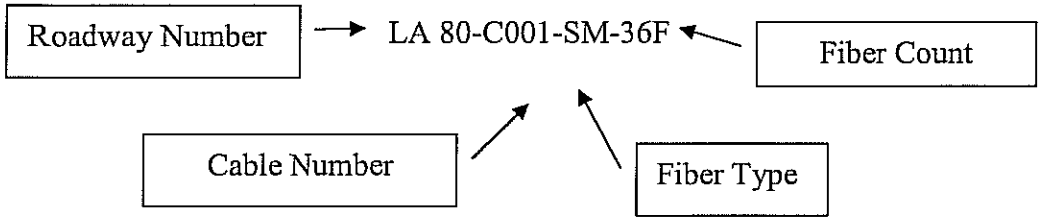

Clean the installed cable of all dirt and grease before applying any label. Follow the label manufacturer's recommended procedure for applying cable labels. Label all cables in every pull box and splice closure. Place cable labels in the following locations:

Within 18" of every cable at its entry to a pull box
Within 18" of every cable at its exit from a pull box (in the case of coiled slack)
Within 18" of every cable entry into a splice closure (underground only)
(For drop cables, label as "Drop to Intersection name/number")

Unless noted, all optical fiber splices shall be fusion splices. Mechanical splices shall not be used on this project. Splices shall be made with a fusion splicing machine capable of active fiber alignment via Local injection/detection or PAS. Maximum splice loss allowable shall be 0.10 dB.

Splices shall be protected using an industry standard 60mm heat shrink protection sleeve incorporating a stainless steel rod.

Protection sleeves shall be shrunk using a heat-shrink oven; no open flame, heat gun or other device shall be used.

Identification Tape

All underground conduit installed by open trenching methods shall be identified by conduit identification tape. Identification tape shall be minimum six (6") inches wide and be of a plastic-based non-deteriorating non-color-fading material capable of stretching at least six hundred percent (600 %) in length before breaking. Identification tape shall be colored in accordance with American Public Works Association orange for communications and shall be continuously emblazoned with black non-fading ink with the message "CAUTION FIBER OPTIC TRAFFIC SIGNAL CABLE BURIED BELOW" in minimum two (2") inch high block letter. Identification tape shall be installed for the entire length of trench directly above the conduit(s). One (1) length of identification tape shall be installed for all parallel conduits within twelve (12") inches of each other; parallel conduits more than twelve (12") inches apart shall have two (2) or more identification tapes as needed. The identification tape shall be continuous from conduit termination point to termination point and shall enter pull boxes with the conduit. The identification tape shall be at a depth of twelve (12") inches below finished grade. No separate payment will be made for Identification tape, but shall be provided by the Contractor and included in the amount bid for other pay items.

Tracer Wire

All Conduit shall include a #10 stranded tracer wire for all conduit used for the installation of fiber optic cables. No separate payment will be made for Tracer wire, but shall be provided by the Contractor as part of pay item S-001 and S-002 for Fiber Optic Cable.

Testing

The Contractor shall notify the Project Engineer in writing a minimum of seven (7) days before the scheduled start of any tests to permit attendance of the appropriate personnel. The Contractor shall be totally responsible for the documentation of the results of all tests. The documented test results shall be submitted to the Project Engineer for approval within fifteen (15) days following completion of the test. During the fiber optic conductor cable tests, all transient suppression devices shall be disconnected. If any test is failed, repairs or cable replacement shall be made by the Contractor and the entire test series for the fiber optic cable shall be repeated. The cost or repairs including the replacement or reinstallation of cable shall be absorbed by the Contractor. All test equipment shall be provided by the Contractor and all tests shall be conducted in the presence of the Project Engineer. The Contractor shall perform the tests and document the test results. When the tests are completed, whether successful or not, the test results shall be furnished to the Project Engineer. The tests shall be conducted for all fibers including spares and shall include all field terminations. Test procedures shall be submitted to the Project Engineer for approval prior to testing. No separate payment will be made for testing, but shall be provided by the Contractor as part of pay item S-001 and S-002 for Fiber Optic Cable.

Pre-installation OTDR Testing

The Contractor shall test all fibers in each reel of cable prior to installation. This testing is for both continuity and attenuation. The tests shall be conducted at 1550nm for single-mode fibers. The testing shall be performed by a qualified technician using an Optical Time Domain Reflectometer (OTDR) via a "pigtail" splice. The pigtail (pulse suppressor) shall be a minimum of 100 meters to allow the entire length of fiber under test to be visible on the trace. The resultant OTDR trace(s) shall reflect overall length, attenuation expressed in dB/km, and shall indicate no point discontinuity >0.10 dB. All test results shall be within ±0.02 dB/km of factory supplied attenuation measurements for single-mode and multi-mode fibers. Testing shall be conducted in one consistent direction only. Resulting OTDR traces shall be supplied to the Project Engineer by the Contractor in hard copy and electronic format (1.44mb 3.5" disk) prior to installation of the cable. The Contractor may opt to accept factory results and install cable at his own risk. However, if cable should fail after installation and prior to acceptance of the system, the Contractor shall remove failed cable and reinstall new cable at his sole expense. In either case, On-the-reel test results shall be provided to the Project Engineer for each cable installed prior to cable installation.

Following installation, each section of the installed cable shall be tested for continuity and attenuation as indicated above. The traces shall demonstrate that no damage has occurred during installation and that any splices meet the requirements herein. The traces shall be included in the documentation package provided at the conclusion of the contract.

Post installation Testing

Only connectorized spans will be tested for final End-to-End attenuation (power loss). The testing shall be performed at 850 nm and 1300nm for multi-mode and at 1300nm and 1550nmfor single-mode fibers. The testing shall be conducted using "hand-held" optical test sets and shall be conducted using a two jumper reference. The testing shall be in both directions.

The results shall be tabulated and be included in the documentation package provided to the Project Engineer at the conclusion of the contract. Overall loss for each link shall not exceed the cumulative specified losses of the components in the link. (EXAMPLE, @ 850nm, a 1 km link with 2 splices and a connector on each end shall not exceed 5.0dB ((3.5dB + .25dB + .25dB +.5dB + .5dB)). At the conclusion of the contract, 2 copies of system documentation package shall be provided. It shall include as a minimum:

- Post installation OTDR traces for each fiber.
- End-to-End Attenuation measurement for each fiber.
- A splice plan showing the location and configuration of any splices in the system as well as how the transmission scheme is set up.
- Reference manuals for equipment provided.

No additional payment shall be made for testing of fiber.

Contractor Warranty and Maintenance

Any and all warranties and guarantees shall comply with section 104.05 of the latest edition of the Louisiana Standard Specifications For Roads and Bridges.

As Built Documentation

Provide four copies of as built documentation of all work provided in accordance with this specification prior to Final Acceptance of the Project. As a minimum, include in the as built documents the following:
Operator's manual detailing operating instructions for each different type of equipment installed.
Maintenance procedures manual detailing manufacturers preventative and corrective maintenance procedures for each different type or model of equipment installed.
System connectivity Diagrams detailing fiber-optic and electrical system interconnection cables. For the fiber-optic system, footage marks at each splice closure for all cables shall be included in the diagrams. Location and amount of coiled or aerial slack shall also be shown on the diagram. Any deviation from the fiber-optic splice plan shall be detailed on the diagrams. Drawings shall be in 11" x 17" (A3) format. The Project Engineer may at his discretion, provide the base route drawings in electronic format for annotation. Diagrams shall be provided in hard copy and electronic format (CD-RW) to the Project Engineer. Marked-up project plans shall not be acceptable.
As Built Drawings that detail the final installation route of all cable to include depth of conduit, exact pull box locations.

All project documentation shall be organized in a logical orderly manner. Provide documentation in bound form in 3 ring binders. Deliver as built documentation no later than 30 days after the completion of the installation.

No additional payment shall be made for As Build documentation.

SUBMITTALS

Prior to any work, obtain approval from the Project Engineer for the products and procedures to be used or furnished on the project. Submittal data shall be organized in an orderly manner; separate data by material type. Provide four copies of the submittal package to the Project Engineer. The following table details the submittal requirements for the equipment for a particular pay item. The table is a guideline and does not relieve the Contractor from submitting additional information to form a complete submittal package.

Material	Catalog Cuts	Mfg. Specs	Factory Test	Install. Docs.	Test Schedule	Test Plan	Test Reports	Submittal Due Date (Cal. Days after NTP)
FO Cable (Trunk and Drop)	X	X	X	X	X	X	X	30 Days
Splice Closure	X	X	X	X				30 Days
Splice Tray	X							30 Days
Preterminated Patch Panel	X	X	X				X	30 Days
Fusion Splice	X	X					X	30 Days
FO Patch Cords	X	X	X					30 Days
Ethernet Switch	X	X						30 Days
Cable Labels	X	X		X				30 Days

METHOD OF PAYMENT

MEASUREMENT

S-001 CONDUCTOR, TRUNK FIBER OPTIC CABLE 72 COUNT SINGLE-MODE
Fiber Optic Trunk Cable, 72 fiber Single-Mode shall be measured, per linear foot and shall include all labor, materials, equipment, labeling, connectors, brackets, splicing, fiber, testing, etc. and all incidentals necessary for a complete and operational fiber optic communications system as described in this specification and on the plans. Fiber Optic cable shall be measured for payment by the amount actually installed, complete, functional, and accepted. Specified and approved fiber slack at the splice closures, controller cabinets and junction boxes will be included in this measurement. Additional slack not shown on plans or included in these specifications and not approved by Project Engineer will be no direct pay. No separate measurement will be allowed for coordination with utility companies for installation of fiber optic cable or for special brackets or other devices or for changes in anticipated construction

methods to accommodate or avoid utilities. Identification tape and tracer wire shall be installed with fiber as part of this pay item. Fusion splices shall be included as part of this pay item

S-002 CONDUCTOR, FIBER DROP CABLE, 12 COUNT SINGLE-MODE
Fiber Optic Drop Cable, 12 fiber Single-Mode shall be measured, per linear foot and shall include all labor, materials, equipment, labeling, connectors, brackets, splicing, fiber, testing, Identification tape and tracer wire etc. and all incidentals necessary for a complete and operational fiber optic communications system as described in this specification and on the plans. Fiber Optic cable shall be measured for payment by the amount actually installed, complete, functional, and accepted. Specified and approved fiber slack at the splice closures, controller cabinets and junction boxes will be included in this measurement. Additional slack not approved will not be part of this pay item. Additional slack not shown on plans or included in these specifications and not approved by Project Engineer will be no direct pay. No separate measurement will be allowed for coordination with utility companies for installation of fiber optic cable or for special brackets or other devices or for changes in anticipated construction methods to accommodate or avoid utilities. Identification tape and tracer wire shall be installed with fiber as part of this pay item. Fusion splices shall be included as part of this pay item.

PAYMENT

Payment will be made under:

Item S-001, Conductor, Fiber Optic Signal Interconnect Trunk Line Cable (72 SM), per linear foot.

Item S-002, Fiber Optic Drop Cable, 12 Fiber, (Single Mode), per linear foot.

ITEM S-003, "BURIED TRAFFIC FIBER OPTICS CABLE" SIGN (4" X 12"): This item shall consist of the Contractor furnishing and installing warning signs along fiber interconnect routes as shown on the plans. The sign shall read, "Caution, Buried Traffic Fiber Optics Cable, Before Digging Call LA DOTD Traffic Operations Section, 935-0100," as shown on the plans.

The size of the sign shall be 4" by 12" and shall be located along fiber optic routes on the concrete collar of each junction box. Each sign shall be mounted on a 5 foot u-channel post.

SUBMITTALS

Contractor shall provide product submittal to Project Engineer for approval prior to ordering signs.

METHOD OF PAYMENT

MEASUREMENT

Buried Traffic Fiber Optics Cable signs shall be measured in units of each and will be paid for at the contract unit price per each. The price shall be full compensation for furnishing, installing, mounting components, connection and testing all materials; for final cleanup; and for all labor, equipment, tools and incidentals necessary to complete the work

PAYMENT

Payment will be made under:

Item S-003, "Buried Traffic Fiber Optics Cable" Sign (4"x12"), per each.

ITEM S-004, SPLICE ENCLOSURE: Splice closures shall be used for through, branch or drop splice locations, underground as noted on the plans. All fiber splice locations shall be approved prior to installation and shall only occur at locations shown on the plans unless approved otherwise. Three sizes of splice closures are possible. Type S splice closure shall have capacity of up to 48 single fiber splices in four 12-fiber splice trays. Type M splice closure shall have a capacity of up to 144 single fiber splices in four 36-fiber splice trays. Type L splice closure shall have a capacity of up to 288 single fiber splices in eight 36 fiber splice trays. All closures sizes shall accommodate a minimum of six cable entries in one end.

The closure shall be comprised of two end plates and two glass-filled high-density thermoplastic shells. The thermoplastic shells shall have a permanently installed neoprene gasket and shall not require any additional material for re-entry. The closing hardware shall be captive to the top shell. The torquing sequence shall be molded into the shells. The top shell shall have a factory installed air valve port.

One end plate shall have six pre-molded cable ports in a three-section configuration; the opposite end plate shall be solid. The three section end plate shall have four entry ports that will accommodate up to a 7/8" (22 mm) cable and two entry ports that will accommodate up to a 3/4" (32 mm) cable. Weather resistant urethane grommets shall be available for both the 3/4 and 7/8 inch ports to allow the installation of smaller diameter drop cables and shall have a minimum of 3 cable entries. These grommets shall be used for any drop cable entry (cable diameter 0.27"-0.31"). The end cap shall provide individual central member tie off points and achieve a watertight seal without the use of sealing washers. End plates shall have accommodations for external grounding of shielded cables.

All exposed metal on the closure shall be machined stainless steel. The Type S closure shall have a nominal diameter of 6" and a nominal length of 17". The Type M closure shall have a nominal diameter of 6" and a nominal length of 22". The Type L closure shall have a nominal diameter of 8.5" and a nominal length of 22". The end plates for the Type S, M and L closures shall be interchangeable. The closure shall require no special tools; drill kits, torches or power supplies for assembly, reentry or additional cable entries. The closure shall be suitable for handhold or buried applications. No aerial closure installations shall be installed on this project unless approved otherwise. The closure shall be tested in accordance with GR-771-core, meet all requirements therein, and shall have test data demonstrating compliance. The closure shall not require encapsulation. The closure shall be provided with plugs for unused ports. The closure shall be provisioned with a storage compartment kit for loose tube mid-span splicing applications. (Preformed Line Products Pup (8006622 & Coyote Closures 8006560/8006561 or approved equal.)

Fiber optic splice tray 36 fiber
The splice tray shall be used in conjunction with the splice enclosure, shall be from the same manufacturer, and shall be fully compatible with the splice enclosure supplied. The splice tray shall be of molded thermoplastic construction with a clear plastic hinged cover. The splice tray shall have removable tabs around the perimeter of the fiber compartment for fiber routing. Each splice tray shall include tie wraps, felt strips, and a labeling device. The 12 fiber splice tray shall have the capacity 12 individual heat shrink protected fusion splices; nominal dimensions of 6-7/8" L x 5-1/2" W x 7/16" H and be used in conjunction with type S closure. The 36 fiber splice tray shall have the capacity for 36 individual heat shrink protected fusion splices in three elastomer 12-count splice blocks; splice tray nominal dimensions of 11" L x 5-1/2" W x 7/16" H. and be used in conjunction with type S closure. For the 36-fiber tray, regardless of the number of splices made in the splice tray, elastomer blocks shall be installed for up to 36 fibers. (Preformed Line Products 80806033 & 80805110 or approved equal)

Splice trays, heat shrink protection sleeves and ancillary materials necessary to complete construction per the plans shall be considered incidental to the splice closure.

Unless noted, all optical fiber splices shall be fusion splices. Splices shall be made with a fusion splicing machine capable of active fiber alignment via Local injection/detection or PAS. Maximum splice loss allowable shall be 0.10 dB.

Splices shall be protected using an industry standard 60mm heat shrink protection sleeve incorporating a stainless steel rod.

Protection sleeves shall be shrunk using a heat-shrink oven; no open flame, heat gun or other device shall be used.

Splice Closure installation

Follow manufactures recommended procedures for closure installation.
Unless detailed in the plans, all non-endpoint splices are to be made using mid-span access techniques. Only fibers to be spliced shall be cut, remaining fibers occupying the same buffer tube shall be stored uncut in the splice tray. Un-cut buffer tubes shall be stored in the closure in an orderly manner and be accessible for future splicing operations. If a prescribed buffer tube length for mid-span splicing is not recommended by the manufacture, two times the recommended strip length for through splices shall be stored in the closure. For mid-span splice locations, the trunk cable shall enter the two outside lower ports on the closure; the drop cable shall enter the middle port through one of the three available grommet entry ports.
All buffer tubes shall be labeled within 2" of the splice tray using a permanent marker or wrap around write-on labels. Labels shall designate route of the fiber (for example, "trunk north", "drop cable", etc.). In addition, all splices in splice trays shall be labeled using the scheme supplied by the manufacturer of the splice tray. The labeling on the tray shall designate left side fiber/tube/cable and right side fiber/tube/cable. After splicing operations are complete, a flexible sealant (RTV) is to be applied to the heat shrinks. A clear plastic film shall be used to cover the sealant and heat shrinks to keep the sealant from making contact with fibers or the splice tray

cover. A calibrated torque wrench shall be used for final assembly of the splice closure. Flash test per the manufacturers recommended method.

METHOD OF PAYMENT

MEASUREMENT

Splice Closures shall be measured for payment by the actual number of fiber optic splice closure Type M units installed, tested and accepted. Any fiber optic splices, fusion splices and splice trays required shall be included as part of this for payment item. This item includes splices completed, installed, tested and accepted. This item includes Splice closures completed, installed, tested and accepted.

PAYMENT

Payment will be made under:
Item S-004, Splice Enclosure, per each.

ITEM S-005, PRETERMINATED PATCH PANEL: The Preterminated Patch Panel in conjunction with a drop cable serves as the attachment point from the controller cabinet to the trunk cable.

The Preterminated Patch Panel shall be comprised of a factory terminated housing and a length of drop cable. The Patch Panel shall be an epoxy filled ABS Plastic housing with nominal dimensions of 10.4" long, 1.5 " wide and overall depth of 1.4" from coupler tip to the base of the unit. The Patch Panel shall have six duplex SC SM couplers with ceramic inserts vertically arrayed along the length of the housing. The couplers shall be configured in a stair-stepped arrangement to facilitate easy access to each coupler pair. Each coupler port shall have a label affixed to designate the port number. The connectors on the inside of the housing shall be factory terminated to a PC finish (> -40dB) with a maximum insertion loss of 0.40dB. The inside of the housing shall be filled with an epoxy to permanently secure the connectors and the cable on the inside of the housing. The housing shall incorporate a 2.5-inch strain relief boot around the exiting drop cable to provide bend radius protection. The housing shall have integrated mounting notches for field mounting.

Each Preterminated Patch Panel shall be provided with factory test results for back reflection and insertion loss. This test report shall reference the serial number of the patch panel. The test report shall be provided to the Project Engineer after installation. (Fiber Connections Gator Patch GP2J012FN-Bxx where xx represents the length of the drop cable in meters or approved equal)

The Preterminated patch panel shall be shipped coiled or on a spool, in either case the free end of the cable shall be on the top end of the coil or spool.

METHOD OF PAYMENT

MEASUREMENT

Preterminated patch panels shall be measured for payment on the actual number of preterminated patch panels 12f SC Duplex Single-Mode installed, splices made and tested and accepted. Because the length of each assembly varies depending on the location of the splice point, payment for the drop cable will be made in pay item S-002. However, the patch panel and drop cable are to be installed as a unit.

PAYMENT

Payment will be made under:
Item S-005, Preterminated Patch Panel, per each.

ITEM S-006, PATCH CORDS: Any patch cords used for system configuration shall be compatible with fiber types and connectors specified herein. Multi-mode patch cords shall be orange in color; single-mode patch cords shall be yellow in color. All cordage shall incorporate a 900um buffered fiber, aramid yarn strength members, and an outer jacket. Patch cords may be simplex (1 fiber) or duplex (2 fiber), depending on the application. Simplex patch cords shall be constructed of 3.0mm OD cordage, Duplex patch cords shall be constructed of "zip cord" cordage with a nominal diameter of 2.0mm x 4.0mm. All patch cords will feature factory terminated, heat cure ceramic ferrule connectors. Strength members of the cordage shall be crimped to the connector body. Insertion loss for each connector @ 1300nm shall be <0.40 dB for multi-mode connectors. Insertion loss for each connector @ 1310nm shall be <0.40 dB for single-mode connectors. Return loss for single-mode connectors shall be > -40dB. Patch cords shall have part number, manufacturer, and Lot number affixed to on the jacket of the assembly. Test measurements shall be documented and shall be included with the packaging of each assembly. SC/LC duplex patch cords shall have contrasting boot colors at each end of the assembly to designate transmit and receive functions. For duplex patch cords, a user-installed clip to fix polarity for LC and SC connectors shall be provided. The cable assembly manufacturer shall be ISO 9001 Certified.

All patch cords for this project shall be single mode, four (4) fibers per patch cord, SC (at patch panel) and LC (at the Ethernet switch) connected, with a minimum length of 10 feet and maximum length as required.

METHOD OF PAYMENT

MEASUREMENT
Patch cords shall be measured for payment by the actual number of patch cord single mode 4F SC LC units installed, tested and accepted.

PAYMENT

Payment will be made under:
Item S-006, Patch Cords, per each.

ITEM S-007, ETHERNET SWITCH, CAT5 CABLE: Specifications for a Field Hardened Gigabit Ethernet Switch

Overview

This guide form specification intended for those designing or specifying the use of an Ethernet LAN in an ITS / Transportation application. These specifications are used when Ethernet is used in harsh environments, such as those experienced in traffic control cabinets.

The environmental guidelines given in this specification have been taken from the following standards:

1. NEMA TS 2 1998 (Section 2.2.8)

2. IEC 61850-3 (2002).

3. IEEE P1613.

Definitions

Ethernet Switch: An intelligent hub device which learns the addresses of all connected devices on all ports and switches Ethernet frames accordingly to the appropriate port.

DUT: "Device Under Test" will refer to either an Ethernet Hub or Ethernet Switch.

Port: A specific interface of the DUT with the external electromagnetic environment (see Figure 1)

Figure 1: Port Types

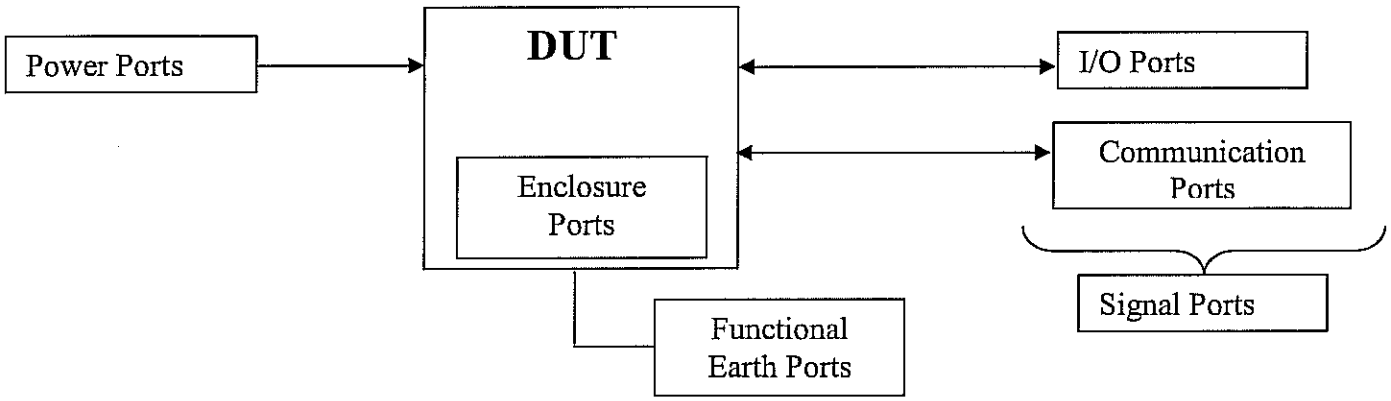

Power Port: Port for the power supplied to the DUT.

Signal Port: Port for I/O (input/output) connections or communications connections to the DUT.

Enclosure Port: Physical boundary of the DUT through which EMI fields may radiate or impinge on.

Functional Earth Port: Cable port intended for connection to earth for purposes other than electrical safety.

Immunity to EMI and Electrical Transients

IEC 61850-3 EMI Immunity Requirements

The DUT shall comply with the EMI immunity related type tests specified in IEC 61850-3 and summarized below in Table 1.

Table 1: IEC 61850-3 EMI Immunity Type

IEC 61850-3 (61000-6-5) Communications Networks and Systems in Substations (Jan 2002)				
TEST	Description		Test Levels	Severity Levels
IEC 61000-4-2	ESD	Enclosure Contact	+/- 6kV	3
		Enclosure Air	+/- 8kV	3
IEC 61000-4-3	Radiated RFI	Enclosure ports	10 V/m	3
IEC 61000-4-4	Burst (Fast Transient)	Signal ports	+/- 4kV @ 2.5kHz	x
		D.C. Power ports	+/- 4kV	4
		A.C. Power ports	+/- 4kV	4
		Earth ground ports[3]	+/- 4kV	4
IEC 61000-4-5	Surge	Signal ports	+/- 4kV line-to-earth, +/- 2kV line-to-line	4
		D.C. Power ports	+/- 2kV line-to-earth, +/- 1kV line-to-line	3
		A.C. Power ports	+/- 4kV line-to-earth, +/- 2kV line-to-line	4
IEC 61000-4-6	Induced (Conducted) RFI	Signal ports	10V	3
		D.C Power ports	10V	3
		A.C. Power ports	10V	3
		Earth ground ports[3]	10V	3
IEC 61000-4-8	Magnetic Field	Enclosure ports	40 A/m continuous, 1000 A/m for 1 s	N/A
IEC 61000-4-29	Voltage Dips & Interrupts	D.C. Power ports	30% for 0.1s, 60% for 0.1s, 100% for 0.05s	N/A
		A.C. Power ports	30% for 1 period, 60% for 50 periods	N/A
IEC 61000-4-11			100% for 5 periods, 100% for 50 periods[2]	N/A
IEC 61000-4-12	Damped Oscillatory	Signal ports	2.5kV common, 1kV differential mode @ 1MHz	3
		D.C. Power ports	2.5kV common, 1kV differential mode @ 1MHz	3
		A.C. Power ports	2.5kV common, 1kV differential mode @ 1MHz	3
IEC 61000-4-16	Mains Frequency Voltage	Signal ports	30V Continous, 300V for 1s	4
		D.C. Power ports	30V Continous, 300V for 1s	4
IEC 61000-4-17	Ripple on D.C. Power Supply	D.C. Power ports	10%	3

Operating Frequency

The operating frequency range of the DUT input operating voltage shall be 60Hz ± 3.0Hz

Power Interruption

Conditions to be met

During and after the test the DUT shall be monitored and examined for any signs of arcing or flash over. Evidence of either arcing or flash over constitutes a failure.

Upon re-application of nominal power to the power ports the DUT shall be considered to have passed if it can perform its communications functions with none of the following occurring:

a. Communications errors (i.e. frame loss or frame errors)
b. Communications interruptions or delays (other than the maximum latency times specified by the manufacturer)
c. Device latch-up requiring reset (manual or self applied)
d. Any visible device damage.

Vibration

Test Standards

The DUT shall comply with the following standard for vibration immunity:

NEMA TS 2 1998 (Section 2.2.8)
a. Vibration in each of the 3 mutually perpendicular planes.
b. Vibration frequency sweep of 5 to 30 Hz
c. Vibration strength = 0.5g
d. Duration = 3 hours, 1 hour at each plane

Conditions to be met

Upon completion of the vibration test the DUT shall be considered to have passed if:

a. Upon careful examination there are no signs of physical damage.
b. Upon the application of power the unit functions according to the manufacturer's specifications.

Shock (Impact)

Test Standards

The DUT shall comply with the following standard for shock immunity:

NEMA TS 2 1998 (Section 2.2.9)
a. Shock of no less than 10g in each of the 3 mutually perpendicular planes.

Conditions to be met

Upon completion of the shock test the DUT shall be considered to have passed if:

a. Upon careful examination there are no signs of physical damage.
b. Upon the application of power the unit functions according to the manufacturer's specifications.

Ethernet Network Standard Specifications

Ethernet is a technology that has evolved with heavy influence from the IEEE. IEEE specification exists for many aspects of an Ethernet switch. Ethernet switches should comply with the following IEEE standards as a minimum.

- IEEE-802.1D standard for media access control (MAC) bridges used with the Spanning Tree Protocol (STP);
- IEEE-802.1W (RSTP) Rapid spanning tree protocol
- IEEE 802.1Q standard for port-based virtual local area networks (VLAN);
- IEEE 802.1p message prioritization
- IEEE 802.3 standard for local area network (LAN) and metropolitan area network (MAN) access and physical layer specifications;
- IEEE 802.3u supplement standard regarding 100BaseTX/100BaseFX
- IEEE-802.3x standard regarding flow control with full duplex operation.
- IEEE-802.3Z Gigabit Standard (for switches with GB ports only)

Performance Specifications

Port Specifications

Optical Port Specifications

All fiber optic link ports shall be capable of Multi-mode or Single mode. Single mode optics shall adhere to the following:

- Medium haul (40km) single mode fiber -5…-0 dBm for, Rx sensitivity -31 dBm.

The optical ports shall be Type LC. The switch shall have minimum of two optical Gigabit ports that are capable of transmitting data at a minimum of 1000 Mbps.

Copper Port Specifications

All copper ports shall be Type RJ-45 and shall autonegotiate for speed (i.e., 10/100Base), duplexity (i.e., full or half) and polarity. All 10/100BaseTX ports shall meet the Category 5 specifications and shall be compliant with the EIA/TIA-568-A standard pinouts.

Performance / Management Specifications

The switch shall have the ability to support the Layer 2+ management features commonly found in managed nonenvironmental Ethernet® switches. These features shall include, but not be limited to:

- The STP healing rate shall meet or exceed specifications published in the *IEEE 802.1D* standard;
- The RSTP healing rate shall meet or exceed specifications published in the *IEEE 802.1W* standard;
- The switch shall support port-based VLAN's that meet or exceeds specifications as published in the *IEEE 802.1Q* standard
- The forwarding/filtering rate shall be 14,880 packets per second (PPS) for 10 Mbps and 148,800 PPS for 100 Mbps and 1,488,000 for 1000 Mbps
- The switch shall be able to support 2000 MAC addresses;
- The switch shall support, at a minimum, Version 2 of the Internet Group Management Protocol (IGMP);
- The switch shall include the electronics required for the Simple Network Management Protocol (SNMP V2). The switch shall be accessed using the resident EIA-232 management port, a telecommunication network, or the File Transfer Protocol (TFTP);
- The switch shall support management via Telnet and Web
- The switch shall support the TFTP, the Network Time Protocol (NTP), and the Simple Network Time Protocol (SNTP).
- The switch shall support Port Rate Limiting
- The switch shall include integrated AC power supply

Ethernet switch shall be Ruggedcom Ruggedswitch RS900G or approved equal.

Warranty

The Ethernet switch shall come with a 5 year warranty.

METHOD OF PAYMENT

MEASUREMENT

Ethernet switches shall be measured for payment by the actual number of units installed, tested and accepted.

PAYMENT

Payment will be made under:
Item S-007, Ethernet Switch, CAT5 Cable, per each.

ITEMS S-008 and S-009, VIDEO DETECTION DEVICE AND CONNECTION and VIDEO DETECTION SYSTEM: These items consist of furnishing all necessary equipment, labor and material to install Video Detector Device and Connection and Video Detection System as described in these specifications.

General
This specification sets the minimum requirements for a wide-area vehicle detection system that processes video images for vehicle presence, count, speed and other typical traffic parameters. The detection of vehicles passing through the field of view of an image sensor shall be available to a large variety of end user applications as simple contact closure outputs, data for traffic controller and other traffic data. This reflects the current real time detector or alarm states (on/off) or as summary traffic statistics that are reported locally or remotely. The contact closure outputs shall be provided to a traffic signal controller and comply to the NEMA (National Electrical Manufacturers Association) type C or D detector rack or a Type 170 input file rack standards.

The system architecture shall fully support networking of system components through a variety of industry standard and commercially available infrastructures that are used in the traffic industry. The serial data communications shall support direct connect, modem and multi-drop interconnects. Simple twisted pair wiring shall be supported to minimize overall system cost, improve reliability, utilizing existing infrastructure and ease of system installation and maintenance.

Both video communications and serial data communications shall optionally be interconnected over long distances through repeat and daisy chain configurations. A single serial data communications multi-drop link on twisted pair shall extend up to 2 miles (3.2 km) and include up to 24 units on a drop before the signal(s) must be repeated.

On the software application side of the network, the system shall be integrated through a client-server relationship. A communications server application shall provide the data communications interface between as few as one to as many as hundreds of machine vision processor (MVP) sensors and a number of client applications. The client applications shall either be hosted on the same PC as the communications server or may be distributed over a local area network of PC's using the industry standard TCP/IP network protocol. Multiple client applications shall execute simultaneously on the same host or multiple hosts, depending on the network configuration.

The video detection system shall easily interface to an ethernet switch in the traffic control cabinet.

System Hardware

The machine vision system hardware shall consist of 4 components: 1) a color, 16x zoom lens, Machine Vision Processor (MVP) sensor; 2) a communication interface panel; 3) and optional

cabinet interface module; and 4) an optional personal computer (PC). The PC shall host the communication server and client applications to setup, program and monitor and detection performance.

The MVP sensor shall communicate with the cabinet interface module, communications interface panel and the various PC applications using the industry-standards TCP/IP network protocol. Additionally, one or more PCs shall communicate directly or remotely to a MVP sensor network where each MVP sensor has a unique Internet Protocol (IP) address. The MVP sensor network shall support communications over a mix of media, including PSTN, CDPD dedicated twisted-pair, fiber and wireless.

The cabinet interface module shall communicate directly with up to 8 MVP sensors and shall comply with the form factor and electrical characteristics of a NEMA type C or D detector rack or a 170 input file detector rack card. For a contact closure interface to a traffic controller or other device, this interface shall accept 8 contact closure inputs (usually red and green control signals) and provide 16 contact closure output to a traffic signal controller. For a SDLC interface to a NEMA TS2 traffic controller, this interface shall display 32 phase colors and emulate up to 4 bus interface units (BIU).

The communication interface panel in the cabinet shall provide electrical termination of external cables for video, data and power to the MVP sensor. The communication interface panel shall provide transient protection to electrically protect equipment in the panel. The communications interface panel shall be available in two models: a 4-sensor model or a single-sensor model.

System Software
The MVP sensor's embedded firmware shall automatically perform a variety of diagnostic, installation, fault tolerant and vehicle detection operations. Vehicle detection shall be reliable, consistent and perform under all weather, lighting and traffic congestion conditions.

A software suite of client applications shall reside on the host client/server PC. The software suite shall support Microsoft Windows 98, or later operating systems and ME, XP, NT, 2000. Client applications shall include:

1) Network Browser: Learn a network of connected modular cabinet interface units and MVPs then show the topology in a logical hierarchical relationship.
2) Detector Editor: Create and modify detector configurations to be executed on the MVP sensor.
3) Operation Log: Extract the MVP run-time operation log of special events that have occurred.
4) Software Installer: Reconfigure one or more MVP sensors with a newer release of embedded system software.
5) Video Player: Play streaming color video from any or all sensors connected to network. Video player shall also have the ability to go in to a video wall option which will divide the PC screen in as many sensors that are opened giving the user optimal viewing. The video player shall also be able to record and play back any or all sensors being viewed. Detection performance shall be able to viewed

from the video player. In addition, speeds and classification of vehicles shall be able to be viewed from the video player.

6) Video Controller: Control the zoom, pan & tilt (optional) of the sensor it is controlling. Multiple sensors shall be able to be viewed or controlled at the same time. If multiple sensors are being viewed simultaneously, the video controller application shall allow the user to enlarge the screen in to a video wall option, which will split up the whole screen with the number of sensors being viewed.
An optional software developer's kit shall facilitate creation of custom client applications.

MVP Image Sensor

The MVP image sensor shall be integrated imaging color CCD array with wavelet CODEC technology hardware compression; optics, high-speed, image processing hardware and a general purpose CPU bundled into a sealed enclosure. The CCD array shall be directly controlled by the general purpose CPU, thus providing high video quality for detection that has virtually no noise to degrade detection performance. It shall be possible for the user to zoom the lens, as required for operation. It shall provide JPEG video compression software and a video compression co-processor so as not to interfere with detection performance while streaming video. The MVP shall provide direct real-time iris and shutter speed control. The MVP image sensor shall be equipped with an integrated 16x minimum zoom lens that can be changed using either configuration computer software or a hand-held controller. Each camera shall use an Ethernet addressing protocol so that each unit may be addressed via IP schema. Additionally, the camera shall have a failsafe mode in which detector calls are constantly placed to controller in the event of a malfunction.

The MVP sensor shall output full motion color video through the means of a differential video port in NTSC format. The differential video is transmitted over a single twisted pair.

Real-time detector performance shall be observed by viewing the video output from the sensor with overlaid flashing detector to indicate the current detection state (on/off).

The MVP shall also have the option of being attached to a pan/tilt driver that allows the user to pan, tilt and zoom the camera from within the same software package for video detection. The driver shall be able to come back to the original detection position within 0.2° after panning and tilting.

Power
The MVP sensor shall operate on 24 VAC, 50/60 Hz at a maximum of 20 watts. The camera and processor electronics shall consume a maximum of 10 watts and the remaining 15 watts shall support an enclosure heater.

Video Outputs
The MVP shall provide video output from the communications interface panel for real-time NTSC or PAL display on a monitor or PC over standard coax cable.

The software shall also display streaming video as part of the user software based on JPEG video compression or optimal hardware-based wavelet video compression. The streaming video shall be recordable as a data file on the PC for later playback and editing. Streaming video from multiple MVPs shall be simultaneously displayable as a group or video wall. Streaming video shall be possible at communication speeds from 9.6k Baud to 230k Baud.

Detection Types

The MVP shall be able to be programmed with a variety of detector types that perform specific functions. The general functions performed by the detectors shall:

1) Include presence/passage detection of moving and stopped vehicles.
2) Enable detection based on the direction of travel or based on when a moving vehicle stops.
3) Measuring vehicle speed and length and provide 5 classes of vehicles based on length.
4) Determine counts, either lane by lane or cumulative.
5) Speed alarm detectors:
    - Output alarm on each fast vehicle, ignoring vehicles of length of less than the user defines.
    - Output alarm based on the average number of vehicles the user enters and the upper and lower speed thresholds that the user defines.
    - Output alarm based on the average speed over a user defined time frame.
    - Output alarm based on a user defined percent increase or decrease over a speed limit.

Detection Zone Programming

Placement of detection zones shall be by means of a supervisor computer (PC) operating in the Windows 98, 2000 or Windows NT graphical environments, a keyboard and a mouse. The VGA monitor shall be able to show the detection zones superimposed on images of traffic scenes.

The detection zones shall be created by using a mouse to draw detection zones on the supervisor computer's VGA monitor. Using a mouse and the keyboard it shall be possible to place, size and orient detection zones to provide optimal road coverage for vehicle detection. It shall be possible to download detector configurations from the supervisor computer to the MVP, to retrieve the detector configuration that is currently running in the MVP and to back up detector configurations by saving them to the supervisor computer's removable or fixed disks.

The supervisor computer's mouse and keyboard shall be used to edit previously defined detector configurations to permit adjustment of the detection zone size and placement, to add detectors for additional traffic applications, or to reprogram the sensor for different traffic applications or changes in installation site geometry or traffic rerouting.

Optimal Detection

The video detection system shall optimally detect vehicle passage and presence when the MVP sensor is mounted 30 feet (10M) or higher above the roadway, when the image sensor is adjacent to the desired coverage area and when the distance to the farthest detection zone locations are not greater than ten (10) times the mounting height of the MVP. The recommended deployment geometry for optimal detector also requires that there be an unobstructed view of each traveled lane where detection is required. Although optimal detection may be obtained when the MVP is

mounted directly above the traveled lanes, the MVP shall not be required to be directly over the roadway. The MVP shall be able to view either approaching or receding traffic or both in the same field of view. The preferred image sensor orientation shall be to view approaching traffic since there are more high contrast features on vehicles as viewed from the front rather than the rear. The MVP sensor placed at a mounting height that minimizes vehicle image occlusion shall be able to monitor a maximum of 6 to 8 traffic lanes simultaneously.

Data Collection
The MVP sensor shall optionally store cumulative traffic statistics, internally in non-volatile memory, for later retrieval and analysis. The following data types are available to be stored in time increments from a cycle to one-hour increments:

1) Average Flow Rate
2) Total Volume Count
3) Arithmetic Mean Speed
4) Vehicle Class Count
5) Average Time Headway
6) Average Time Occupancy
7) Level of Service
8) Space Mean Speed
9) Space Density
10) Density

The above data types shall also be available to view viewed real-time.

Modular Cabinet Interface Unit (Mini Hub II)
The modular cabinet interface unit shall provide the hardware and software means for up to 8 MVP sensors to communicate real-time detector states and alarms to a local traffic signal controller. It shall comply with the electrical and protocol specifications of NEMA TS-1. The card shall have 1500 V RMS isolation rack logic ground and street wiring.

The modular cabinet interface unit shall be a simple interface card that plugs directly into an enclosure matching a NEMA type C or D detector rack. The modular cabinet interface unit with enclosure shall be a shelf-mounted unit. The modular cabinet interface unit shall provide 8 phase inputs and 16 detector outputs. In a TS-2 environment, the mini-hub shall connect to the traffic controller via a SDLC cable provided by the video detection manufacturer. The SDLC cable shall transmit all the inputs and outputs from the MVP.

Communications Interface Panel

The communications interface panel shall support one to 4 MVPs. The communications interface panel consists of a predefined wire termination block for MVP power, data and video connections, a power transformer for the MVP, electrical surge protectors to isolate the modular cabinet interface unit and MVP and an interface connector to cable directly to the modular cabinet interface unit.

The connection from the MVP(s) to the communications interface panel shall be via 5 ½ twisted pair with an overall shield and not coaxial cable. Manufacturer shall either supply their

recommended twisted pair cable for one continuous run from MVP to communications interface panel. Splicing of the cable will not be allowed.

The interface panel shall provide power for 4 MVPs through 4 step-down transformers, taking local line voltage and producing 28 VAC, 50/60 Hz, at about 30 watts. A ½ amp slow-blow fuse shall individually protect the step-down transformers.

System Installation and Training
The supplier of the video detection system shall supervise the installation and testing of the video detection system and computer equipment. A factory certified representative from the computer equipment. A factory certified representative from the supplier shall be on-site during installation. A 40-hour session of training shall be provided to personnel of the contracting agency in the operation, setup and maintenance of the video detection system. Instruction and materials shall be provided for a maximum of 10 persons and shall be conducted at a location selected by the contracting agency.

Warranty, Service and Support
Its supplier for a minimum of 2 years shall warrant the video detection system. Ongoing software support by the supplier shall include software updates of the MVP sensor, mini Hub II and supervisor computer applications. These updates shall be provided free of charge during the warranty period. The supplier shall maintain a program for technical support and software updates following expertise of the warranty period. This program shall be available to the contracting agency in the form of a separate agreement for continuing support.

The camera shall be ideal for freeway, intersection, bridge, tunnel, railroad, traffic monitoring and incident prevention applications, as well as link the traffic management center with each IP-addressable camera in the field. Also to be available with a Communications Server Software Developer's Kit (SDK), a programmer can easily create new client applications for display, incident alarms and traffic parameter databases.

Remote connections shall be able to utilize phone lines, leased CATV, or CDPD to bring compressed video and data back to the office.

Detection zones shall include count, presence and incident detection. Real-time polling or stored traffic data to include: volume, occupancy, speed, density, headway and 5 vehicle classifications either by phase or in time intervals from 1 second to 60 minutes. Extensive Boolean logic capabilities shall provide flexibility in detector layouts and helping validate an event or incident alarm.

To help troubleshoot the system, a status indicator shall appear in the video picture and an operations log provides a history of events.

METHOD OF PAYMENT

MEASUREMENT
Item S-008, Video Detection Camera Device and Connection, per each shall include all required materials, tools, equipment, labor, and incidentals required to install each video detection device

as described above (a color, 16x zoom lens, Machine Vision Processor (MVP) sensor), including the cable connection to the controller cabinet, per each as indicated on the plans.

Item S-009, Video Detection System per each intersection shall include all required materials, software, tools, equipment, labor and incidentals required to install the video detection equipment at each intersection for proper operation of the system. This item includes, but is not limited to, the communication interface panel and Modular Cabinet Interface Unit (Mini Hub II). The software, testing and training shall also be included in this pay item.

PAYMENT

Payment will be made under:

Item S-008, Video Detection Device and Connection, per each.
Item S-009, Video Detection System, per each.

ITEM S-010, FLASHING SIGNAL AHEAD SIGN: This item consists of furnishing and installing flashing signal ahead signs in accordance with the plans and the following requirements.

The CONTRACTOR shall submit the following to LADOTD Project Engineer for approval: the manufacturer's As Built parts list, wiring diagram(s), operating instructions and maintenance manuals in addition to the manufacturer's warranties.

Flat aluminum sign blanks shall consist of 5052-H38 aluminum alloy. Blanks shall be 0.100 inches thick, degreased, deburred, etched and alodine. Sizes and legends shall be provided by LADOTD unless shown in these Technical Specifications.

All sign faces shall consist of sheeting material and their legends applied to aluminum blanks specified herein using a heat vacuum method and/or by silk screening the legends only onto the backings and material. The sheeting shall be applied with legends to one side of each sign shown on the Plans.

The color of all faces shall consist of a reflectorized yellow, red, green or silver-white background with reflectorized black, red or white legend. The legend shall consist of letters and symbols conforming to the design of warning or regulatory signs as shown in the Manual on Uniform Traffic Control Device (MUTCD). All traffic signs shall be in accordance with the MUTCD.

Signal indications shown on the sign detail shall be 12 inch yellow signal indications and shall be flush with the sign face. The two yellow signal indications shall flash alternately. Flashing beacon sign shall be wired to signal controller (flasher assembly) as shown on the Plans.

Flashing Signal Ahead Sign conductor cable shall be 6 Conductor, polyethylene jacketed, stranded cable meeting the requirements of the IMSA 19-1, latest revision thereof. All conductors shall be No. 14 AWG (American Wire Gauge) unless otherwise specified.

Flashing Signal Head Sign work will be paid for at the contract unit price per each, complete and accepted, which price shall be full compensation for furnishing the aluminum blank sign, applied

reflective sheeting, mounting brackets and banding material and shall include all materials, equipment, tools, labor and incidentals necessary to complete the work.

SUBMITTALS

CONTRACTOR shall provide product submittal to PROJECT ENGINEER for approval prior to ordering equipment. CONTRACTOR shall also submit mounting methods to mast arms as required for the project to the PROJECT ENGINEER for approval.

METHOD OF PAYMENT

MEASUREMENT
Flashing Signal Ahead Sign shall be measured in units of each and will be paid for at the contract unit price per each. This price shall be measured as described in this technical specification and shall include the following components: signs, sign housing, lamps, internal wiring in the sign, 6 conductor cable in the mast arm and in the pole shaft, and electrical components and mounting assemblies. The mast arms or strain poles shall not be included in this pay item. The price shall be full compensation for furnishing, installing, mounting components, connection and testing all materials; for final cleanup; and for all labor, equipment, tools and incidentals necessary to complete the work.

PAYMENT
Payment will be made under:
Item S-010, Flashing Signal Ahead Sign, per each.

ITEM S-011, SIGNAL CONTROLLER (FLASHER ASSEMBLY): The flashing switch assembly specified herein shall be designated to operate on 110-130 volt, 60 cycle, alternating current, and shall be delivered completely wired and enclosed in a weatherproof cabinet. The flasher shall meet NEMA standards for a two-circuit flasher rated at 15 amps per circuit (Type 3).

These specifications define solid-state flashers that are used to periodically interrupt a source of alternating-current line power for the purpose of providing flashing traffic signals and flashing beacons. For the purpose of these specifications, the term "solid state" shall be defined as the main current to the signal load is not switched by electro-mechanically operated contacts.

The flasher shall be certified by an independent laboratory as conforming to NEMA TS-1, Section 8, and Section 2.2.3.2. This certificate shall be included with the drawing and literature for this equipment.

CABINET:

Unless otherwise specified, the CONTRACTOR shall furnish the controller completely housed in a weatherproof aluminum housing of clean-cut design and appearance. A hinged door shall be provided permitting complete access to the interior of the box. When closed, the door shall butt against a resilient neoprene sponge gasket to create a waterproof seal between the door and the housing. The door shall be provided with a standard lock with one key (sample key to be

furnished by the department) and shall have an outside designation "Traffic Control" or "Traffic Signals" cast or embossed into the metal with letters 3/4" high or larger. The cabinet interior shall have minimum dimensions measuring 9-3/4" wide, 12" long and 5-1/2" deep.

All cabinets, unless otherwise specified, shall be suitable for wood pole mounting. The manufacturer shall drill the cabinet for two (2) 2" wire entrance holes, one (1) in the top and one (1) in the bottom, as shown in Detail 1 'Cabinet Wire Entrance'. The wire entrance holes shall be located on the back edge of the cabinet and centered on the width of the cabinet. When the installer attaches the hubs to the cabinet, the hub shall align on the center of the entrance hole. The CONTRACTOR shall supply lock washers and hex nuts for the bolts to attach to the hub. The bolt pattern for the hub is 2-1/8" centered on a line perpendicular to the outside back of the cabinet and 3-3/4" parallel to the back of the cabinet. Mounting holes for the bolts shall be 3/8". The centers of the bolt pattern on the hub and the wire entrance hole shall coincide. The location of the hubs shall allow minimum clearance for box end wrenches to fit onto the nuts within the cabinet. The cabinet exterior shall be finished with two coats of high-grade green enamel (Outdoor Advertising Association of America No. 144). A color chip shall be available on request. Each coat shall be independently baked to resist peeling and chipping. The interior shall be furnished with gloss white enamel by the manufacturer.

HUB, CONDUIT:

Hubs for the cabinet shall be cast aluminum, ASTM B-108. The bolt pattern shall be as shown in Detail 1 'Cabinet Wire Entrance'. The blank hub shall be a flat plate, ¼" thick. All threaded hubs shall have a threaded collar a minimum of 2" from the base of the hub. The manufacturer shall center the threaded opening within the 3 ¾" dimension of the hub and the outside edge of the threaded collar in line with the back of the hub. The manufacturer shall make all hubs with stainless steel bolts casted into the hub. The manufacturer shall design the hub with the outside smooth to shed water. On hubs with a larger threaded collar, the design shall maintain the bolting pattern.

TYPE	OPENING (S) SIZE	OPENING DESCRIPTION
blank	- 0 -	no opening, flat plate, ¼" minimum thickness
single	¾"	one (1) opening, ¾" conduit thread
single	1"	one (1) opening, 1" conduit thread
single	1 ½"	one (1) opening, 1 ½" conduit thread
single	2"	one (1) opening, 2" conduit thread
single	2 ½"	one (1) opening, 2 ½" conduit thread
single	3"	one (1) opening, 3" conduit thread
Double	¾"	two (2) openings, each ¾" conduit thread
Double	1"	two (2) openings, each 1" conduit thread

CABINET HUB DESCRIPTION

Unless otherwise noted on the order, the CONTRACTOR shall provide two (2) hubs for each cabinet. One (1) hub shall be a double ¾" and the other shall be blank.

MOUNTING ADAPTER:

The CONTRACTOR shall provide two (2) pole adapters as shown in Detail 2 'Pole Mounting Adapter'. The adapter shall be conformable for mounting to round poles with diameters of 4 ½" or larger. Material for the adapter shall be aluminum alloy 6061 or 5052-H32. The minimum thickness shall be 1/8". The material shall have the mechanical strength to hold, in addition to the cabinet, the added weight and load of items such as conduit, cables, service equipment, etc. The mounting holes in the adapter shall be 5/8" and slots for steel banding shall be 1-1/8" by ¼". The adapter shall be installed with the hubs and use the same mounting bolts of the hub. The CONTRACTOR shall supply gaskets for installation between the cabinet, hub, and adapter.

GASKET:

The manufacturer shall cut the gasket to fit the bolt pattern specified for the hub and wire-way opening. The material for the gasket shall be 50% cork/50% neoprene material. The CONTRACTOR shall send four (4) gaskets with each cabinet.

FLASHER CHARACTERISTICS:

Flashers shall have the following Physical Characteristics:

A. The overall dimensions of the flasher shall not exceed 8.25 inches from the mating connector, including any handle or gripping device. The flasher shall be no more than 4.2 inches high.

B. Intermate with a Cinch-Jones socket type S-406-SB or equivalent.

C. Be so constructed that its lower surface will be no more than 2.1 inches below the centerline of connector configuration.

D. Be so constructed that no part of it will extend more than 0.9 inches to the left and 1.1 inches to the right of the centerline of connector pin configuration as viewed from the front.

E. Be so constructed that personnel inserting or removing the module will not be exposed to live parts nor be required to insert either their hands or fingers into a load rack.

F. All printed circuit boards shall be made from NEMA (FR-4) glass-epoxy, or equivalent (See NEMA Standards Publication No. LI 1-1971). Circuit boards exceeding 2 inches in any dimension shall have a nominal thickness of at least 1/32 inches.

Note: All PC boards shall be coated with an epoxy or approved equal type material to prevent erratic performance due to high humidity, condensation, and growth of fungus and mildew. This coating will not cover the components on the board, but once the components are in place, the soldered joints shall be covered with moisture and fungus proof, clear type of acrylic lacquer. This coating shall not be injurious to the board or components and shall not interfere with the repair of the circuitry or replacement of components. The walls of all plated through holes shall have a minimum copper plating thickness of 0.001 inches. All circuit tracks shall have conductivity equivalent to at least 2 ounces per square foot of copper (2 oz/ft^2 Cu).

All electrical mating surfaces shall be made of non-corrosive material. The unit shall be designed so that each component is identified by a circuit reference symbol. This identification may be affixed to the printed circuit boards, the cover of the unit or in an assembly drawing provided with the unit.

BACK PANEL CHARACTERISTICS:

The manufacturer shall mount a back panel in the cabinet and shall have mounted on it cartridge type fuse, connector for NEMA Type 3 flasher, flasher support bracket, and permanently identified field terminals. The back panel size shall be 9" wide and 12" high. The manufacturer shall have the back panel constructed of ¼" electrical grade *masonite*. The panel shall have four (4) mounting holes approximately 11/32" in diameter. The holes shall be centered on an 8" x 9" bolt pattern. The bolt pattern shall be centered on the back panel. The back panel shall support the NEMA flasher from the panel along its longest dimension. The support shall not restrict removal or installation of the flasher unit on the back panel while the panel is in the cabinet. All wiring shall be on the front of the panel. The field terminals shall have wired to it only the circuits from the field.

ELECTRICAL CHARACTERISTICS:

Flashers shall have the following electrical characteristics:

A. The rating of the output circuit shall be the minimum rating for a tungsten lamp or gas-tuning-transformer load over a voltage range of 60 to 135 volts at 60 hertz. The output circuit shall not be de-rated for the operation over the ambient range of -30 degrees to +165 degrees F and the humidity range as both detailed in TS 1-2.1.05.

B. Input to the solid-state flashers shall consist solely of the 60-hertz alternating-current power source. This input shall supply the power for the output circuit and also provide power to the flasher logic. The flasher shall turn on within 5 degrees of the zero voltage point of the alternating current line sinusoid and shall turn off within 5 degrees of the zero current point of the alternating-current line sinusoid. The flasher need not turn on within 5 degrees of the zero point of the alternating-current sinusoid for the first flash cycle (on-off cycle) after the initial application of alternating-current power to the flasher.

C. The "flashing" voltage output shall provide not less than 50, nor more than 60, flashes per minute with an on period of 50 $\pm$ 5%.

D. The flasher output shall have a dv/dt rating of 100 volts per microsecond at 70 degrees F.

E. The flasher output shall have a peak standoff voltage of 480 volts or greater at 70 degrees F.

F. The output current from the flasher through the load, when the flasher is in the off state, shall not exceed a maximum of 15 milliamperes rms.

G. The flashing output shall consist of two (2) outputs each rated at 15 amperes.

H. Flashers shall be so designed that circuit #1 will be essentially ON when circuit #2 is OFF, and vice-versa. The principal purpose served by this arrangement is to smooth out the loading on the power source. The maximum OFF period when both circuit #1 and circuit #2 are OFF, or the maximum ON period when both circuit #1 and circuit #2 are ON, shall not exceed 17 milliseconds during the transition from OFF to ON to OFF.

I. The line power shall be fused with NON 0-30 amp fuse. This fuse shall be sized properly for the load limit of the flasher. The wiring shall be properly sized for the design current of each circuit. Separate terminals for the line and field neutral shall be provided.

J. Lightning protection shall be provided for line input and each signal circuit. A gas filled fuse shall be across the line input on the load side of the fuse. It shall be capable of clamping input voltage at 350 volts. A MOV shall be on each signal circuit and provide a minimum clamping voltage of 395 volts and dissipate 30 joules of energy (GE - V150LA10A or approved equal).

K. All electrical connectors shall be insulated from the back panel at a 600 VAC rating.

LITERATURE:

One set of complete literature shall be furnished with the unit. The literature must include, *at least,* the following information: Parts List, Operating Instructions, Wiring Diagrams complete with (when appropriate) waveform data, peak voltage data, and Schematic Diagrams.

SUBMITTAL

CONTRACTOR shall provide product submittal to PROJECT ENGINEER for approval prior to ordering equipment. CONTRACTOR shall also submit mounting methods to mast arms as required for the project to the PROJECT ENGINEER for approval.

METHOD OF PAYMENT

MEASUREMENT
The flashing switch, including cabinet, shall be measured per each for payment by the actual number of units installed, tested and accepted.

PAYMENT

Payment will be made under:
Item S-011, Signal Controller (Flasher Assembly), per each.

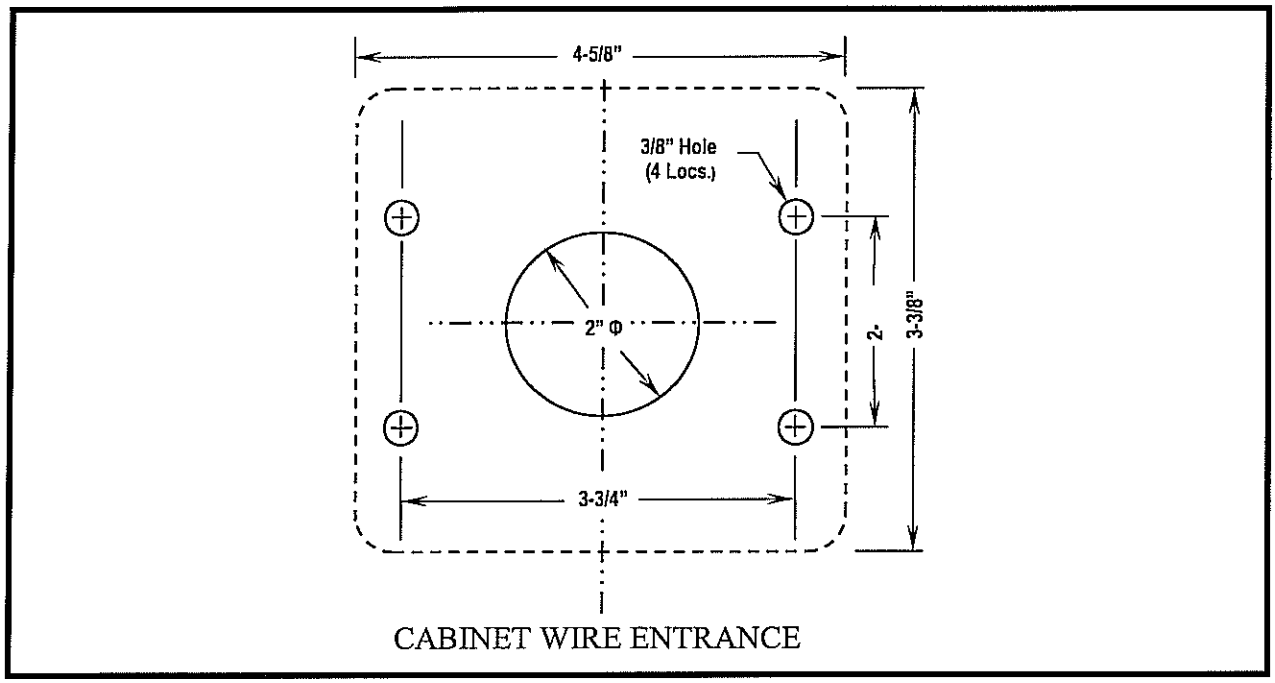

Detail 1
Cabinet Wire Entrance

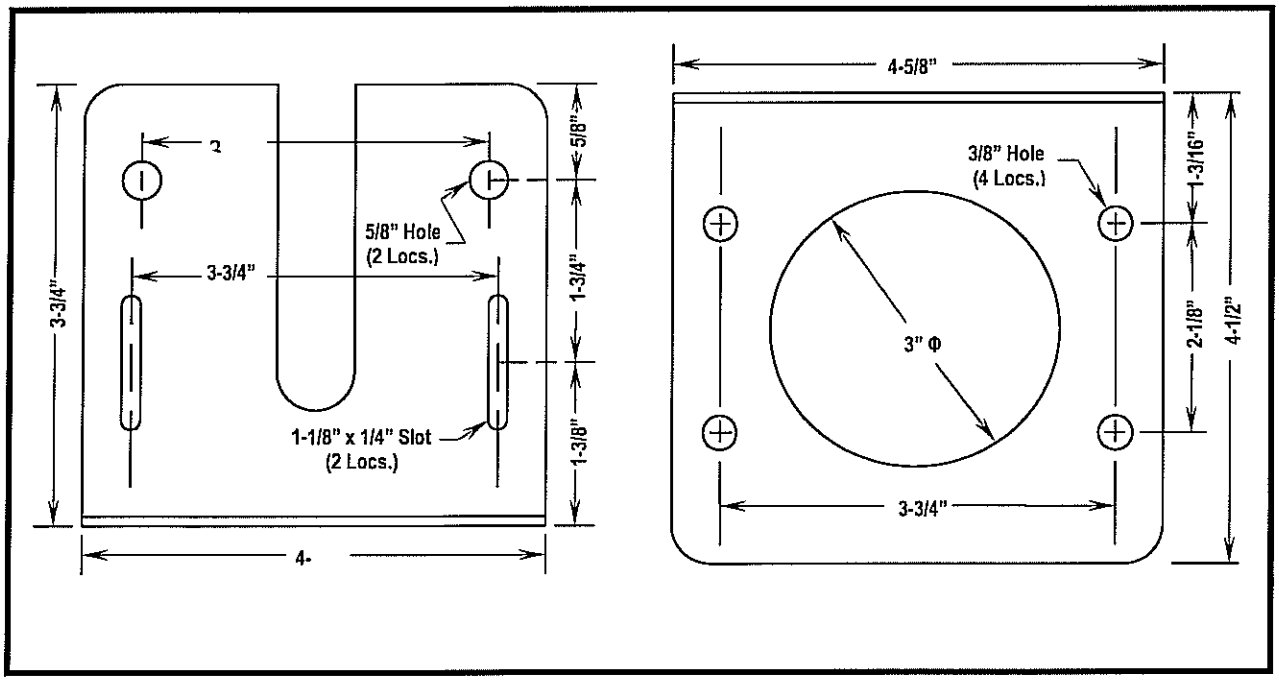

Detail 2
Pole Mounting Adapter

ITEM, S-012, T1 TELEPHONE SERVICE AND RELATED ITEMS: The CONTRACTOR is responsible for making arrangements with the telephone company to provide direct connect telephone facilities at the intersection of US 61 and US 51 for communications to the Traffic Engineering office located at LADOTD District 62. The CONTRACTOR shall be responsible for providing all required telephone equipment (CSU/DSU device), hardware plus all labor and materials necessary for a complete and accepted installation. The CONTRACTOR shall be responsible for following any and all telephone company installation requirements.

The CONTRACTOR shall furnish any necessary shop drawings of the telephone service to the PROJECT ENGINEER for approval.

If necessary, the CONTRACTOR shall install an aerial telephone wire drop, telephone termination cabinet, telephone wire in the three fourths inch (3/4") galvanized rigid steel conduit with weather head, and telephone wire termination as part of the telephone service. The CONTRACTOR shall be responsible for contacting and coordinating with the telephone company for telephone cable installation, required equipment and termination. Any and all costs charged by the telephone company for the above work shall be absorbed by the CONTRACTOR.

The CONTRACTOR is responsible for all power and telephone costs after reconnection of service until a conditional or final acceptance letter is issued by LADOTD. The power and telephone service costs shall be absorbed by the CONTRACTOR.

The telephone cable shall be standard T1 line, two (2) pair type direct connect telephone service (compatible with telephone company requirements) and capable of supporting a minimum of 56K baud frame relay data transmission. The CONTRACTOR shall obtain in writing from the telephone company the projected calculated transmission speed.

METHOD OF PAYMENT

MEASUREMENT

Modification of Existing Traffic Signal Control Software

This item will be measured per lump sum and will include providing all labor, required telephone equipment (CSU/DSU), materials, and incidentals required for the furnishing and installation of Telephone Service (T1) and Related Items as detailed in the plans and as described in the specifications. Included in this item is the establishment of a complete and operational system as described herewith for full operation and control of Telephone Service (T1) and Related Items in place and ready for use. The telephone cable is not included in this pay item but shall be paid for at the contract unit price per linear foot of conductor cable installed, complete and accepted under Pay Item 736-12-J, Conductor (4C, Telephone).

PAYMENT

Payment will be made at the Contract unit price under:

Item S-012, T1 Telephone Service and Related Items, per lump sum.

ITEM S-013, MODIFICATIONS TO EXISTING TRAFFIC SIGNAL CONTROL SOFTWARE: The Modification of Existing Traffic Signal Control Software are the modifications of the existing office software at LADOTD District 02 and 62 Traffic Engineering offices necessary to communicate with the traffic signal controllers in this project to upload and download controller settings and monitor system-wide status. The Modification of Existing Traffic Signal Control Software shall comply with the software contained in the specifications entitled "TRAFFIC SIGNAL CONTROL SYSTEMS, TRAFFIC CONTROL STANDARD NUMBER 18A", and requirements contained herein.

Features

The basic features of the Modification of Existing Traffic Signal Control Software are:

- The Traffic Signal Control Software shall be a comprehensive, integrated, and open set of modular software components capable of controlling a single intersection up to 9999 intersections.
- The software shall support TCP/IP devices on Windows 98, NT and XP or latest operation systems.
- The software shall be capable of running by dial-up and direct connections and local area networks. The software shall be capable of utilizing a combination of telephone, spread-spectrum, dedicated fiber, and cable TV communications devices.
- The software shall include a NTCIP traffic signal controller and center-to-center control requirements.
- The software shall include Automatic web page generation and shall be Internet compatible.
- Build in software components shall be integrated with traffic signal control, conflict monitor control, detection control, lamp monitor, and reversible lane control.
- The software shall automatically generate web pages and traffic condition data. Data shall be in ASCII, HTML and GIF formats with system security ensuring that only specific data is accessible.
- Alarm Paging
- System-wide status reporting
- Detector graphs, output files and arrival distributions
- The software shall be capable of field uploads and downloads between Palm Top devices and traffic signal controllers.

Training

The Traffic Signal Control Software shall provide a minimum of 80 hours of classroom training on the provided software at the District Traffic Engineers office where the project is located. An additional 80 hours of training on operator support of the software shall be provided at DOTD Traffic Operations Section. All training shall be offered within 12 months of issuance of the project notice to proceed and prior to Final Acceptance.

Support

Software licenses shall include software support, upgrades and patches for a minimum of 10 years. The software support to the District shall be channeled through LADOTD's Traffic Services Section resulting in a single direct contact between LADOTD and the software supplier.

System Software Performance/Integration Test

This test shall involve all of the aspects of the applications software as described in this pay item in addition to the Software Documentation and the System User's Manuals. The main purposes of this test are to ensure:

1- The software for all signal controllers specified in the Specifications are met.
2- The signal controller data bases are developed and implemented in the District 02 and 62 Traffic Engineering offices controller software.
3- The communication (uploading/downloading of controller data) is operating between the field devices (traffic controllers) and the LADOTD District 02 (via existing wireless radio) and District 62 (via new T1 telephone line) computers at the respective Traffic Engineering offices.
4- The controllers in each intersection will be successfully integrated with the LAN microcomputer system located at the LADOTD District 02 and 62 Traffic Engineering offices.

This test shall be performed on the microcomputers and software. The CONTRACTOR shall submit to the PROJECT ENGINEER a written description of the test configuration at least thirty (30) days prior to start of test.

If deviations and/or omissions from the Software Test Specifications are found during the test, the CONTRACTOR shall be required to make all necessary corrections to the subsystem software within forty-eight (48) hours.

As part of this test, documentation shall be submitted explaining the procedures to be utilized by the CONTRACTOR for the integration. The PROJECT ENGINEER will supervise the integration of each subsystem.

The CONTRACTOR shall be responsible for the integration of each intersection. The CONTRACTOR shall also be responsible for determining the reason why a intersection did not respond to a command from the central microcomputer. It shall be the responsibility of the CONTRACTOR to correct any data base, hardware, or software malfunctions that caused an integration failure during the System Software Performance/Integration Test.

The CONTRACTOR shall make the necessary corrections to the system software. When the corrections have been completed, the CONTRACTOR shall notify the PROJECT ENGINEER in writing of requests for a retest along with a written summary of the corrections performed and if applicable, revised computer/hardware documentation, Software Documentation, and System User's Manuals. The retest shall begin not earlier than two (2) weeks following the termination of the first test unless approved by the PROJECT ENGINEER and the CONTRACTOR.

Any subsequent retest may begin no sooner than ten (10) days following the completion of the previous test period. The PROJECT ENGINEER shall be allowed a maximum of fifteen (15) days for each subsequent retest period.

System Operations Test

All Component Tests (controllers, fiber optics, ethernet switches, etc.) and System Software Performance/Integration Tests for all intersections and integration at the District 02 and 62 Traffic Engineering offices shall be performed and must be accepted by the PROJECT ENGINEER prior to starting the System Operations Test described herein.

The System Operations Test shall consist of two (2) sequential periods: Integration Period and Burn-In Period. If the requirements during each of the two (2) periods have been met, the System Operations Test shall be completed. The requirements for each of the two (2) periods are described below. The Integration Period and Burn-In Period shall be performed during the project completion time for this project.

The PROJECT ENGINEER reserves the right to halt this System Operations Test at any time, if in his sole judgment, errors or inconsistencies in the performance of any part of the system would lead to improper, inefficient, or unsafe operation of the traffic signals.

The CONTRACTOR shall be responsible for documenting all modifications made to correct operations that are not in conformance with the Plans and these Technical Specifications. This includes updating corresponding documentation within two (2) weeks of the modification.

Integration Period

The Integration Period shall NOT commence until all intersections have been conditionally accepted and integration at the District 02 and 62 Traffic Engineering offices have been completed, passed and have been approved and accepted by the PROJECT ENGINEER.

The Integration Period shall start no later than fifteen (15) calendar days following a written notice by the CONTRACTOR to the PROJECT ENGINEER requesting to start this project phase.

The Integration Period shall last thirty (30) consecutive days without failure of the signal system, communications between devices and District offices, fiber interconnect, fiber tie ins to devices and the integration at the District 02 and 62 Traffic Engineering offices.

The Burn-In Period cannot begin until the Integration Period for thirty (30) consecutive days has been approved.

The CONTRACTOR shall submit a schedule of the Integration Period to the PROJECT ENGINEER upon the request to initiate this project phase.

The CONTRACTOR shall be responsible for the integration of all intersections. The CONTRACTOR shall also be responsible for determining the reason why an intersection did not respond to a command from the central microcomputer. It shall be the responsibility of the CONTRACTOR to correct any data base, hardware, or software malfunctions that caused an integration failure during the Integration Period.

The Integration Period described herewith must be approved by the PROJECT ENGINEER prior to starting the Burn-In Period.

Burn-In Period

The Burn-In Period shall not commence until all controllers and integration at the District 02 and 62 Traffic Engineering offices have all passed the Integration Period described herewith and has been approved and accepted by the PROJECT ENGINEER.

A Burn-In Period will be required for the Computerized Traffic Signal Systems. The Burn-In Period shall commence upon completion of the Integration Period and a minimum of seven (7) days after all Controllers are under system control, and the PROJECT ENGINEER has received in writing a request from the CONTRACTOR to commence the Burn-In Period. System software/hardware documentation and the System User's Manuals shall be up to date prior to the Burn-In Period or any testing period.

The Burn-In Period shall last thirty (30) consecutive days without failure of the signal system, communications, fiber interconnect, fiber tie ins and the integration at the District 02 and 62 Traffic Engineering offices. The Burn-In Period must be approved by the PROJECT ENGINEER prior to Final Acceptance.

Final Acceptance

Upon satisfactory completion of the Integration Period described in Pay Item "S-013 Modification of Existing Traffic Signal Control Software" and Burn-In Period, the project will be inspected for Final Acceptance in accordance with these Technical Specifications and the latest LADOTD Standard Specifications and Supplements. The Final Acceptance shall be performed during the completion time for this project.

METHOD OF PAYMENT

MEASUREMENT

This item will be measured per lump sum and will include providing all labor, equipment, materials, and incidentals required for the furnishing and installation of Modification of Existing Traffic Signal Control Software as detailed in the plans and as described in the specifications. Included in this item is the establishment of a complete and operational system as described herewith for full operation and control of Traffic Signal Control Software complete in place and ready for use.

PAYMENT

Payment will be made at the Contract unit price under:

Item S-013, Modifications to Existing Traffic Signal Control Software, per lump sum.

CONTRACT TIME (03/05): The entire contract shall be completed in all details and ready for final acceptance in accordance with Subsection 105.17(b) within **ninety (90)** working days.

Prior to assessment of contract time, the contractor will be allowed 90 calendar days from the date stipulated in the Notice to Proceed to commence with portions of the contract work including but not limited to assembly periods, preparatory work for materials fabrications such as test piles, or other activities which hinder progress in the beginning stages of construction. Prior to issuance of the Notice to Proceed, the Department will consider extending the assembly period upon written request from the contractor justifying the need for additional time.

The contractor shall be responsible for maintenance of traffic from the beginning of the assembly period. During the assembly period, the contractor will be allowed to do patching and other maintenance work necessary to maintain the roadway with no time charges when approved by the engineer.

If the contractor begins regular construction operations prior to expiration of the assembly period, the assessment of contract time will commence at the time construction operations are begun.

LOUISIANA
DEPARTMENT OF TRANSPORTATION AND DEVELOPMENT
SUPPLEMENTAL SPECIFICATIONS

STANDARD PROVISIONS
GENERAL LIABILITY POLICIES

GENERAL INSTRUCTIONS

1. STANDARD LANGUAGE: This form is expressed in standard language which may not be amended and no part of which may be omitted except (a) as indicated by these instructions, or (b) as indicated in reference notes shown below referring to specific portions of the form, or (c) by an endorsement which states an amendment or exclusion of some provision of the form in accordance with the provisions of a manual rule, the form of which endorsement has been approved, if required, by the supervising authority of the State in which the policy is issued.

2. OPTIONAL SEQUENCE AND ARRANGEMENT: The several parts of the form, viz. "Insuring Agreements," "Exclusions," "Conditions" and "Declarations" may appear in the policy in such sequence as the company may elect and the sequence and arrangement of the several provisions of those parts are also optional with the company.

3. DESCRIPTIVE HEADINGS--IDENTIFYING OR INDEXING DESIGNATIONS: The descriptive headings of the parts of the form (as quoted above) and of the major insuring agreements ("Bodily Injury Liability," "Property Damage Liability," etc.) are standard expressions which may not be amended or omitted, but all other identifying or indexing designations (such as "Coverage A," "Defense, Settlement, Supplementary Payments," "Cancellation," etc.), including literal or numerical designations or paragraphs or phrases, may be amended or omitted at the company's option. When such identifying or indexing designations, used for the purpose of reference in the text of the form or any endorsement form applicable thereto, are amended or omitted, descriptive designations shall be substituted.

4. ADDITIONAL COVERAGES OR COMPANIES, EXPLANATORY OR CONNECTIVE LANGUAGE: When policies are issued to provide insurance in this form together with insurance covering other risks, the addition of necessary explanatory or connective language which does not amend the expression of this form is permissible and the introductory language of the "Insuring Agreements" which provides for the issuance of a policy by 2 companies may be used and, if necessary, paraphrased to permit such policies to be issued by more than 2 companies.

5. DECLARATIONS--INCLUDING OTHER RISKS: A common set of declarations may be used in those cases where policies in this form are issued with policies covering other risks.

6. INSTALLMENT PREMIUM PAYMENT: Policies written to provide for payment of premium in installments may provide for lapse or suspension of the policy upon default of payment when due.

7. ADDITION OF COVERAGE BY ENDORSEMENT: When insuring agreements and other provisions relating to any particular class of insurance are added to this policy by endorsement, such additional insurance must be expressed in approved standard language relating to the particular class and must be subject to all standard provisions applicable to that class by the expressions of the endorsement or of the policy or of both taken together.

8. DEFINITION OF "STANDARD" AND "APPROVED": "Standard language" or "approved standard language" when used in these instructions means the form and endorsements either prescribed or approved by the insurance supervising authority of the State in which policy forms and endorsements are approved or prescribed. In those States where supervising authorities do not have the authority to approve or prescribe policies, forms and endorsements, the terms mean the forms and endorsements adopted by the companies for use in such States.

9. PREMIUM STATEMENT: The statement with respect to payment of premium may be amended by an endorsement to make necessary provision with respect to payment of premium, payment of additional premium and return of premium and dividends under the policy.

10. SPECIAL CONDITIONS FOR MUTUALS, RECIPROCALS, AND PARTICIPATING STOCK COMPANIES: When the policy is issued by a mutual company, a reciprocal association or a participating stock company having special provisions applicable to its membership or policyholders, such provisions, when approved by the supervising authority of the State in which the policy is issued if such approval is required, may be inserted in the policy.

BLANK INDEMNITY COMPANY
BLANK INSURANCE COMPANY

[1]

Railroad Protective Liability Policy No. (State or Federal Highway Projects)

[1]Matter in box may be included, omitted or amended at the option of the company.

DECLARATIONS

Item 1. Named Insured _____

Address_____
(Street No. Town or City Parish or County State)

Item 2. Policy Period: From_____to_____
12:01 A.M. Central Standard (or Daylight) Time at the designated job site as stated herein.

Item 3. The insurance afforded is only with respect to such of the following coverages as are indicated [in Item 6] by specific premium charge or charges. The limit of the company's liability against such coverages shall be as stated herein, subject to all the terms of this policy having reference thereto. (A statement may be added that a definite notation may be made in the premium column to show that a particular coverage is not afforded.)

Coverages		Limits of Liability
Blank Indemnity Company	A-Bodily Injury Liability	$ each person $ each occurrence
Blank Insurance Company	B-Property Damage Liability C-Physical Damage to Property	$ each occurrence $ aggregate

Item 4. Name and Address of Contractor _____
_____

Item 5. Name and Address of Governmental Authority for whom the work by the Contractor is being performed _____

_____

Item 6. Designation of Job Site & Description of Work

Premium Bases	Rates Coverage A Coverages B & C	Advance Premiums Coverage A Coverages B & C
Contract Cost Rental Cost	Per $100 of Cost Per $100 of Rental Cost	

If Policy Period more than 1 year:

Premium is payable: On effective date of Policy $ 1st Anniversary

$ 2nd Anniversary

Date and Place of Issue _____

{Countersigned { _____ 20 __, at _____}
By _____

A. Renewal of policy number.
B. The name insured is a corporation.
C. Endorsement serial numbers.
D. Rating plan or premium discount.

(For policy issued by one company)

(Name and Location of Indemnity Company)

A (type of company) insurance company, herein called the company

agrees with the insured, named in the declarations made a part hereof, in consideration of the payment of the premium and in reliance upon the statements in the declarations made by the name insured and subject to all of the terms of this policy:

(For policy issued by two companies)

(Name and Location of Indemnity Company)
and
(Name and Location of Insurance Company)

Each a (type of company) insurance company, herein called the company,

severally agree with the insured named in the declarations made a part hereof, in consideration of the payment of the premium and in reliance upon the statements in the declarations made by the named insured and subject to all of the terms of this policy, provided the Blank Indemnity

Company shall be made the insurer with respect to coverage _____
and no other and the Blank Insurance Company shall be the insurer with respect to coverage_____and no other.

INSURING AGREEMENTS

I. COVERAGE A - BODILY INJURY LIABILITY: To pay on behalf of the insured all sums which the insured shall become legally obligated to pay as damages because of bodily injury, sickness, or disease, including death at any time resulting therefrom, hereinafter called "bodily injury," either (l) sustained by any person arising out of acts or omissions at the designated job site which are related to or are in connection with the work described in Item 6 of the Declarations, or (2) sustained at the designated job site by the contractor or any employee of the contractor, or by any employee of the governmental authority specified in Item 5 of the declarations, or by any designated employee of the insured, whether or not arising out of such acts omissions.

COVERAGE B - PROPERTY DAMAGE LIABILITY: To pay on behalf of the insured all sums which the insured shall become legally obligated to pay as damages because of physical injury to or destruction of property, including loss of use of any property due to such injury or destruction, hereinafter called "property damage" arising out of acts or omissions at the designated job site which are related to or are in connection with the work described in Item 6 of the declarations.

COVERAGE C - PHYSICAL DAMAGE TO PROPERTY: To pay for direct and accidental loss of or damage to rolling stock and their contents, mechanical construction equipment, or motive power equipment, hereinafter called loss, arising out of acts or omissions at the designated job site which are related to or are in connection with the work described in Item 6 of the declarations; provided such property is owned by the named insured or is leased or entrusted to the named insured under a lease or trust agreement.

II. DEFINITIONS

(a) Insured - The unqualified word "insured" includes the name insured and also includes any executive officer, director or stockholder thereof while acting within the scope of his duties as such.

(b) Contractor - The word "contractor" means the contractor designated in Item 4 of the declarations and includes all subcontractors of said contractor but shall not include the name insured.

(c) Designated employee of the insured - The words "designated employee of the insured" mean:

(1) Any supervisory employee of the insured at the job site.

(2) Any employee of the insured while operating, attached to or engaged on work trains or other railroad equipment at the job site which are assigned exclusively to the contractor, or

(3) Any employee of the insured not within (1) or (2) who is specifically loaned or assigned to the work of the contractor for prevention of accidents or protection of property, the cost of whose services is borne specifically by the contractor or by governmental authority.

(d) Contract - The word "contract" means any contract or agreement to carry a person or property for a consideration or any lease, trust or interchange contract or agreement respecting motive power, rolling stock or mechanical construction equipment.

III. DEFENSE, SETTLEMENT, SUPPLEMENTARY PAYMENTS: With respect to such insurance as is afforded by this policy under coverages A and B, the company shall:

(a) Defend any suit against the insured alleging such bodily injury or property damage and seeking damages which are payable under the terms of this policy, even if any of the allegations of the suit are groundless, false or fraudulent, but the company may make such investigation and settlement of any claim or suit as it deems expedient;

(b) Pay, in addition to the applicable limits of liability:

(1) All expenses incurred by the company, all costs taxed against the insured in any such suit and all interest on the entire amount of any judgment therein which accrues after entry of the judgment and before the company has paid or tendered or deposited in court that part of the judgment which does not exceed the limit of the company's liability thereon;

(2) Premiums on appeal bonds required in any such suit, premiums on bonds to release attachments for an amount not in excess of the applicable limit of liability of this policy, but without obligation to apply for or furnish any such bonds;

(3) Expenses incurred by the insured for such immediate medical and surgical relief to others as shall be imperative at the time of the occurrence;

(4) All reasonable expenses other than loss of earnings, incurred by the insured at the company's request.

IV. POLICY PERIOD, TERRITORY: This policy applies only to occurrences and losses during the policy period and within the United States of America, its territories, or possessions, or Canada.

EXCLUSIONS

This policy does not apply:

(a) to liability assumed by the insured under any contract or agreement except a contract as defined herein;

(b) to bodily injury or property damage caused intentionally by or at the direction of the insured;

(c) to bodily injury, property damage or loss which occurs after notification to the named insured of the acceptance of the work by the governmental authority, other than bodily injury, property damage or loss resulting from the existence or removal of tools, uninstalled equipment and abandoned or unused materials;

(d) under Coverages A (l), B and C, to bodily injury, property damage or loss, the sole proximate cause of which is an act or omission of any insured other than acts or omissions of any designated employee of any insured;

(e) under Coverage A, to any obligation for which the insured or any carrier as his insurer may be held liable under any workmen's compensation, unemployment compensation or disability benefits law, or under any similar law; provided that the Federal Employers' Liability Act, U. S. Code (1946) Title 45, Sections 51-60, as amended, shall for the purposes of this insurance be deemed not to be any similar law;

(f) under Coverage B, to injury to or destruction of property (i) owned by the named insured or (ii) leased or entrusted to the named insured under a lease or trust agreement.

(g) 1. Under any Liability Coverage, to injury, sickness, disease, death or destruction.

(a) with respect to which an insured under the policy is also an insured under a nuclear energy liability policy issued by Nuclear Energy Liability Insurance Association, Mutual Atomic Energy Liability Underwriters or Nuclear Insurance Association of Canada, or would be an insured under any such policy but for its termination upon exhaustion of its limit of liability; or

(b) resulting from the hazardous properties of nuclear material and with respect to which (l) any person or organization is required to maintain financial protection pursuant to the Atomic Energy Act of 1954, or any law amendatory thereof or (2) the

insured is, or had this policy not been issued would be, entitled to indemnity from the United States of America, or any agency thereof, under any agreement entered into by the United States of America, or any agency thereof, with any person or organization.

2. Under any Medical Payments Coverage, or under any Supplementary-Payments provision relating to immediate medical or surgical relief, to expenses incurred with respect to bodily injury, sickness, disease or death resulting from the hazardous properties of nuclear material and arising out of the operation of a nuclear facility by any person or organization.

3. Under any Liability Coverage, to injury, sickness, disease, death or destruction resulting from the hazardous properties of nuclear material, if

(a) The nuclear material (l) is at any nuclear facility owned by, or operated by or on behalf of, an insured or (2) has been discharged or dispersed therefrom;

(b) The nuclear material is contained in spent fuel or waste at any time possessed, handled, used, processed, stored, transported or disposed of by or on behalf of an insured; or

(c) The injury, sickness, disease, death or destruction arises out of the furnishing by an insured of services, materials, parts of equipment in connection with the planning, construction, maintenance, operation or use of any nuclear facility, but if such facility is located within the United States of America, its territories or possessions or Canada, this exclusion (c) applies only to injury to or destruction of property at such nuclear facility.

4. As used in this exclusion:

"hazardous properties" include radioactive, toxic or explosive properties;

"nuclear material" means source material, special nuclear material or byproduct material;

"source material," "special nuclear material," and "byproduct material" have the meanings given them in the Atomic Energy Act of 1954 or in any law amendatory thereof;

"spent fuel" means any fuel element or fuel component, solid or liquid, which has been used or exposed to radiation in a nuclear reactor;

"waste" means any waste material (1) containing byproduct material and (2) resulting from the operation by any person or organization of any nuclear facility included within the definition of nuclear facility under paragraph (a) or (b) below;

"nuclear facility" means

(a) any nuclear reactor,

(b) any equipment or device designed or used for (1) separating the isotopes of uranium or plutonium, (2) processing or utilizing spent fuel, or (3) handling, processing or packaging waste,

(c) any equipment or device used for the processing, fabricating or alloying of special nuclear material if at any time the total amount of such material in the custody of the insured at the premises where such equipment or device is located consists of or contains more than 25 grams of plutonium or uranium 233 or any combination thereof, or more than 250 grams of uranium 235,

(d) any structure, basin, excavation, premises or place prepared or used for the storage or disposal of waste,

and includes the site on which any of the foregoing is located, all operations conducted on such site and all premises used for such operations;

"nuclear reactor" means any apparatus designed or used to sustain nuclear fission in a self-supporting chain reaction or to contain a critical mass of fissionable material;

with respect to injury to or destruction of property, the word "injury" or "destruction" includes all forms of radioactive contamination of property.

(h) Under Coverage C, to loss due to nuclear reaction, nuclear radiation or radioactive contamination, or to any act or condition incident to any of the foregoing.

CONDITIONS

[The conditions, except conditions 3, 4, 5, 6, 7, 8, 9, 10, 11 and 12 apply to all coverages. Conditions 3, 4, 5, 6, 7, 8, 9, 10, 11 and 12 apply only to the coverage noted thereunder.]

1. Premium: The premium bases and rates for the hazards described in the declarations are stated therein. Premium bases and rates for hazards not so described are those applicable in accordance with the manuals in use by the company.

The term "contract cost" means the total cost of all work described in Item 6 of the declarations.

The term "rental cost" means the total cost to the contractor for rental of work trains or other railroad equipment, including the renumeration of all employees of the insured while operating, attached to or engaged thereon.

The advance premium stated in the declarations is an estimated premium only. Upon termination of this policy the earned premium shall be computed in accordance with the company's rules, rates, rating plans, premiums and minimum premiums applicable to this insurance. If the earned premium thus computed exceeds the estimated advance premium paid, the company shall look to the contractor specified in the declarations for any such excess; if less, the company shall return to the said contractor the unearned portion paid.

In no event shall payment of premium be an obligation of the named insured.

2. Inspection: The named insured shall make available to the company records of information relating to the subject matter of this insurance.

The company shall be permitted to inspect all operations in connection with the work described in Item 6 of the declarations.

3. Limits of Liability - Coverage A: The limit of bodily injury liability stated in the declarations as applicable to "each person" is the limit of the company's liability for all damages, including damages for care and loss of services, arising out of bodily injury sustained by 1 person as the result of any 1 occurrence; the limit of such liability stated in the declarations as applicable to "each occurrence" is, subject to the above provision respecting each person, the total limit of the company's liability for all such damage arising out of bodily injury sustained by 2 or more persons as the result of any 1 occurrence..

4. Limits of Liability - Coverages B and C: The limit of liability under coverages B and C stated in the declarations as applicable to "each occurrence" is the total limit of the company's liability for all damages and all loss under coverages B and C combined arising out of physical injury to, destruction or loss of all property of one or more persons or organizations, including the loss of use of any property due to such injury or destruction under coverage B, as the result of any 1 occurrence.

Subject to the above provisions respecting "each occurrence," the limit of liability under coverages B and C stated in the declaration as "aggregate" is the total limit of the company's liability for all damages and all loss under coverages B and C combined arising out of physical injury to, destruction or loss of property, including the loss of use of any property due to such injury or destruction under coverage B.

Under coverage C, the limit of the company's liability for loss shall not exceed the actual cash value of the property, or if the loss is of a part thereof the actual cash value of such part, at time of loss, not what it would then cost to repair or replace the property or such part thereof with other of like kind and quality.

5. Severability of Interests - Coverages A and B: The term "the insured" is used severally and not collectively, but the inclusion herein of more than one insured shall not operate to increase the limits of the company's liability.

6. Notice: In the event of an occurrence or loss, written notice containing particulars sufficient to identify the insured and also reasonably obtainable information with respect to the time, place and circumstances thereof, and the names and addresses of the injured and of available witnesses, shall be given by or for the insured to the company or any of its authorized agents as soon as practical. If claim is made or suit is brought against the insured, he shall immediately forward to the company every demand, notice, summons or other process received by him or his representative.

7. Assistance and Cooperation of the Insured - Coverages A and B: The insured shall cooperate with the company and, upon the company's request, attend hearings and trials and assist in making settlements, securing and giving evidence, obtaining the attendance of witnesses and in the conduct of suits. The insured shall not, except at his own cost, voluntarily make any payment, assume any obligation or incur any expense other than for such immediate medical and surgical relief to others as shall be imperative at the time of accident.

8. Action Against Company - Coverages A and B: No action shall lie against the company unless, as a condition precedent thereto, the insured shall have fully complied with all the terms of this policy, nor until the amount of the insured's obligation to pay shall have been finally determined either by judgment against the insured after actual trial or by written agreement of the insured, the claimant and the company.

Any person or organization or the legal representative thereof who has secured such judgment or written agreement shall thereafter be entitled to recover under this policy to the extent of the insurance afforded by this policy. No person or organization shall have any right under this policy to join the company as a party to any action against the insured to determine the insured's liability. Bankruptcy or insolvency of the insured or of the insured's estate shall not relieve the company of any of its obligations hereunder.

9. Action Against Company - Coverage C: No action shall lie against the company unless, as a condition precedent thereto, there shall have been full compliance with all the terms on this policy nor until 30 days after proof of loss is filed and the amount of loss is determined as provided in this policy.

10. Insured's Duties in Event of Loss - Coverage C: In the event of loss the insured shall:

(a) protect the property, whether or not the loss is covered by this policy, and any further loss due to the insured's failure to protect shall not be recoverable under this policy; reasonable expenses incurred in affording such protection shall be deemed incurred at the company's request.

(b) file with the company, as soon as practicable after loss, his sworn proof of loss in such form and including such information as the company may reasonably require and shall upon the company's request, exhibit the damaged property.

11. Appraisal - Coverage C: If the insured and the company fail to agree as to the amount of loss, either may, within 60 days after the proof of loss is filed, demand an appraisal of the loss. In such event the insured and the company shall each select a competent appraiser, and the appraisers shall select a competent and disinterested umpire. The appraisers shall state separately the actual cash value and the amount of loss and failing to agree shall submit their differences to the umpire. An award in writing of any two shall determine the amount of loss. The insured and the company shall each pay his chosen appraiser and shall bear equally the other expenses of the appraisal and umpire.

The company shall not be held to have waived any of its rights by any act relating to appraisal.

12. Payment of Loss - Coverage C: The company may pay for the loss in money but there shall be no abandonment of the damaged property to the company.

13. No Benefit to Bailee - Coverage C: The insurance afforded by this policy shall not enure directly or indirectly to the benefit of any carrier or bailee, other than the named insured, liable for loss to the property.

14. Subrogation: In the event of any payment under this policy, the company shall be subrogated to all the insured's rights of recovery therefor against any person or organization and the insured shall execute and deliver instruments and papers and do whatever else is necessary to secure such rights. The insured shall do nothing after loss to prejudice such rights.

15. Application of Insurance: The insurance afforded by this policy is primary insurance.

16. Three Year Policy: A policy period of 3 years is comprised of 3 consecutive annual periods. Computation and adjustment of earned premium shall be made at the end of each annual period. Aggregate limits of liability as stated in this policy shall apply separately to each annual period.

17. Changes: Notice to any agent or knowledge possessed by any agent or by any other person shall not effect a waiver or a change in any part of this policy or stop the company from asserting any right under the terms of this policy; nor shall the terms of this policy be waived or changed, except by endorsement issued to form a part of this policy [signed by ——— ——————————————— (here insert titles of authorized company officials or representatives); provided, however, changes may be made in the written portion of the declaration by ——————————— (here insert titles of authorized company representatives) when initialed by such ——————————————— (here insert titles of authorized company representatives) or by endorsement issued to form a part of this policy signed by such ——————————————— (here insert titles of authorized company representatives).

18. Assignment: Assignment of interest under this policy shall not bind the company until its consent is endorsed hereon.

19. Cancellation: This policy may be cancelled by the named insured by mailing to the company written notice stating when thereafter the cancellation shall be effective. This policy may be cancelled by the company by mailing to the named insured, contractor and governmental authority at the respective addresses shown in this policy written notice stating when not less than 30 days thereafter such cancellation shall be effective. The mailing of notice as aforesaid shall be sufficient proof of notice. The effective date and hour of cancellation stated in the notice shall become the end of the policy period. Delivery of such written notice either by the named insured or by the company shall be equivalent to mailing.

If the named insured cancels, earned premium shall be computed in accordance with the customary short rate table and procedure. If the company cancels, earned premium shall be computed pro rata. Premium adjustment may be made either at the time cancellation is effected or as soon as practical after cancellation becomes effective, but payment or tender of unearned premium is not a condition of cancellation.

20. Declarations: By acceptance of this policy the named insured agrees that such statement in the declarations as are made by him are his agreements and representations, that this policy is issued in reliance upon the truth of such representations and that this policy embodies all agreements existing between himself and the company or any of its agents relating to this insurance.

(For policy issued by one company)

In witness whereof, the Blank Indemnity Company has caused this policy to be signed by this president and a secretary at ———————————— and countersigned on the declarations page by a duly authorized agent of the company.

(FACSIMILE OF SIGNATURE) (FACSIMILE OF SIGNATURE)
Secretary President

(For policy issued by two companies)

In witness whereof, the Blank Indemnity Company has caused this policy with respect to coverages ———————————— and such other parts of the policy as are applicable thereto, to be signed by its president and a secretary at ————————————, and countersigned on the declarations page by a duly authorized agent of the company.

(FACSIMILE OF SIGNATURE) (FACSIMILE OF SIGNATURE)
Secretary President

In witness whereof, the Blank Insurance Company has caused this policy, with respect to coverages ———————————— and such other parts of the policy as are applicable thereto, to be signed by its president and a secretary at ————————————, and countersigned on the declarations page by a duly authorized agent of the company.

(FACSIMILE OF SIGNATURE) (FACSIMILE OF SIGNATURE)
Secretary President

LOUISIANA
DEPARTMENT OF TRANSPORTATION AND DEVELOPMENT
SUPPLEMENTAL SPECIFICATIONS
(FOR 2006 STANDARD SPECIFICATIONS)

TABLE OF CONTENTS

PART I – GENERAL PROVISIONS

SECTION 101 – GENERAL INFORMATION, DEFINITIONS, AND TERMS
Subsection 101.03 – Definitions 1
SECTION 102 – BIDDING REQUIREMENTS
Subsection 102.09 – Proposal / Bid Guaranty 1
SECTION 107 – LEGAL RELATIONS AND RESPONSIBILITY TO PUBLIC
Subsection 107.05 – Federal Aid Participation 2
SECTION 108 – PROSECUTION AND PROGRESS
Subsection 108.04 – Prosecution of Work 2

PART II – EARTHWORK

SECTION 202 – REMOVING OR RELOCATING STRUCTURES AND OBSTRUCTIONS
Subsection 202.06 – Plugging or Relocating Existing Water Wells 2

PART III – BASE COURSES

SECTION 302 – CLASS II BASE COURSE
Subsection 302.05 – Mixing 2
SECTION 305 – SUBGRADE LAYER
Subsection 305.06 – Payment 2
SECTION 307 – PERMEABLE BASES
Subsection 307.02 – Materials 3
SECTION 308 – IN-PLACE CEMENT TREATED BASE COURSE
All Subsections 3

PART V – ASPHALTIC PAVEMENTS

SECTION 502 – SUPERPAVE ASPHALTIC CONCRETE MIXTURES
Subsection 502.02 – Materials 3
Subsection 502.14 – Lot Sizes 4
SECTION 508 – STONE MATRIX ASPHALT
Subsection 508.01 – Description 5
Subsection 508.02 – Materials 5

PART VI – RIGID PAVEMENT

SECTION 602 – PORTLAND CEMENT CONCRETE PAVEMENT REHABILITATION
Subsection 602.17 – Payment 5

PART VII – INCIDENTAL CONSTRUCTION

SECTION 701 – CULVERTS AND STORM DRAINS
All Subsections 5
SECTION 704 – GUARD RAIL
Subsection 704.03 – General Construction Requirements 16
SECTION 706 – CONCRETE WALKS, DRIVES AND INCIDENTAL PAVING
All Subsections 16
SECTION 713 – TEMPORARY TRAFFIC CONTROL
Subsection 713.06 – Pavement Markings 18
SECTION 729 – TRAFFIC SIGNS AND DEVICES
Subsection 729.02 – Materials 19
Subsection 729.04 – Fabrication of Sign Panels and Markers 20

PART VIII – STRUCTURES

SECTION 804 – DRIVEN PILES
Subsection 804.08 – Construction Requirements 20

PART IX – PORTLAND CEMENT CONCRETE

SECTION 901 – PORTLAND CEMENT CONCRETE
Subsection 901.06 – Quality Control of Concrete 20
Subsection 901.08 – Composition of Concrete 20

PART X – MATERIALS

SECTION 1001 – HYDRAULIC CEMENT
Subsection 1001.01 – Portland Cement 21
SECTION 1003 – AGGREGATES
Subsection 1003.02 – Aggregates for Portland Cement Concrete and Mortar 21
SECTION 1005 – JOINT MATERIALS FOR PAVEMENTS AND STRUCTURES
Subsection 1005.04 – Combination Joint Former/Sealer 22
SECTION 1006 – CONCRETE AND PLASTIC PIPE
Subsection 1006.09 – Plastic Yard Drain Pipe 23

SECTION 1013 – METALS
Subsection 1013.09 – Steel Piles 23
SECTION 1015 – SIGNS AND PAVEMENT MARKINGS
Subsection 1015.04 – Sign Panels 23
Subsection 1015.05 – Reflective Sheeting 24
Subsection 1015.11 – Preformed Plastic Pavement Marking Tape 28
SECTION 1020 – TRAFFIC SIGNALS
Subsection 1020.01 – Traffic Signal Heads 29
Subsection 1020.04 – Poles for Traffic Signal Systems 30

LOUISIANA
DEPARTMENT OF TRANSPORTATION AND DEVELOPMENT
SUPPLEMENTAL SPECIFICATIONS

The 2006 Louisiana Standard Specifications for Roads and Bridges and supplemental specifications thereto are amended as follows.

PART I – GENERAL PROVISIONS

SECTION 101 – GENERAL INFORMATION, DEFINITIONS, AND TERMS:
Subsection 101.03 – Definitions (07/07), Pages 3 – 13).

Delete the definition for "Proposal/Bid Guaranty" and substitute the following.

Proposal / Bid Guaranty. The required security furnished with a bid. The only form of security acceptable is a Bid Bond.

SECTION 102 – BIDDING REQUIREMENTS:
Subsection 102.09 – Proposal / Bid Guaranty (07/07), Page 19.

Delete the contents of this subsection and substitute the following.

PROPOSAL/BID GUARANTY. Each bid shall be accompanied by a proposal/bid guaranty in an amount not less than five percent of the total bid amount when the bidder's total bid amount as calculated by the Department in accordance with Subsection 103.01 is greater than $50,000. No proposal/bid guaranty is required for projects when the bidder's total bid amount as calculated by the Department is $50,000 or less. The official total bid amount for projects that include alternates is the total of the bidder's base bid and all alternates bid on and accepted by the Department. The proposal/bid guaranty submitted by the bidder shall be a bid bond made payable to the contracting agency as specified on the bid bond form provided in the construction proposal. No other form of security will be accepted.

The bid bond shall be on the "Bid Bond" form provided in the construction proposal, on a form that is materially the same in all respects to the "Bid Bond" form provided, or on an electronic form that has received Department approval prior to submission. The bid bond shall be filled in completely, shall be signed by an authorized officer, owner or partner of the bidding entity, or each entity representing a joint venture; shall be signed by the surety's agent or attorney-in-fact; and shall be accompanied by a notarized document granting general power of attorney to the surety's signer. The bid bond shall not contain any provisions that limit the face amount of the bond.

The bid bond will be written by a surety or insurance company that is in good standing and currently licensed to write surety bonds in the State of Louisiana by the Louisiana Department of Insurance and also conform to the requirements of LSA-R.S. 48:253.

All signatures required on the bid bond may be original, mechanical reproductions, facsimiles or electronic. Electronic bonds issued in conjunction with electronic bids must have written Departmental approval prior to use. The Department will make a listing of approved electronic sureties providers on the Bidx.com site.

SECTION 107 – LEGAL RELATIONS AND RESPONSIBILITY TO PUBLIC:
Subsection 107.05 – Federal Aid Participation (04/08), Pages 57 and 58.

Delete the second paragraph.

SECTION 108 – PROSECUTION AND PROGRESS:
Subsection 108.04 – Prosecution of Work (03/05) Pages 74 and 75.

Add the following sentence to the third paragraph of Heading (b).

Should the surety or the Department take over prosecution of the work, the contractor shall remain disqualified for a period of one year from the completion of the project, unless debarment proceedings are instituted.

When the Department of Transportation and Development is not the contracting agency on the project, the second paragraph under Heading (c) is deleted.

PART II – EARTHWORK

SECTION 202 – REMOVING OR RELOCATING STRUCTURES AND OBSTRUCTIONS:
Subsection 202.06 – Plugging or Relocating Existing Water Wells (03/04), Page 105.

Delete the first sentence and substitute the following.

All abandoned wells shall be plugged and sealed at the locations shown on the plans, or as directed by the engineer, in accordance with the "Water Well Rules, Regulations, and Standards, State of Louisiana." This document is available at the Department of Transportation and Development, Water Resources Section, P. O. Box 94245, Baton Rouge, Louisiana 70804-9245. The Water Resource Section's telephone number is (225) 274-4172.

PART III – BASE COURSES

SECTION 302 – CLASS II BASE COURSE:
Subsection 302.05 – Mixing (08/06), Pages 152 and 153.

Delete the first sentence of Subheading (b)(1), In-Place Mixing, and substitute the following.

In-place mixing shall conform to Heading (a)(1) except that the percentage of Type I portland cement required will be 6 percent by volume.

SECTION 305 – SUBGRADE LAYER:
Subsection 305.06 – Payment (01/08), Page 184.

Delete the contents of this subsection and substitute the following.

305.06 Payment. Payment for subgrade layer will be made at the contract unit price which includes lime, lime treatment, cement, cement treatment, water, stone, recycled portland cement concrete, crushed slag, blended calcium sulfate, asphaltic concrete, and asphalt curing membrane or prime coat, subject to the payment adjustment provisions of Section 1002 for specification deviations of asphalt materials and Subsection 303.11(a) for density deficiencies of cement treated materials. Adjustments in pay for increase or decrease in the percent cement ordered by the engineer will be in accordance with Subsection 303.13. Adjustments in pay for

increase or decrease in the percent lime ordered by the engineer will be based on the price of lime shown on paid invoices (total of all charges). The Materials and Testing Section will provide the payment adjustment percentage for properties of asphalt materials.

Payment for geotextile fabric will be included in the contract unit price for subgrade layer.

Payment will be made under:

Item No.	Pay Item	Pay Unit
305-01	Subgrade Layer _____in (mm) Thick	Square Yard (Sq m)

SECTION 307 – PERMEABLE BASES:

Subsection 307.02 – Materials (09/07), Pages 187 and 188.

Delete the contents of Subheading (b), Asphalt, and substitute the following.

(b) Asphalt: The asphalt for asphalt treated permeable base shall be an approved polymer modified asphalt cement, PG 76-22m, or PG 82-22rm complying with Section 1002. The percentage of asphalt cement shall be 2.0 percent to 4.0 percent by weight (mass) of the total mixture. Asphalt cement content and mixing process shall be such that all aggregates are visibly coated. The mixture shall retain 90 percent coating when tested in accordance with DOTD TR 317.

A job mix formula shall be submitted and approved in accordance with Section 502.

SECTION 308 – IN-PLACE CEMENT TREATED BASE COURSE:

All Subsections within Section 308 – (07/07), Pages 191 – 198.

Whenever the reference to "DOTD TR-432, Method D" is used, it shall mean "DOTD TR-432".

PART V – ASPHALTIC PAVEMENTS

SECTION 502 – SUPERPAVE ASPHALTIC CONCRETE MIXTURES:

Subsection 502.02 – Materials (08/06) (11/07), Pages 210 – 213.

Delete Table 502-2, Superpave Asphalt Cement Usage under Subheading (a) and substitute the following.

Table 502-2
Superpave Asphalt Cement Usage

Current Traffic Load Level	Mixture Type	Grade of Asphalt Cement
Level 1	Wearing Course	PG 70-22m
	Binder Course	PG 70-22m
	Base Course	PG 64-22
Level 2	Wearing Course	PG 76-22m
	Binder Course	PG 76-22m
Level A	Incidental Paving	PG 70-22m

Note: A PG 82-22 rm, Waste Tire Rubber Modified Asphalt, may be substituted for any other grade of asphalt cement.

Delete Table 502-3, Aggregate Friction Rating under Subheading (c)(1) and substitute the following.

Table 502-3
Aggregate Friction Rating

Friction Rating	Allowable Usage
I	All mixtures
II	All mixtures
III	All mixtures, except travel lane wearing courses with plan ADT greater than 7000[1]
IV	All mixtures, except travel lane wearing courses[2]

[1] When plan current average daily traffic (ADT) is greater than 7000, blending of Friction Rating III aggregates and Friction Rating I and/or II aggregates will be allowed for travel lane wearing courses at the following percentages. At least 30 percent by weight (mass) of the total aggregates shall have a Friction Rating of I, or at least 50 percent by weight (mass) of the total aggregate shall have a Friction Rating of II. The frictional aggregates used to obtain the required percentages shall not have more than 10 percent passing the No. 8 (2.36 mm) sieve.

[2] When the average daily traffic (ADT) is less than 2500, blending of Friction Rating IV aggregates with Friction Rating I and/or II aggregates will be allowed for travel lane wearing courses at the following percentages. At least 50 percent by weight (mass) of the total aggregate in the mixture shall have a Friction Rating of I or II. The frictional aggregates used to obtain the required percentages shall not have more than 10 percent passing the No. 8 (2.36 mm) sieve.

Subsection 502.14 – Lot Sizes (11/07), Pages 232 and 233.

Delete the first sentence of the first paragraph and substitute the following.

A lot is a segment of continuous production of asphaltic concrete mixture from the same job mix formula produced for the Department at a specific plant, delivered to a specific DOTD project.

SECTION 508 – STONE MATRIX ASPHALT:

Subsection 508.01 – Description (09/07), Page 274.

Delete this subsection and substitute the following.

508.01 DESCRIPTION. This work consists of furnishing and constructing Stone Matrix Asphalt (SMA) which is a plant mixed asphalt concrete wearing course for high traffic applications. This mixture is a rut resistant hot mix design with stone on stone contact. The mixture shall be composed of a PG 76-22m, or PG 82-22rm asphalt cement and a gap graded coarse aggregate structure. Mineral filler and/or fibers shall be used to control draindown. This work shall be in accordance with these specifications, plan details, and as directed. All requirements of Section 502 apply to Stone Matrix Asphalt, except as modified herein. All plant and paving equipment and processes must meet the requirements of Section 503.

Mixture used for shoulder may be Stone Matrix Asphalt or any mixture type shown in Table 502-5.

Subsection 508.02 – Materials (09/07), Page 274.

Delete the contents of subheading (a), Asphalt Cement and substitute the following.

(a) Asphalt Cement: Asphalt cement shall be PG 76-22m, or PG 82-22rm as listed on QPL 41 and complying with Section 1002.

PART VI – RIGID PAVEMENT

SECTION 602 – PORTLAND CEMENT CONCRETE PAVEMENT REHABILITATION:

Subsection 602.17 – Payment (09/07), Pages 341 – 344.

Delete the last paragraph of Subheadings (d), Full Depth Corner Patching of Jointed Concrete Pavement, (e) Full Depth Patching of Jointed Concrete Pavement, and (g) Patching Continuously Reinforced Concrete Pavement, and substitute the following.

Payment for deteriorated base course removed as directed by the engineer and replaced with concrete will be made as follows: The value per inch (mm) thickness will be determined by dividing the contract unit price per square yard (sq m) by the plan thickness. Thickness of patches will be measured from the surface that exists at the time of patching. Payment for the additional thickness will be made at 50 percent of the value per inch (mm) thus determined.

PART VII – INCIDENTAL CONSTRUCTION

SECTION 701 – CULVERTS AND STORM DRAINS:

All Subsections within Section 701 (08/07), Pages 347 – 358.

Delete Section 701, Culverts and Storm Drains and substitute the following.

SECTION 701
CULVERTS AND STORM DRAINS

701.01 DESCRIPTION. This work consists of furnishing, installing, and cleaning pipe, pipe arch, storm drains and sewers, also referred to as culverts or conduit, in accordance with these specifications and in conformity with lines and grades shown on the plans or established.

701.02 MATERIALS. Materials shall comply with the following sections and subsections:

Usable Soil	203.06(a)
Selected Soil	203.06(b)
Plastic Soil Blanket	203.10
Mortar	702.02
Flowable Fill	710
Portland Cement Concrete	901
Reclaimed Asphaltic Pavement (RAP)	1003.01 & 1003.04(d)
Stone	1003.03(b)
Recycled Portland Cement Concrete	1003.03(c)
Granular Material	1003.07
Bedding Material	1003.08
Concrete Sewer Pipe	1006.02
Reinforced Concrete Pipe	1006.03
Reinforced Concrete Pipe Arch	1006.04
Gasket Materials	1006.06
Plastic Pipe	1006.07
Split Plastic Coupling Bands	1006.07(d)(4)
Plastic Yard Drain Pipe	1006.09
Bituminous Coated Corrugated Steel Pipe and Pipe Arch	1007.02
Structural Plate for Pipe, Pipe Arch and Arch	1007.04
Corrugated Aluminum Pipe and Pipe Arch	1007.05
Coupling Bands	1007.09
Reinforcing Steel	1009
Geotextile Fabric	1019

(a) Side Drain Pipe or Side Drain Pipe Arch: When the item for Side Drain Pipe or Side Drain Pipe Arch is included in the contract, the contractor has the option of furnishing reinforced concrete pipe or reinforced concrete pipe arch, corrugated metal pipe or corrugated metal pipe arch, or plastic pipe, as allowed by EDSM II.2.1.1 or unless otherwise specified.

(b) Cross Drain Pipe or Cross Drain Pipe Arch: When the item for Cross Drain Pipe or Cross Drain Pipe Arch is included in the contract, the contractor has the option of furnishing reinforced concrete pipe or reinforced concrete pipe arch, corrugated metal pipe or corrugated metal pipe arch, or plastic pipe, as allowed by EDSM II.2.1.1 or unless otherwise specified.

(c) Storm Drain Pipe or Storm Drain Pipe Arch: When the item for Storm Drain Pipe or Storm Drain Pipe Arch is included in the contract, the contractor has the option of furnishing reinforced concrete pipe or reinforced concrete pipe arch, or plastic pipe, as allowed by EDSM II.2.1.1 or unless otherwise specified.

(d) Yard Drain Pipe: When the item for Yard Drain Pipe is included in the contract, the contractor has the option of furnishing concrete sewer pipe, plastic yard drain pipe or plastic pipe in accordance with Section 1006 unless otherwise specified.

(e) Material Type Abbreviations:

(1) Reinforced Concrete Pipe:

RCP	Reinforced Concrete Pipe
RCPA	Reinforced Concrete Pipe Arch

(2) Corrugated Metal Pipe:

CAP	Corrugated Aluminum Pipe
CAPA	Corrugated Aluminum Pipe Arch
CMP	Corrugated Metal Pipe
CMPA	Corrugated Metal Pipe Arch
CSP	Corrugated Steel Pipe
CSPA	Corrugated Steel Pipe Arch
BCCSP	Bituminous Coated Corrugated Steel Pipe
BCCSPA	Bituminous Coated Corrugated Steel Pipe Arch

(3) Plastic Pipe:

PP	Plastic Pipe
PVCP	Polyvinyl Chloride Pipe
RPVCP	Ribbed Polyvinyl Chloride Pipe
CPEPDW	Corrugated Polyethylene Pipe Double Wall

(f) Joint Type Abbreviations:

T1	Type 1 Joint
T2	Type 2 Joint
T3	Type 3 Joint

(g) Quality Assurance for Pipe: Manufacturing plants will be periodically inspected for compliance with specified manufacturing methods, and material samples will be randomly obtained for laboratory testing for verification of manufacturing lots. Materials approved at the manufacturing plant will be subject to visual acceptance inspections at the jobsite or point of delivery.

701.03 EXCAVATION. For all pipe, when the sides of the trench are stable as evidenced by the sides of the trench being able to maintain a vertical cut face, the minimum trench width at the bottom of the excavation will be 18 inches (460mm) on either side of the outside diameter of the pipe. If the sides of the trench are unstable, the width of the trench at the bottom of the excavation, for plastic or metal pipe, shall be a minimum width of at least 18 inches (460mm) or one pipe diameter on each side of the outside diameter of the pipe, which ever is greater. Surplus material or excavated material that does not conform to the requirements of Subsection 203.06(a) shall be satisfactorily disposed of in accordance with Subsection 202.02. Moisture controls

including backfill materials selection and dewatering using sumps, wells, well points or other approved processes may be necessary to control excess moisture during excavation, installation of bedding, over-excavated trench backfilling, pipe placement and pipe backfill.

(a) Over-excavation: When unsuitable soils as defined in Subsection 203.04 or a stable, non-yielding foundation cannot be obtained at the established pipe grade, or at the grade established for placement of the bedding, unstable or unsuitable soils below this grade shall be removed and replaced with granular material meeting the requirements of Subsection 1003.07, bedding materials meeting the requirements of Subsection 1003.08 or Type A backfill. All granular, backfill materials placed below the established pipe or bedding grade shall be placed in lifts not exceeding 8 inches (200 mm) thick and sufficiently compacted by hand or a dynamic mechanical hand compaction device over the surface of each lift to form a stable, non-yielding foundation at the surface of the established bedding or pipe grade.

When rock is encountered, it shall be removed below grade and replaced with material complying with Subsection 1003.07, bedding materials meeting the requirements of Subsection 1003.08 or Type A backfill. The compacted earth cushion shall have a thickness under the pipe of at least 1/2 inch per foot (40 mm/m) of fill height over the top of the pipe with a minimum thickness of 8 inches (200 mm). All granular, backfill materials placed below the established pipe or bedding grade shall be placed in lifts not exceeding 8 inches (200 mm) thick and sufficiently compacted by hand or a dynamic mechanical hand operated compaction device over the surface of each lift to form a stable, non-yielding foundation at the surface of the established bedding or pipe grade.

Materials used to backfill in an over-excavated portion of a trench do not require encasement in a Geotextile Fabric.

Density of approved materials placed in over-excavated trenches will not be measured or determined.

701.04 FORMING PIPE BED. Bedding material, when specified, shall be constructed in accordance with Section 726. Materials allowed for bedding shall be as specified in Subsection 1003.08 or may be Type A backfill materials. When bedding materials are specified, additional excavation shall be performed below established pipe grade and the bedding material placed in lifts not exceeding 8 inches (200 mm) thick and lightly compacted by hand or a dynamic hand compaction device over the surface of each lift.

When the bottom of the pipe is not laid in a trench but is constructed above natural soils, a uniform bed shall be constructed as specified for the bottom of a trench.

Density of approved bedding materials will not be measured or determined.

701.05 LAYING PIPE. Pipe laying shall begin at the downstream end of the line. The pipe shall be in contact with the foundation throughout its length. Bell or groove ends of pipe and outside circumferential laps of riveted metal pipe shall be placed facing upstream. Riveted seam metal pipe shall be placed with longitudinal laps at sides. Pipes in each continuous line shall have the same wall thickness. Metal pipes provided with lifting lugs shall be handled only by these lugs.

After pipe has been laid and before backfill is placed, the engineer will inspect the pipe for alignment, grade, integrity of joints, and coating damage.

701.06 JOINING PIPE.

(a) Joint Usage:

(1) Type 1 (T1) joints shall be used for side drains under drives and similar installations.

(2) Type 2 (T2) joints shall be used for cross drains under roadways, including turnouts.

(3) Type 3 (T3) joints shall be used for closed storm drain systems, flumes and siphons.

(b) Concrete Pipe: Concrete pipe may be either bell and spigot, or tongue and groove. The method of joining pipe sections shall be such that ends are fully entered and inner surfaces are flush and even.

An approved mechanical pipe puller shall be used for joining pipes over 36 inches (900 mm) in diameter. For pipe 36 inches (900 mm) or less in diameter, any approved method for joining pipe may be used which does not damage the pipe.

Joints shall comply with Subsection 1006.05, and shall be sealed with gasket material installed in accordance with the manufacturer's recommendations.

(c) Metal Pipe: Metal pipe shall be firmly joined by coupling bands. Bands shall be centered over the joint.

For Type 1 joints, approved gasket material shall be placed in one corrugation recess on each side of the joint at the coupling band and on each band connection in such manner to prevent leakage.

When Type 2 or 3 joints are specified, joining of metal pipe sections shall conform to the following provisions:

(1) General: Band joints shall be sealed with gasket material. Gasket material shall be placed in accordance with the plan details.

(2) Circular Section: Connecting bands shall be of an approved design and shall be installed in accordance with plan details.

(3) Arch Section: Connecting bands shall be a minimum of 12 inches (300 mm) wide for pipe arch less than 36 inches (900 mm) round equivalent diameter, and a minimum of 21 inches (525 mm) wide for 36 inches (900 mm) round equivalent diameter pipe arch and greater. Bands shall be connected at the ends by approved angle or strap connections. Connecting bands used for 36 inches (900 mm) round equivalent diameter pipe arch and above shall be 2-piece bands.

(d) Plastic Pipe: Joints for plastic pipe shall be either bell and spigot or split coupling bands.

(1) Bell and Spigot Type Joint System: The method of joining pipe sections shall be such that ends are fully entered and inner surfaces are flush and even.

Any approved method for joining pipe may be used which does not damage the pipe.

Joints shall be approved and shall be sealed with a gasket system utilizing gasket material complying with Subsection 1006.06(a).

(2) Split Coupling Type Joint System: Split coupling bands shall comply with all dimensional and material requirements of Subsection 1006.07. The bands shall be centered over the joint. The split coupling band shall be secured to the pipe with a minimum of five stainless steel or other approved corrosion resistant bands.

Joints shall be approved and shall be sealed with gasket material. Gasket material shall be placed in the first two corrugation recesses on each side of the pipe connections. Gasket material shall also be placed on each band connection to prevent leakage. When flexible plastic gasket material is used it shall be a minimum of 1/2 inch (13 mm) in size. The bands shall be tightened to create overlap of the band and shall adequately compress the gasket material.

(e) Connections: Approved connections shall be used when joining new pipes to existing pipes. When concrete collars are required in order to extend the ends of existing pipes that have been damaged or to join different types or sizes of pipes, the concrete collars shall be constructed in accordance with plan details, the applicable requirements of Section 901, and as directed.

(f) Geotextile Fabric, Pipe Joints: For concrete, metal and plastic pipes, Types 2 and 3 joints shall be wrapped with geotextile fabric for a minimum of 12 inches (300 mm) on each side of joint for pipe 36 inches (900 mm) or less in diameter and a minimum of 18 inches (450 mm) on each side of the joint for pipe greater than 36 inches (900 mm) in diameter. Ends of the fabric shall be lapped at least 10 inches (250 mm). The edges and ends of fabric shall be suitably secured for the entire circumference of the pipe.

701.07 RELAYING PIPE. If specified or directed, existing pipes shall be removed and suitable sections relaid as specified for new pipes.

701.08 BACKFILLING.

(a) General: Prior to backfilling, pipes found to be damaged or out of alignment or grade shall be removed and reinstalled, or replaced.

Type A backfill material shall be stone, recycled portland cement concrete, flowable fill, or RAP.

Type B backfill materials are selected soils. Where Type B backfill materials are called for, Type A backfill materials may be substituted.

When corrugated metal pipe is used, the backfill material shall be tested and shall have a resistivity greater than 1500 ohm-cm and a pH greater than 5 when tested in accordance with DOTD TR 429 and DOTD TR 430 respectively.

When Type A backfill material is used, geotextile fabric surrounding this backfill shall be placed in accordance with Subsection 726.03 between the aggregate backfill material and all other natural or placed soils in the trench or embankment. Care shall be taken to prevent damage to geotextile fabric during placement of backfill material. For concrete pipe, the fabric shall enclose not only the initial backfill but shall be wrapped over the top of the pipe with at least 12 inches (300 mm) of overlap.

When a trench box or trench sheeting is used in unstable soils and/or for worker safety, and when moved during backfilling operations, filling and additional compaction of the disturbed zone of backfill must take place immediately and in a manner acceptable to the engineer.

Initial backfill is a structural backfill encasing the pipe from the bottom of the pipe to the springline for concrete pipe and to a point one foot (0.3 m) above the top of the pipe for both metal and plastic pipe. Final backfill is not a structural backfill and shall extend from the top of the initial backfill to the top of the natural ground or subgrade in cut areas or to the top of existing ground in fill areas. Any fill required above the final backfill is considered and treated as embankment.

(b) Backfill Applications: For projects using A+B+C bidding method where rigid and flexible pavement alternates are considered, backfill application (2) below, "Cross Drains Under Flexible Pavements", shall apply for either rigid or flexible pavements.

(1) Under Concrete Pavements: Type B backfill may be used as initial and final backfill for all pipes, culverts or drains under concrete pavements. Placement and compaction shall be as specified in Heading (d) below.

(2) Cross Drains Under Flexible Pavements: All reaches, exclusive of those portions of the pipe which are under shoulders, of cross drains and all other culverts, pipes or drains that cross the centerlines of the new roadway or centerlines of existing roadways, such as intersections and are under flexible pavements shall receive an initial backfill of Type A material. Type B backfill materials may be used as final backfill for all pipes. Placement and compaction shall be as specified in Heading (c) and (d) below. Where the subgrade is above existing ground, embankment material as specified for the remainder of the project shall be used from the top of the final backfill to the top of the established embankment grade.

(3) Other Drains Under Flexible Pavements: All reaches of all culverts, pipes or drains under flexible pavements that do not cross the centerlines of new roadway or centerlines of existing roadways, and exclusive of those portions of the pipe which are totally under shoulders, shall receive an initial and final backfill of Type B material. Placement and compaction shall be as specified in Heading (d) below. Where the subgrade is above existing ground, embankment material as specified for the remainder of the project shall be used from the top of the final backfill to the top of the established embankment grade.

(4) Other Areas: All culverts, pipes or drains in nonpaved areas or paved areas that serve as driveways or shoulders shall receive an initial and final backfill of Type B material. Placement and compaction shall be as specified in Heading (d) below.

(5) Pipes Subject to Construction Traffic; The embankment or pipe backfill shall be constructed to a minimum of 24 inches (600 mm) over the pipe before heavy construction equipment is allowed to cross the installation. Where practical, installations with less than 24 inches (600 mm) of cover over the top of the pipe shall be constructed after heavy hauling is completed over the pipe location. After completion of hauling operations, the contractor shall remove excess cover material. Pipe damaged by hauling and backfilling operations shall be removed and reinstalled, or replaced, at no direct pay.

(c) Placement and Compaction; Type A Backfill: For all pipes, culverts and conduits under paved and nonpaved areas, where Type A backfill material is used, the Type A backfill shall be thoroughly hand compacted under the pipe haunches and then dynamically compacted in layers not exceeding 8 inches (200 mm) compacted thickness. Compaction under the haunches of the pipe shall initially be by hand tamping or other acceptable means, until a level is reached that the dynamic tamping can commence. Each lift shall be compacted by applying at least eight

passes of a hand operated, dynamic mechanical compaction device over the surface of each lift. With approval of the engineer, layer thickness may be increased to 12 inches (300 mm) with verification of satisfactory installation and performance. If flowable fill is used it shall be furnished, placed and consolidated in accordance with Section 710. The contractor shall control placement operations during initial backfill operations so as not to damage protective coatings on metal pipes. The contractor shall repair damaged coatings at no additional pay.

(d) Placement and Compaction; Type B Backfill: For all pipes, culverts and conduits, where Type B backfill is allowed, the Type B material shall be placed in layers not exceeding 8 inches (200 mm) compacted thickness. Compaction shall be with suitable mechanical equipment. With approval of the engineer, layer thickness may be increased to 12 inches (300 mm) with verification of satisfactory installation and performance.

(e) Placement and Compaction; Trenchless or Partial Trench Condition: All pipes, culverts, drains and conduits placed with any portion of the pipe above existing ground must also comply with Subsections (a),(b) (c) and (d) above for the portion of the pipe within a trench and that portion of the pipe not constructed in a trench. The width of initial and final backfill of that portion above existing ground and not within a trench will be constructed to such a width that the requirements for placement, compaction and density are met.

(f) Density Requirements: The in place density of Type A backfill materials and bedding materials, will not be measured or determined. Type A backfill, exclusive of RAP and flowable fill, shall be placed at or near optimum moisture content determined in accordance with DOTD TR 415 or 418. RAP materials shall be placed and compacted in a slightly moist condition.

The maximum dry density of initial or final Type B backfill under all paved areas which are to be under traffic will be determined in accordance with DOTD TR 415 or TR 418 and in-place density determined in accordance with DOTD TR 401. Initial and final Type B backfill under all paved areas, under traffic, shall be placed at or near optimum moisture content determined in accordance with DOTD TR 415 or TR 418. Each layer shall be compacted by approved methods prior to the placement of a subsequent layer. The engineer will approve the compaction method based upon validation that such method, including moisture control, will achieve at least 95 percent of maximum dry density as determined in accordance with DOTD TR 401. With approval of the engineer, density testing may be waived on subsequent layers with backfill installation in accordance with approved compaction methods and continued satisfactory performance.

Initial and final backfill in unpaved areas or paved areas such as shoulders or driveways, shall be placed evenly and compacted along the length of the culvert, pipe or drain from the top of the initial backfill to the top of the subgrade. Layered backfill shall be compacted at least to the density of the adjoining existing soils or the compaction required of the laterally adjoining layers of soil immediately outside the trench for embankment elevations. Initial and final backfill shall be placed and compacted at or near optimum moisture content determined in accordance with DOTD TR 415 or TR 418.

701.09 INSPECTION OF PIPES. After completion of embankment and prior to roadway surfacing, the engineer shall inspect pipes for proper alignment and integrity of joints. Any misaligned pipe or defective joints shall be corrected by the contractor at no direct pay.

(a) Plastic Pipe: Installed plastic pipe shall be tested to ensure that vertical deflections do not exceed 5.0 percent. Maximum allowable deflections shall be governed by the mandrel requirements stated herein.

Deflection tests shall be performed no sooner than 30 calendar days after installation and compaction of backfill. The pipe shall be cleaned and inspected for offsets and obstructions prior to testing.

For pipe 36 inches (900 mm) and less in diameter, a mandrel shall be pulled through the pipe by hand to ensure that maximum allowable deflections have not been exceeded. The mandrel shall be approved by the engineer prior to use. Use of an unapproved mandrel or a mandrel altered or modified after approval will invalidate the test. If the mandrel fails to pass, the pipe is overdeflected.

Unless otherwise permitted, overdeflected pipe shall be uncovered and, if not damaged, reinstalled. Damaged pipe shall not be reinstalled, but shall be removed and replaced with new pipe. Any pipe subjected to any method or process other than removal, which attempts, even successfully, to reduce or cure any overdeflection, shall be removed and replaced with new pipe.

The mandrel shall be a rigid, nonadjustable, odd-numbered legged (minimum 9 legs) mandrel having a length not less than its nominal diameter or 24 inches (600 mm), whichever is less. The minimum diameter at any point shall be 5.0 percent less than the base inside diameter of the pipe being tested. The mandrel shall be fabricated of steel, aluminum or other approved material fitted with pulling rings at each end. The nominal pipe size and outside diameter of the mandrel shall be stamped or engraved on some segment other than a runner. A suitable carrying case shall be furnished.

For pipe larger than 36 inches (900 mm) in diameter, deflection shall be determined by a method approved by the engineer. If a mandrel is selected, the minimum diameter, length, and other requirements shall conform to the above requirements.

Mandrel testing shall be conducted by the contractor in the presence of the engineer. Mandrel testing shall be at no direct pay.

(b) Metal Pipe: If the inside diameter of metal pipe or rise dimension of metal pipe arch deflects more than 5.0 percent from original dimensions, they shall be removed and reinstalled, unless they do not rebound or are damaged. Pipe or pipe arch which are damaged or do not rebound shall be removed and replaced at no direct pay. Measurement of deflection will be made by the engineer away from rerolled ends.

701.10 CLEANING PIPES.

(a) Existing Pipes: Pipes designated to be cleaned shall be cleaned of soil, debris and other materials to the invert of the pipe. Designated pipes shall be cleaned by approved methods that will not damage the pipes. Any damage caused by the contractor's operations shall be satisfactorily repaired at no direct pay.

Removed soil, debris and other materials shall be disposed of in accordance with Subsection 202.02 or as otherwise approved in writing.

(b) Contractor Installed Pipes: Prior to final acceptance, pipes shall be cleaned of all debris and soil to the invert of the pipe at no direct pay.

Removed soil, debris and other materials shall be disposed of in accordance with Subsection 202.02 or as otherwise approved in writing.

701.11 STUBBING AND PLUGGING PIPES. When it is required that pipes be plugged, such plugs shall be constructed of Class R concrete complying with Section 901. Thickness of plug and method of construction shall be as directed.

When new pipes are to be stubbed into new or existing pipes or other structures, the connection shall be made with approved mortar complying with Subsection 702.02.

701.12 MEASUREMENT. Pipe, both new and relaid, will be measured in linear feet (lin m) as follows unless stated otherwise.

(a) Pipe not confined by fixed structures will be measured by the number of joints at the nominal length of each joint.

(b) Pipe confined by fixed structures will be measured along the pipe between the termini of pipe in structure walls.

(c) Pipe confined by a fixed structure on one end and unconfined at the other end will be measured along the pipe from the terminus of pipe in the structure wall to the unconfined end of pipe.

(d) Fabricating of pipe tees, elbows and other fittings will be measured per each fitting. The length of pipe in such fittings will be included in the pay length measurement of pipes of which they form a part.

(e) Excavation required for installation of pipes will not be measured for payment, except as otherwise specified in Subsection 203.14.

(f) Furnishing and placing backfill material below existing ground level for pipes will not be measured for payment. Backfill material needed to complete backfill above natural ground and around pipes that extend above natural ground will be measured and payment will be made under applicable earthwork items. When specified, flowable fill will be measured and paid for in accordance with Section 710.

(g) Plugging and stubbing of pipes will not be measured for payment.

(h) Cleaning existing pipes will be measured by the length of pipe cleaned and accepted.

(i) Concrete collars will be measured per each.

701.13 PAYMENT.

(a) Payment for pipe will be made at the contract unit price per linear foot (lin m) of the types and sizes specified.

When plastic pipe is specified on the plans or elected to be used by the contractor, payment will be made at the contract unit price per linear foot (lin m) of the types and sizes specified in accordance with the payment schedule of Table 701-1.

Table 701-1
Payment Schedule for Plastic Pipe

Percent Payment	Stage of Completeness
75	After placement and backfill has been completed
25	After the pipe has met vertical deflection requirements in accordance with Subsection 701.09(a)

(b) Payment for fabricating pipe tees, elbows and other fittings will be made at the contract unit price per each fitting.

(c) When unstable conditions are encountered, the additional excavation will not be measured for payment; however, the additional materials furnished and placed for the pipe foundation will be measured and paid for as follows:

(1) Granular Materials: Payment will be made under the embankment item. The net section volume of the materials will be multiplied by 3 to determine the pay volume. When the contract does not include a pay item for embankment, payment will be made in accordance with Subsection 104.02.

(2) Bedding Material: Measurement and payment will be made in accordance with Section 726. When the contract does not include a pay item for bedding material, payment will be made in accordance with Subsection 104.02.

(d) Payment for cleaning existing pipes will be made at the contract unit price per linear foot (lin m).

(e) Payment for concrete collars will be made at the contract unit price per each.

Payment will be made under:

Item No.	Pay Item	Pay Unit
701-01	Cross Drain Pipe (Size & Type)	Linear Foot (Lin m)
701-02	Cross Drain Pipe Arch (Size & Type)	Linear Foot (Lin m)
701-03	Storm Drain Pipe (Size & Type)	Linear Foot (Lin m)
701-04	Storm Drain Pipe Arch (Size & Type)	Linear Foot (Lin m)
701-05	Side Drain Pipe (Size)	Linear Foot (Lin m)
701-06	Side Drain Pipe Arch (Size)	Linear Foot (Lin m)
701-07	Yard Drain Pipe (Size)	Linear Foot (Lin m)
701-08	Relaying Pipe	Linear Foot (Lin m)
701-09	Fabricating Pipe Fittings	Each
701-10	Reinforced Concrete Pipe (Extension)	Linear Foot (Lin m)
701-11	Reinforced Concrete Pipe Arch (Extension)	Linear Foot (Lin m)
701-12	Corrugated Metal Pipe (Extension)	Linear Foot (Lin m)
701-13	Corrugated Metal Pipe Arch (Extension)	Linear Foot (Lin m)

701-14	Cleaning Existing Pipes	Linear Foot (Lin m)
701-15	Concrete Collar	Each
701-16	Plastic Pipe (Extension)	Linear Foot (Lin m)

SECTION 704 – GUARD RAIL:

Subsection 704.03 – General Construction Requirements (01/05), Pages 368 and 369.

Add the following to Heading (d), Guard Rail End Treatments.

All end treatments shall bear a label indicating the manufacturer and exact product name of the end treatment along with its assigned NCHRP 350 test level. This label shall resist weathering and shall be permanently affixed to the railing in such a way as to be readily visible.

SECTION 706 – CONCRETE WALKS, DRIVES AND INCIDENTAL PAVING:

All Subsections within Section 706 (04/08), Pages 375 – 377.

Delete Section 706, Concrete Walks, Drives and Incidental Paving and substitute the following.

SECTION 706
CONCRETE WALKS, DRIVES AND INCIDENTAL PAVING

706.01 DESCRIPTION. This work consists of furnishing and constructing portland cement concrete walks, handicapped curb ramps, drives and incidental paving slabs in accordance with these specifications and in conformity with lines, grades and dimensions shown on the plans or established.

706.02 MATERIALS. Materials shall comply with the following Section or Subsections.

Portland Cement Concrete (Class M)	901
Joint Filler	1005.01(c)
Reinforcing Steel	1009.01
Curing Materials	1011.01

706.03 CONSTRUCTION REQUIREMENTS.

(a) Excavation: Excavation shall be made to required depth and width. The top of the subgrade shall be shaped and compacted to a firm, even surface conforming to the section shown on the plans. Unsuitable material shall be removed and disposed of in accordance with Subsection 202.02 and replaced with approved material at no direct pay.

(b) Forms: Forms shall be of wood or metal and shall extend the full depth of concrete. Forms shall be straight, clean and of sufficient strength to resist the pressure of concrete. Bracing of forms shall be such that forms remain in horizontal and vertical alignment until their removal.

Concrete may be placed by slip-form methods. Slip-formed concrete shall be placed with an approved machine designed to spread, vibrate, consolidate and finish concrete in one pass of the machine in such manner that minimum hand finishing is necessary. Sliding forms shall be

rigidly held together to prevent spreading of forms. After the passing of the side forms there shall be no noticeable slumping of concrete.

(c) Subgrade: The subgrade shall be thoroughly moistened immediately prior to placing concrete.

(d) Placing and Finishing: Concrete shall be placed on the subgrade, struck off to required thickness and tamped sufficiently to bring the mortar to the surface. The surface shall be finished with a wood float or steel trowel followed by brushing to a slightly rough finish. Joints and edges shall be rounded with an edging tool having a 1/4-inch (6 mm) radius.

(e) Joints:

(1) Expansion Joints: Expansion joints shall be filled with 1/2 inch (13 mm) thick preformed expansion joint filler. Expansion joints shall be installed at maximum 100-foot (30 m) intervals, and between intersecting paving and any fixed structure such as a building, bridge or curbing, and between intersecting paving and the handicapped curb ramps. Expansion joint material shall extend for the full width and depth of paving.

(2) Weakened Plane: Weakened planes shall be formed by a jointing tool or other acceptable means. Weakened planes shall extend into concrete for at least 1/4 of the depth and shall be approximately 1/8 inch (3 mm) wide.

a. Walks: Spacing of weakened planes for walks shall be equal to the width of walk.

b. Drives: A longitudinal weakened plane shall be formed along the centerline of drives more than 16 feet (5 m) wide, and transverse weakened planes shall be formed at not more than 16-foot (5 m) intervals.

c. Incidental Paving: Weakened planes for incidental paving shall be formed at intervals not exceeding 30 times the thickness of the concrete in length or width. Incidental paving poured adjacent to jointed concrete shall be jointed to match existing joints, with intermediate joints formed as necessary not to exceed the maximum joint spacing.

(3) Construction Joints: Construction joints shall be formed around manholes, utility poles, etc., extending into paving and 1/4 inch (6 mm) thick preformed expansion joint filler shall be installed in these joints.

(4) Tie-ins: Tie-ins of existing concrete shall be made by full depth sawing at no direct pay.

(f) Curing: Concrete shall be cured in accordance with Subsection 601.10.

(g) Detectable Warning Surface for Handicap Ramps and At-Grade Sidewalk Intersections: Sidewalks, when intersecting with roadways, shall be equipped with a detectable warning surface system consisting of raised truncated domes as a transition between the sidewalk and the street as required by the Americans with Disabilities Act, 28 CFR Part 36, ADA Standards for Accessible Design.

Detectable warnings (truncated domes) shall be installed on the ramp surface over the full width of the ramp throat for a distance of 24 inches (600 mm) in the direction of travel from the back of the curb. Detectable warnings (truncated domes) shall also be installed on at-grade sidewalks intersecting with roadways for a distance of 36 inches (900 mm) in the direction of travel from the end of the sidewalk. Truncated domes shall be laid out on a square grid in order to allow enough space for wheelchairs to roll between the domes.

Light reflectance of the truncated domes and the underlying surface must meet the 70 percent contrast requirement of ADAAG.

706.04 MEASUREMENT. Quantities of concrete walks, drives and incidental paving slabs for payment will be the design quantities as specified on the plans and adjustments thereto. Design quantities will be adjusted if the engineer makes changes to adjust to field conditions, if design errors are proven or if design changes are made. Design areas are based on the horizontal dimensions shown on the plans. Excavation, backfill, reinforcing steel and joint materials will not be measured for payment.

Handicapped curb ramps, including the detectable surface warning system, will be measured per each.

Detectable surface warning systems for at-grade sidewalk intersection will not be measured for payment.

706.05 PAYMENT. Payment for concrete walks, drives and incidental paving will be made on a lot basis at the contract unit price per square yard (sq m), adjusted in accordance with the following provisions. Payment for each lot will be made in accordance with Table 901-6. Size, sampling, and testing of each concrete lot shall be in accordance with the Materials Sampling Manual.

Payment for handicapped curb ramps, including the detectable surface warning system, will be made by each and shall include, but not limited to, curb transitions, detectable warning system, gutter, landing and base.

Payment will be made under:

Item No.	Pay Item	Pay Unit
706-01	Concrete Walk (inch (mm) Thick)	Square Yard (Sq m)
706-02	Concrete Drive (inch (mm) Thick)	Square Yard (Sq m)
706-03	Incidental Concrete Paving (inch (mm) Thick	Square Yard (Sq m)
706-04	Handicapped Curb Ramps	Each

SECTION 713 – TEMPORARY TRAFFIC CONTROL:

Subsection 713.06 – Pavement Markings (08/06), Pages 400 – 403.

Delete Table 713-1, Temporary Pavement Markings and substitute the following.

Table 713-1
Temporary Pavement Markings1,2

		Two-lane Highways	Undivided Multilane Highways	Divided Multilane Highways
SHORT TERM	ADT<1500; or ADT>1500 and time<3 days	Lane lines 4-foot (1.2 m) tape on 40-foot (12 m) centers; with "Do Not Pass" and "Pass With Care" signs as required		
	ADT>1500; Time>3 days and<2 weeks	Lane lines 4-foot (1.2-m) tape on 40-foot (12-m) centers with no passing zone markings		
	All ADT's with time <2 weeks		Lane lines 4-foot (1.2m) tape on 40-foot (12 m) centers; double yellow centerline	Lane lines 4-foot (1.2 m) tape on 40-foot (12 m) centers
LONG TERM	All ADT's with time >2 weeks	Standard lane lines, no-passing zone markings, legends and symbols and when pavement width is 22 feet (6.7 m) or greater, edge lines	Standard lane lines, centerlines, edge lines, and legends and symbols	Standard lane lines, centerlines, edge lines, and legends and symbols.

1No-passing zones shall be delineated as indicated whenever a project is open to traffic.
2On all Asphaltic Surface Treatments that are open to traffic and used as a final wearing course or as an interlayer, temporary pavement markings (tabs) on 20-foot (6 m) centers shall be used, in lieu of the 4-foot (1.2 m) tape, on 40-foot (12 m) centers.

SECTION 729 – TRAFFIC SIGNS AND DEVICES:
Subsection 729.02 – Materials (04/08), Pages 456 and 457.

Delete the contents of Heading (a), Sign and Marker Sheeting, and substitute the following.

(a) Sign and Marker Sheeting: Sheeting material for sign panels, delineators, barricades and other markers shall comply with Section 1015. All permanent signs shall meet the requirements of ASTM D 4956, Type X.

Subsection 729.04, Fabrication of Sign Panels and Markers (04/08), Pages 458 – 460.

Delete the third paragraph of Heading (c), Sheeting Application and substitute the following.

ASTM D 4956 Type X reflective sheeting shall be applied with an orientation determined by the engineer to obtain the optimum entrance angle performance. Fabricated vertical splices in ASTM D 4956 Type X reflective sheeting will be allowed only when the horizontal dimension of the sign face or attached shield is in excess of the maximum manufactured width of the sheeting. Fabricated vertical splices in ASTM D 4956 Type X reflective sheeting will also be allowed when the specified orientation will create excessive sheeting waste.

SECTION 804 – DRIVEN PILES:

Subsection 804.08 – Construction Requirements (04/07), Pages548 – 554.

Delete the first sentence of Heading (a), Preboring and substitute the following.

Preboring by augering, wet-rotary drilling, or other methods used to facilitate pile driving will not be permitted unless specified in the plans or allowed by the engineer.

Delete the first sentence of Heading (b), Jetting and substitute the following.

Jetting will not be permitted unless allowed in the plans or allowed by the engineer.

SECTION 901 – PORTLAND CEMENT CONCRETE:

Subsection 901.06 – Quality Control of Concrete (08/06), Pages 726 – 731.

Add the following to the contents of Heading (b), Quality Control Tests.

The contractor shall be responsible for monitoring the components (cement, mineral and chemical admixtures, aggregates) in their mix to protect against any changes due to component variations. As component shipments arrive, the contractor shall verify slump, air content and set time by testing at ambient temperatures. The contractor shall make adjustments to the mix design to rectify any changes which would adversely affect constructability, concrete placement or the specifications. The contractor shall submit test results to the Department for review each day of paving. Testing to validate component consistency will be documented on the control logs. Conformance or variation in mix parameters (workability, set times, air content, etc.) shall be noted on the control logs. The contractor shall provide a copy of the proposed testing plan to the engineer for record. Acceptance of the plan does not relieve the contractor's responsibility for consistency.

Subsection 901.08 – Composition of Concrete (12/05), Pages 732 – 734.

Add the following to Heading (a).

The blended cement containing up to 50 percent of grade 100 or grade 120 ground granulated blast-furnace slag must be in compliance with Subsection 1001.04 for portland blast-furnace slag cement.

SECTION 1001 – HYDRAULIC CEMENT:

Subsection 1001.01 – Portland Cement (09/07). Page 749.

Delete the contents of this subsection and substitute the following.

1001.01 PORTLAND CEMENT. Portland cement shall be from an approved source listed in QPL 7 and shall comply with AASHTO M 85.

Alkali content calculated as sodium oxide equivalent shall not exceed 0.60 percent by weight for all types of cement.

SECTION 1003 – AGGREGATES:

Subsection 1003.02 – Aggregates for Portland Cement Concrete and Mortar (07/07), Pages 763 – 766.

Delete the contents of Heading (c), Aggregates for Types B and D Pavements, and substitute the following.

(c) Aggregates for Types B and D Pavements: For the combined aggregates for the proposed portland cement concrete pavement mix, the percent retained based on the dry weight (mass) of the total aggregates shall meet the requirements of Table 1003-1A for the type of pavement specified in the plans. Additionally, the sum of the percents retained on any two adjacent sieves so designated in the table shall be at least 12 percent of the total combined aggregates. The maximum amounts by weight (mass) of deleterious materials for the total aggregate shall be the same as shown in Subsection 1003.02(b).

Table 1003-1A
Aggregates for Types B and D Pavements

U.S. Sieve	Metric Sieve	Percent Retained of Total Combined Aggregates	
		Pavement Type	
		Type B	Type D
2 1/2 inch	63 mm	0	0
2 inch	50 mm	0	0-20
1 1/2 inch	37.5 mm	0-20	0-20
1 inch	25.0 mm	0-20	5-20
3/4 inch	19.0 mm	5-20	5-20
1/2 inch	12.5 mm	5-20	5-20
3/8 inch	9.5 mm	5-20	5-20
No. 4	4.75 mm	5-20	5-20
No. 8	2.36 mm	5-20	5-20
No. 16	1.18 mm	5-20	5-20
No. 30	600 µm	5-20	5-20
No. 50	300 µm	0-20	0-20
No. 100	150 µm	0-20	0-20
No. 200	75 µm	0-5	0-5
Note: For the sieves in the shaded areas, the sum of any two adjacent sieves shall be a minimum of 12 percent of the total combined aggregates.			

Each type of aggregate to be used in the proposed mixture shall be sampled and tested individually. The percent of total combined aggregates retained shall be determined mathematically based on the proportions of the combined aggregate blend. All gradation calculations shall be based on percent of dry weight (mass).

SECTION 1005 – JOINT MATERIALS FOR PAVEMENTS AND STRUCTURES:
Subsection 1005.04 – Combination Joint Former/Sealer (11/05), Pages 782 and 783.

Delete Heading (a) and substitute the following.

(a) Description: This joint former/sealer is intended for use in simultaneously forming and sealing a weakened plane in portland cement concrete pavements.

The material shall consist of an elastomeric strip permanently bonded either mechanically or chemically at the top of each of two rigid plastic side frames and covered with a removable plastic top cap. Side frames shall be of such configuration that when the sealer is inserted into plastic concrete and vibrated, a permanent bond forms between side frames and concrete.

Delete Heading (b)(1) and substitute the following.

(1) Elastomer: The elastomer strip portion of the material shall be manufactured from vulcanized elastomeric compound using polymerized chloroprene or thermoplastic vulcanizate as the base polymer, and shall comply with the following requirements:

Property	ASTM Test Method	Requirements	
		Polymerized Chloroprene	Thermoplastic Vulcanizate
Tensile Strength, kPa, Min.	D 412	12,400	7,400
Elongation at Break, % Min.	D 412	200	400
Hardness, Shore A	D 2240	65 ± 10	65 ± 10
Properties after Aging, 70 h @ 100°C	D 573		
Tensile Strength, % Loss, Max.		20	20
Elongation, % loss, Max.		25	25
Hardness, pts. increase, Max.		10	10
Ozone Resistance, 20% strain or bentloop, 300 pphm in air, 70 h @ 40°C	D 1149	no cracks	no cracks
Oil Swell, IRM 903, 70 h @ 100°C, wt change, % Max.	D 471	45	75

Delete Headings (b)(2) and (b)(3) and substitute the following:

(2) Bond of Elastomer to Plastic: The force required to shear the elastomer from the plastic shall be a minimum of 5.0 pounds per linear inch (90 g/mm) of sealer when tested in accordance with DOTD TR 636.

(3) Bond of Plastic to Cement Mortar: This bond will be evaluated and shall meet the following requirements:

The force required to separate the cement mortar from the plastic shall be a minimum of 5.0 pounds per linear inch (90 g/mm) of sealer when tested in accordance with DOTD TR 636.

SECTION 1006 – CONCRETE AND PLASTIC PIPE:

Subsection 1006.09 – Plastic Yard Drain Pipe (06/07), Page 789.

Delete the contents of Subheading (a)(3), Ribbed Polyvinyl Chloride Pipe (RPVCP) and substitute the following.

Ribbed Polyvinyl Chloride Pipe (RPVCP): Ribbed Polyvinyl Chloride Pipe shall comply with ASTM F 794, Series 46 or ASTM F 949 (46 psi).

SECTION 1013 – METALS:

Subsection 1013.09 – Steel Piles (08/06) Page 822.

Delete the title and references to "Steel Piles" in this subsection and substitute "Steel H Piles".

SECTION 1015 – SIGNS AND PAVEMENT MARKINGS:

Subsection 1015.04 – Sign Panels (05/07), Pages 832 and 833.

Delete the contents of Heading (a), Permanent Sign Panels and substitute the following.

(a) Permanent Sign Panels: Flat panels shall be aluminum sheets or plates complying with ASTM B 209, Alloy 6061-T6 or Alloy 5052-H38. Extruded aluminum panels shall comply with ASTM B 221 (ASTM B 221M), Alloy 6063-T6 and after fabrication, have a flatness equal to or less than 0.031 inch per foot of length and 0.004 inch per inch of width.

Subsection 1015.05 - Reflective Sheeting (04/08), Pages 833 – 838.

Delete the contents of this subsection and substitute the following.

1015.05 REFLECTIVE SHEETING.

(a) Permanent and Temporary Standard Sheeting: Reflective sheeting shall be one of the following standard types as specified on the plans and complying with ASTM D 4956 except as modified herein. Permanent warning, regulatory, guide and supplemental guide sign sheeting shall meet the requirements of ASTM D 4956 Type X. Reflective sheeting for temporary signs and devices shall meet the requirements of ASTM D 4956 Type III except as noted in Subsection 1015.05(f). Reflective sheeting shall be an approved product listed in QPL 13.

Type III - A high-intensity retroreflective sheeting that is typically encapsulated glass-bead retroreflective material.

Type VI - An elastomeric high-intensity retroreflective sheeting without adhesive. This sheeting is typically a vinyl microprismatic retroreflective material.

Type X - A super high-intensity retroreflective sheeting having highest retroreflectivity characteristics at medium distances. This sheeting is typically an unmetalized microprismatic retroreflective element material.

(b) Fluorescent Pink Retroreflective Sheeting: Signs for temporary control of traffic through incident management areas shall be Type VI fluorescent pink retroreflective sheeting and shall comply with the MUTCD. Temporary traffic control signs for incident management shall be placed to notify motorists of upcoming incidents on the roadway, and shall be removed from public view once the incident has been managed. Physical properties shall comply with ASTM D 4956. Photometric properties shall be as follows.

(1) Retroreflectivity: Minimum Coefficients of Retroreflection shall be as specified in Table 1015-1.

Table 1015-1
Coefficients of Retroreflection for Fluorescent Pink Sheeting[1]

Observation Angle, degrees	Entrance Angle, degrees	Fluorescent Pink
0.2	-4	100
0.2	+30	40
0.5	-4	40
0.5	+30	15

[1]Minimum Coefficient of Retroreflection (R_A) (cd $lx^{-1}m^{-2}$)

(2) Color and Daytime Luminance: Color Chromaticity Coordinates and Daytime Luminance Factors shall be as specified in Table 1015-2.

Table 1015-2
Fluorescent Pink Color Specifications Limits (Daytime)

Chromaticity Coordinates (corner points) [1]								Luminance Factor, min.
1		2		3		4		Y%
x	y	x	y	x	y	x	y	25
0.450	0.270	0.590	0.350	0.644	0.290	0.536	0.230	

[1]The four pairs of chromaticity coordinates measured with CIE 2° Standard Observer and 45/0 (0/45) geometry and CIE D65 Standard Illuminant.

(c) Adhesive Classes: The adhesive required for retroreflective sheeting shall be Class 1 (pressure sensitive) as specified in ASTM D 4956.

(d) Accelerated Weathering: Reflective sheeting, when processed, applied and cleaned in accordance with the manufacturer's recommendations shall perform in accordance with the accelerated weathering standards in Table 1015-3.

Table 1015-3
Accelerated Weathering Standards[1]

Type	Retroreflectivity[2]				Colorfastness[3]	
	Orange/ Fluorescent Orange		All colors, except orange/Fluorescent Orange		Orange/ Fluorescent Orange	All colors, except orange/Fluorescent Orange
III	1 year	80[4]	3 years	80[4]	1 year	3 years
III (for drums)	1 year	80[4]	1 year	80[4]	1 year	1 year
VI	1/2 year	50[5]	1/2 year	50[5]	1/2 year	1/2 year
X	1 year	80[6]	3 years	80[6]	1 year	3 years

[1]At an angle of 45° from the horizontal and facing south in accordance with ASTM G 7 at an approved test facility in Louisiana or South Florida.
[2]Percent retained retroreflectivity of referenced table after the outdoor test exposure time specified.
[3]Colors shall conform to the color specification limits of ASTM D 4956 after the outdoor test exposure time specified.
[4]ASTM D 4956, Table 8.
[5]ASTM D 4956, Table 13.
[6]ASTM D 4956, Table 4.

(e) Expected Sign Life Data and Performance: The sheeting manufacturer shall supply expected retroreflectivity service life curves for each of the following sign sheeting colors: white, green, blue, brown, red, and yellow. The service life curves shall be plots of the 95 percent expected life plotted on an x-y graph with life years on the x-axis and retroreflectivity on the y-axis. The expected life shall account for worst case installations, equivalent to an installation in South Louisiana with the sign facing to the South. The sheeting manufacturer shall also supply a table of expected life values taken from the service life curves for Revision Number 2 to the 2003 Edition of the MUTCD minimum reflectivity requirements published in the Federal Register on December 21, 2007. Reflective sheeting for signs, when processed, applied and cleaned in accordance with the manufacturer's recommendations shall perform outdoors in accordance with the performance standards in Table 1015-4.

Table 1015-4
Reflective Sheeting Performance Standards

Type	Retroreflectivity[1] -- Durability[2]				Colorfastness[3]
	Orange/ Fluorescent Orange		All colors, except orange/Fluorescent Orange		
III	3 years	80[4]	10 years	80[4]	3 years
X	3 years	80[5]	7years	80[5]	3 years

[1]Percent retained retroreflectivity of referenced table after installation and the field exposure time specified.
[2]All sheeting shall maintain its structural integrity, adhesion and functionality after installation and the field exposure time specified.
[3]All colors shall conform to the color specification limits of ASTM D 4956 after installation and the field exposure time specified.
[4]ASTM D4956, Table 8.
[5]ASTM D 4956, Table 4.

(f) Temporary Signs, Barricades, Channelizing Devices, Drums and Cones: Reflective sheeting for temporary signs, barricades and channelizing devices, shall meet the requirements of ASTM D 4956, Type III except that temporary warning construction signs used on the mainline of freeways and expressways shall be fluorescent orange and meet the requirements of ASTM D 4956, Type X.

Reflective sheeting for vertical panels shall meet the requirements of ASTM D 4956, Type III.

Reflective sheeting for drums shall be a minimum of 6 inches (150 mm) wide and shall meet the requirements of ASTM D 4956, Type III, and the Supplementary Requirement S2 for Reboundable Sheeting as specified in ASTM D 4956. Reflective sheeting for traffic cone collars shall meet the requirements of ASTM D 4956, Type III or Type VI.

(g) Sheeting Guaranty. The contractor shall provide the Department with a guaranty from the sheeting manufacturer stating that if the retroreflective sheeting fails to comply with the performance requirements of this subsection, the sheeting manufacturer shall do the following:

Table 1015-5
Manufacturer's Guaranty-Reflective Sheeting

Type	Manufacturer shall restore the sign face in its field location to its original effectiveness at no cost to the Department if failure occurs during the time period[1] as specified below		Manufacturer shall replace the sheeting required to restore the sign face to its original effectiveness at no cost to the Department if failure occurs during the time period[1] as specified below
	Orange/Fluorescent Orange	All colors, except orange/Fluorescent Orange	All colors, except orange/Fluorescent Orange
III	<3 years	<7 years	7-10 years
X	<3 years	<5 years	5-7 years

[1] From the date of sign installation.

Replacement sheeting for sign faces, material, and labor shall carry the unexpired guaranty of the sheeting for which it replaces.

The sign fabricator shall be responsible for dating all signs with the month and year of fabrication at the time of sign fabrication. This date shall constitute the start of the guaranty obligation period.

Subsection 1015.11 - Preformed Plastic Pavement Marking Tape (06/07), Pages 842 – 844.

Delete the contents of this subsection and substitute the following.

1015.11 PREFORMED PLASTIC PAVEMENT MARKING TAPE.

(a) General: Preformed plastic pavement marking tape shall be approved products listed on QPL 64 and shall comply with ASTM D4505 Retroreflectivity Level I or Level II, or DOTD Intersection Grade (as specified below), except as modified herein. The marking tape shall be Class 2 or 3. The type and color shall be in accordance with the plans and the MUTCD.

(b) Thickness: All preformed plastic pavement marking tape shall have a minimum overall thickness of 0.060 inches (1.5 mm) when tested without the adhesive.

(c) Friction Resistance: The surface of the Retroreflectivity Level II preformed plastic pavement marking tape shall provide a minimum frictional resistance value of 35 British Polish Number (BPN) when tested according to ASTM E303. The surface of the Retroreflectivity Level I and DOTD Intersection Grade preformed plastic pavement marking tape shall provide a minimum frictional resistance value of 45 BPN when tested according to ASTM E303. Values for the Retroreflectivity Level I material with a raised surface pattern as defined in ASTM D4505 are calculated by averaging values taken at downweb and at a 45 degrees angle from downweb.

(d) Retroreflective Requirements: The preformed plastic pavement marking tape shall have the minimum initial specific luminance values shown in Table 1015-7 when measured in accordance with ASTM D 4061.

Table 1015-7
Specific Luminance of Preformed Plastic Tape

Type	Observation Angle, degrees	Entrance Angle, degrees	Specific Luminance (mcd/sq m/lx)	
			White	Yellow
Retroreflectivity Level I	1.05	88.76	500	300
DOTD Intersection Grade	1.05	88.76	375	250
Retroreflectivity Level II	1.05	88.76	250	175

(e) Durability Requirements: The DOTD Intersection Grade preformed plastic pavement marking tape shall show no appreciable fading, lifting or shrinkage for a least 12 months after placement when placed in accordance with the manufacturer's recommended procedures on pavement surfaces having a daily traffic count not to exceed 15,000 ADT per lane.

The Retroreflectivity Level I preformed plastic pavement marking tape shall show no appreciable fading, lifting or shrinkage for a least 4 years after placement for longitudinal lines and at least 2 years after placement for symbols and legends.

The Retroreflectivity Level I preformed plastic pavement marking tape shall also retain the following reflectance values for the time period detailed in Table 1015-8.

Table 1015-8
Retained Specific Luminance for Retroreflectivity Level I
Preformed Plastic Pavement Marking Tape

Time	Observation Angle, degrees	Entrance Angle, degrees	Specific Luminance (mcd/sq m/lx)	
			White	Yellow
1 year	1.05	88.76	400	240
4 years (2 years for symbols and legend)	1.05	88.76	100	100

(f) Plastic Pavement Marking Tape Guaranty (DOTD Intersection Grade and Retroreflectivity Level I): If the plastic pavement marking tape fails to comply with the performance and durability requirements of this subsection within 12 months for DOTD Intersection Grade and 4 years for Retroreflectivity Level I, the manufacturer shall replace the plastic pavement marking material at no cost to the Department.

SECTION 1020 – TRAFFIC SIGNALS:

Subsection 1020.01 – Traffic Signal Heads (06/07), Pages 873 – 884.

Delete the contents of Heading (a), General Requirements and substitute the following.

(a) General Requirements: Traffic signal sections, beacon sections and pedestrian signal sections shall be of the adjustable type. Materials and construction of each section shall be the same.

Signals shall be constructed for either 8 or 12-inch (200 mm or 300 mm) lens in accordance with the plans. Signal sections shall have three to five sections per face and beacon sections have only one section per face. Signal sections and associated brackets shall be finished inside and out with two coats of high grade dark olive green enamel, color number 14056 according to Federal Standard No. 595b with each coat independently baked. Visors shall be coated green on the outside and black on the inside. Edges shall be deburred and smooth with no sharp edges.

Subsection 1020.04 – Poles for Traffic Signal Systems (06/07), Pages 890 – 894.

Delete the sixth paragraph of Heading (a), Pedestal Support Signal Poles, and substitute the following.

Pedestals shall be finished with at least one coat of rustproofing primer, applied to a clean surface and one coat of dark olive green enamel, color number 14056 according to Federal Standard No. 595b.

LOUISIANA
DEPARTMENT OF TRANSPORTATION AND DEVELOPMENT
SUPPLEMENTAL SPECIFICATIONS

FEMALE AND MINORITY PARTICIPATION IN CONSTRUCTION

The following notice shall be included in, and shall be a part of, all solicitations for offers and bids on all federal and federally assisted construction contracts or subcontracts in excess of $10,000 to be performed in geographical areas designated by the director of OFCCP. Execution of the contract by the successful bidder and any subsequent subcontracts will be considered the contractor's and subcontractor's commitment to the EEO provisions contained in this notice.

NOTICE OF REQUIREMENT FOR AFFIRMATIVE ACTION TO ENSURE EQUAL EMPLOYMENT OPPORTUNITY (EXECUTIVE ORDER 11246)

1. The Offeror's or Bidder's attention is called to the "Equal Opportunity Clause" and the "Standard Federal Equal Employment Opportunity Construction Contract Specifications" set forth herein.

2. The goals for minority and female participation, expressed in percentage terms for the contractor's aggregate workforce in each trade on all construction work in the covered area, are as follows:

AREA	PARISH OR COUNTY	GOAL (%)
	FEMALE PARTICIPATION	
-	All Covered Areas	6.9
	MINORITY PARTICIPATION (UNDER NEW ORLEANS PLAN)	
-	* See Note Below	20 to 23
	MINORITY PARTICIPATION (NOT UNDER NEW ORLEANS PLAN)	
1	Jefferson LA, Orleans LA, St. Bernard LA, St. Tammany LA	31.0
2	Assumption LA, Lafourche LA, Plaquemines LA, St. Charles LA, St. James LA, St. John the Baptist LA, Tangipahoa LA, Terrebonne LA, Washington LA, Forrest MS, Lamar MS, Marion MS, Pearl River MS, Perry MS, Pike MS, Walthall MS	27.7
3	Ascension LA, East Baton Rouge LA, Livingston LA, West Baton Rouge, LA	26.1
4	Concordia LA, East Feliciana LA, Iberville, LA, Pointe Coupee LA, St. Helena LA, West Feliciana LA, Adams MS, Amite MS, Wilkinson, MS	30.4
5	Lafayette LA	20.6
6	Acadia LA, Evangeline LA, Iberia LA, St. Landry LA, St. Martin LA, St. Mary LA, Vermillion LA	24.1
7	Calcasieu LA	19.3
8	Allen LA, Beauregard LA, Cameron LA, Jefferson Davis LA, Vernon LA	17.8
9	Grant LA, Rapides LA	25.7
10	Avoyelles LA, Bienville LA, Bossier LA, Caddo LA, Claiborne LA, DeSoto LA, Natchitoches LA, Red River LA, Sabine LA, Webster LA, Winn LA	29.3
11	Ouachita LA	22.8
12	Caldwell LA, Catahoula LA, East Carroll LA, Franklin LA, Jackson LA, LaSalle LA, Lincoln LA, Madison LA, Morehouse LA, Richland LA, Tensas LA, Union LA, West Carroll LA,	27.9

*These goals apply only to those contractors signatory to the New Orleans Plan and only with respect to those trades which have unions participating in said Plan. The New Orleans Plan Covered Area is as follows: The parishes of Orleans, Jefferson, St. Bernard, St. Tammany, St. Charles, St. John the Baptist, Plaquemines, Washington, Terrebonne, Tangipahoa (that area east of the Illinois Central Railroad), Livingston (that area southeast of the line from a point off the Livingston and Tangipahoa Parish line adjacent from New Orleans and Baton Rouge), St. James (that area southeast of a line drawn from the Town of Gramercy to the point of intersection of St. James, Lafourche and Assumption Parishes), and Lafourche.

These goals are applicable to all the contractor's construction work (whether or not it is federal or federally assisted) performed in the covered area. If the contractor performs construction work in a geographical area located outside of the covered area, it shall apply the goals established for such geographical area where the work is actually performed. With regard to this second area, the contractor is also subject to the goals for both its federally involved and non-federally involved construction.

The contractor's compliance with the Executive Order and the regulations in 41 CFR 60-4 shall be based on its implementation of the Equal Opportunity Clause, specific affirmative action obligations required by the specifications set forth in 41 CFR 60-4.3(a), and its efforts to meet the goals established for the geographical area where the contract resulting from this solicitation is to be performed. The hours of minority and female employment and training must be substantially uniform throughout the length of the contract, and in each trade, and the contractor shall make good faith effort to employ minorities and women evenly on each of its projects. The transfer of minority or female employees or trainees from contractor to contractor, or from project to project, for the purpose of meeting the contractor's goals shall be a violation of the contract, the Executive Order and the regulations in 41 CFR 60-4. Compliance with the goals will be measured against the total work hours performed.

3. The contractor shall provide written notification to the Regional Administrator of the Office of Federal Contract Compliance Programs (555 Griffin Square Building, Dallas, TX 75202) within 10 working days of award of any construction subcontract in excess of $10,000 at any tier for construction work under the contract. The notification shall list the name, address and telephone number of the subcontractor; employer identification number; estimated dollar amount of the subcontract; estimated starting and completion dates of the subcontract; and geographical area in which the contract is to be performed.

4. As used in this Notice and in the contract, the "covered area" is that area shown in the foregoing table in which the project is located.

The following Standard Federal Equal Employment Opportunity Construction Contract Specifications (Executive Order 11246) shall be included in, and shall be a part of, all solicitations for offers and bids on all federal and federally assisted construction contracts or subcontracts in excess of $10,000. Execution of the contract by the successful bidder and any

subsequent subcontracts will be considered the contractor's and subcontractor's commitment to the EEO provisions contained in these Standard Federal Equal Employment Opportunity Construction Contract Specifications (Executive Order 11246).

STANDARD FEDERAL EQUAL EMPLOYMENT OPPORTUNITY CONSTRUCTION CONTRACT SPECIFICATIONS (EXECUTIVE ORDER 11246)

1. As used in these specifications:
   a. "Covered area" means the geographical area described in the solicitation from which this contract resulted;
   b. "Director" means Director, Office of Federal Contract Compliance Programs, United States Department of Labor, or any person to whom the Director delegates authority;
   c. "Employer identification number" means the Federal Social Security number used on the Employer's Quarterly Federal Tax Return, U. S. Treasury Department Form 941.
   d. "Minority" includes:
      (i) Black (all persons having origins in any of the Black African racial groups not of Hispanic origin);
      (ii) Hispanic (all persons of Mexican, Puerto Rican, Cuban, Central or South American or other Spanish Culture or origin, regardless of race);
      (iii) Asian and Pacific Islander (all persons having origins in any of the original peoples of the Far East, Southeast Asia, the Indian Subcontinent, or the Pacific Islands); and
      (iv) American Indian or Alaskan Native (all persons having origins in any of the original peoples of North America and maintaining identifiable tribal affiliations through membership and participation or community identification).

2. If the contractor, or any subcontractor at any tier, subcontracts a portion of the work involving any construction trade, he shall include in each subcontract in excess of $10,000 the provisions of these specifications and the Notice which contains the applicable goals for minority and female participation.

3. If the contractor is participating (pursuant to 41 CFR 60-4.5) in a Hometown Plan approved by the U.S. Department of Labor in the covered area either individually or through an association, its affirmative action obligations on all work in the Plan area (including goals and timetables) shall be in accordance with that Plan for those trades which have unions participating in the Plan. Contractors must be able to demonstrate their participation in and compliance with the provisions of any such Hometown Plan. Each contractor or subcontractor participating in an approved Plan is required to comply with his obligations under the EEO clause, and to make good faith effort to achieve each goal under the Plan in each trade in which it has employees. The overall good faith performance by other contractor or subcontractors toward a goal in an

approved Plan does not excuse any covered contractor's or subcontractor's failure to take good faith efforts to achieve the Plan goals.

4. The contractor shall implement the specific affirmative action standards provided in paragraphs 7a through 7p of these specifications. The goals set forth in the solicitation from which this contract resulted are expressed as percentages of the total hours of employment and training of minority and female utilization the contractor should reasonably be able to achieve in each construction trade in which it has employees in the covered area. Covered construction contractors performing construction work in geographical areas where they do not have a federal or federally assisted construction contract shall apply the minority and female goals established for the geographical area where the work is being performed. Goals are published periodically in the Federal Register in notice form, and such notices may be obtained from any OFCCP office or from federal procurement contracting officers. The contractor is expected to make substantially uniform progress in meeting its goals in each craft during the period specified.

5. Neither the provisions of any collective bargaining agreement, nor the failure by a union with whom the contractor has a collective bargaining agreement, to refer either minorities or women, shall excuse the contractor's obligations under these specifications, Executive Order 11246, or the regulations promulgated pursuant thereto.

6. In order for the nonworking training hours of apprentices and trainees to be counted in meeting the goals, such apprentices and trainees must be employed by the contractor during the training period, and the contractor must have made a commitment to employ the apprentices and trainees at the completion of their training, subject to the availability of employment opportunities. Trainees must be trained pursuant to training programs approved by the U. S. Department of Labor.

7. The contractor shall take specific affirmative actions to ensure equal employment opportunity. The evaluation of the contractor's compliance with these specifications will be based on his effort to achieve maximum results from its actions. The contractor shall document these efforts fully, and shall implement affirmative action steps at least as extensive as the following:

a. Ensure and maintain a working environment free of harassment, intimidation and coercion at all sites, and in all facilities at which the contractor's employees are assigned to work. The contractor, where possible, will assign 2 or more women to each construction project. The contractor shall ensure that all foremen, superintendents and other on-site supervisory personnel are aware of and carry out the contractor's obligation to maintain such a working environment with specific attention to minority or female individuals working at such sites or in such facilities.
b. Establish and maintain a current list of minority and female recruitment sources, provide written notification to minority and female recruitment sources and to

community organizations when the contractor or its unions have employment opportunities available, and maintain a record of the organizations' responses.

c. Maintain a current file of the names, addresses and telephone numbers of each minority and female off-the-street applicant and minority or female referral from a union, a recruitment source or community organization and of what action was taken with respect to each such individual. If such individual was sent to the union hiring hall for referral and was not referred back to the contractor by the union or, if referred, not employed by the contractor, this shall be documented in the file with the reason therefor, along with whatever additional actions the contractor has taken.

d. Provide immediate written notification to the Director when the union or unions with which the contractor has a collective bargaining agreement has not referred to the contractor a minority person or woman set by the contractor, or when the contractor has other information that the union referral process has impeded the contractor's efforts to meet its obligations.

e. Develop on-the-job training opportunities and/or participate in training programs for the area which include minorities and women, including upgrading programs and apprenticeship and trainee programs relevant to the contractor's employment needs, especially those programs funded or approved by the Department of Labor. The contractor shall provide notice of these programs to the sources compiled under 7b above.

f. Disseminate the contractor's EEO policy by providing notice of the policy to unions and training programs and requesting their cooperation in assisting the contractor in meeting his EEO obligations; by including it in any policy manual and collective bargaining agreement; by publicizing it in the company newspaper, annual report, etc.; by specific review of the policy with all management personnel and with all minority and female employees at least once a year; and by posting the company EEO policy on bulletin boards accessible to all employees at each location where construction work is performed.

g. Review, at least annually, the company's EEO policy and affirmative action obligations under these specifications with all employees having any responsibility for hiring, assignment, layoff, termination or other employment decisions including specific review of these items with on-site supervisory personnel such as superintendent, general foremen, etc., prior to the initiation of construction work at any job site. A written record shall be made and maintained identifying the time and place of these meetings, persons attending, subject matter discussed, and disposition of the subject matter.

h. Disseminate the contractor's EEO policy externally by including it in ny advertising in the news media, including minority and female news media, and providing written notification to and discussing the contractor's EEO policy with other contractors and subcontractors with whom the contractor does or anticipates doing business.

i. Direct its recruitment efforts, both oral and written, to minority, female and community organizations, to schools with minority and female students and to minority and female recruitment and training organizations serving the contractor's recruitment area and employment needs. Not later than 1 month prior to the date for the acceptance of

applications for apprenticeship or other training by any recruitment source, the contractor shall send written notification to organizations such as the above describing the openings, screening procedures and tests to be used in the selection process.

j. Encourage present minority and female employees to recruit other minority persons and women, and where reasonable, provide after school, summer and vacation employment to minority and female youth both on the site and in other areas of a contractor's workforce.

k. Validate all tests and other selection requirements where there is an obligation to do so under 41 CFR 60-3.

l. Conduct, at least annually, an inventory and evaluation of all minority and female personnel for promotional opportunities and encourage these employees to seek or to prepare for, through appropriate training, etc., such opportunities.

m. Ensure that seniority practices, job classifications, work assignments and other personnel practices, do not have a discriminatory effect by continually monitoring all personnel and employment related activities to ensure that the EEO policy and the contractor's obligations under these specifications are being carried out.

n. Ensure that all facilities and company activities are non-segregated except that separate or single-user toilet and necessary changing facilities shall be provided to assure privacy between the sexes.

o. Document and maintain a record of all solicitations of offers for subcontracts from minority and female construction contractors and suppliers, including circulation of solicitations to minority and female contractor associations and other business associations.

p. Conduct a review, at least annually, of all supervisors' adherence to and performance under the contractor's EEO policies and affirmative action obligations.

8. Contractors are encouraged to participate in voluntary associations which assist in fulfilling their affirmative action obligations (7a through p). The efforts of a contractor association, joint contractor-union, contractor-community, or other similar group of which the contractor is a member and participant, may be asserted as fulfilling its obligations under 7a through 7p of these specifications provided that the contractor actively participates in the group, makes every effort to assure that the group has a positive impact on the employment of minorities and women in the industry, ensures that the concrete benefits of the program are reflected in the contractor's minority and female workforce participation, makes a good faith effort to meet his goals and timetables and can provide access to documentation which demonstrates the effectiveness of actions taken on behalf of the contractor. The obligation to comply, however, is the contractor's and failure of such a group to fulfill an obligation shall not be a defense for the contractor's noncompliance.

9. A goal for minorities and a separate goal for women have been established. The contractor, however, is required to provide equal employment opportunity and to take affirmative action for all minority groups, both male and female, and all women, both minority and non-minority. Consequently, the contractor may be in violation of the Executive Order if a group is employed

in a substantially disparate manner (for example, even though the contractor has achieved its goals for women generally, the contractor may be in violation of the Executive Order if a minority group of women in underutilized).

10. The contractor shall not use the goals or affirmative action standards to discriminate against any person because of race, color, religion, sex or national origin.

11. The contractor shall not enter into a subcontract with any person or firm debarred from Government contracts pursuant to Executive Order 11246.

12. The contractor shall carry out such sanctions and penalties for violation of these specifications and of the Equal Opportunity Clause, including suspension, termination and cancellation of existing subcontracts as may be imposed or ordered pursuant to Executive Order 11246, as amended, and its implementing regulations, by the Office of Federal Contract Compliance Programs. Any contractor who fails to carry out such sanctions and penalties shall be in violation of these specifications and Executive Order 11246, as amended.

13. The contractor, in fulfilling his obligations under these specifications, shall implement specific affirmative actions steps, at least as extensive as the standards prescribed in paragraph 7 of these specifications, so as to achieve maximum results from its efforts to ensure equal employment opportunity. If the contractor fails to comply with the requirements of the Executive Order, the implementing regulations or these specifications, the Director shall proceed in accordance with 41 CFR 60-4.8.

14. The contractor shall designate a responsible official to monitor all employment related activity to ensure that the company EEO policy is being carried out, to submit reports relating to the provisions hereof as may be required by the Government and to keep records. Records shall at least include for each employee the name, address, telephone numbers, construction trade, union affiliation if any, employee identification number when assigned, social security number, race, sex, status (e.g., mechanic, apprentice, trainee helper, or laborer), dates of changes in status, hours worked per week in the indicated trade, rate of pay and locations at which the work was performed. Records shall be maintained in an easily understandable and retrievable form; however, to the degree that existing records satisfy this requirement, contractors will not be required to maintain separate records.

15. Nothing herein shall be construed as a limitation on the application of other laws which establish different standards of compliance or on the application of requirements for hiring of local or other area residents (e.g., those under the Pubic Works Employment Act of 1977 and the Community Development Block Grant Program).

16. In addition to the reporting requirements set forth elsewhere in this contract, the contractor and subcontractors holding subcontracts (not including material suppliers) in excess of $10,000

shall submit for every month of July during which work is performed, employment data as contained under Form FHWA-1391 in accordance with instructions included thereon.

LOUISIANA
DEPARTMENT OF TRANSPORTATION AND DEVELOPMENT
SUPPLEMENTAL SPECIFICATIONS

NEW ORLEANS PLAN

Each bidder, contractor or subcontractor (hereinafter called the contractor) must fully comply with these bid conditions as to each construction trade intended to be used on this construction contract and all other construction work (both federal and nonfederal) in New Orleans Plan Area during the performance of this contract or subcontract. The contractor commits to the minority and female employment utilization goals set forth herein and all other requirements, terms and conditions expressed herein by submitting a properly signed bid.

The contractor shall appoint a company executive to assume the responsibility for implementation of the requirements, terms and conditions of these bid conditions.

These specifications implementing the New Orleans Plan for employment of minorities and females have been imposed by the U. S. Department of Labor by order on September 8, 1971, as amended, for all nonexempt federal and federally assisted construction contracts to be awarded in the area of jurisdiction of the Southeast Louisiana Building and Construction Trades Council in the City of New Orleans and Southeast Louisiana. This area consists of the parishes of Orleans, Jefferson, St. Bernard, St. Tammany, St. Charles, St. John the Baptist, Plaquemines, Washington, Terrebonne, Tangipahoa (that area east of the Illinois Central Railroad), Livingston (that area southeast of the line from a point off the Livingston and Tangipahoa Parish line adjacent from New Orleans and Baton Rouge), St. James (that area southeast of a line drawn from the Town of Gramercy to the point of intersection of St. James, Lafourche and Assumption Parishes), and Lafourche.

The provisions of these bid conditions apply to contractors which are party to collective bargaining agreements with labor organizations which together have agreed to the New Orleans Area Construction Program (hereinafter called the New Orleans Plan) for equal opportunity and have jointly made a commitment to goals of minority and female utilization. The New Orleans Plan is a voluntary agreement between (1) Southeast Louisiana Building and Construction Trades Council; (2) contractors and subcontractors who are signatory to the New Orleans Plan; (3) the Urban League of Greater New Orleans and representatives of the minority community; and (4) the City of New Orleans. The New Orleans Plan, together with all implementing agreements that have been and may hereafter be developed pursuant thereto, are incorporated herein by reference.

The requirements set forth herein shall constitute the specific affirmative action requirements for activities under this contract and supplement the equal employment opportunity requirements set forth in the Required Contract Provisions.

The contractor and all subcontractors holding contracts in excess of $10,000 shall comply with the following minimum requirement activities of equal employment opportunity. The contractor shall include these requirements in every subcontract in excess of $10,000 with such modification of language as necessary to make them binding on the subcontractor.

Each contractor and subcontractor shall submit a monthly employment utilization report, Standard Form 257, covering the contractor's entire work force employed on all contracts (both federal and nonfederal) held in the New Orleans Area. In addition, a list of the federal and nonfederal contracts which are covered by the report shall be furnished. The report shall be submitted to the engineer no later than the 10th day following the end of the month being reported. The report shall end on the next to the last Saturday in the month being reported and shall reflect all hours worked between this date and the close out date in the preceding month. Copies of all payrolls and personnel data shall be retained for 3 years after final acceptance of the project. These records and documents, or copies thereof, shall be made available at reasonable times and places for inspection by an authorized representative of the State or Federal Government and shall be submitted upon request with any other compliance information which such representative may require.

In addition to the reporting requirements set forth above, the contractor and the subcontractors holding subcontracts, not including material suppliers, in excess of $10,000 shall submit for every month of July during which work is performed, employment data as contained under Form FHWA-1391, and in accordance with the instructions included thereon.

A contractor may be in compliance with these bid conditions by its participation in the New Orleans Plan and applicable provisions contained in the "Notice of Requirement for Affirmative Action to Ensure Equal Employment Opportunity (Executive Order 11246)" and Standard Federal Equal Employment Opportunity Construction Contract Specifications (Executive Order 11246).

LOUISIANA
DEPARTMENT OF TRANSPORTATION AND DEVELOPMENT

REQUIRED CONTRACT PROVISIONS
FEDERAL-AID CONSTRUCTION CONTRACTS

		Page
I.	General	1
II.	Nondiscrimination	1
III.	Nonsegregated Facilities	3
IV.	Payment of Predetermined Minimum Wage	3
V.	Statements and Payrolls	6
VI.	Record of Materials, Supplies, and Labor	7
VII.	Subletting or Assigning the Contract	7
VIII.	Safety: Accident Prevention	7
IX.	False Statements Concerning Highway Projects	7
X.	Implementation of Clean Air Act and Federal Water Pollution Control Act	8
XI.	Certification Regarding Debarment, Suspension, Ineligibility, and Voluntary Exclusion	8
XII.	Certification Regarding Use of Contract Funds for Lobbying	10

ATTACHMENTS

A. Employment Preference for Appalachian Contracts (included in Appalachian contracts only)

I. GENERAL

1. These contract provisions shall apply to all work performed on the contract by the contractor's own organization and with the assistance of workers under the contractor's immediate superintendence and to all work performed on the contract by piecework, station work, or by subcontract.

2. Except as otherwise provided for in each section, the contractor shall insert in each subcontract all of the stipulations contained in these Required Contract Provisions, and further require their inclusion in any lower tier subcontract or purchase order that may in turn be made. The Required Contract Provisions shall not be incorporated by reference in any case. The prime contractor shall be responsible for compliance by any subcontractor or lower tier subcontractor with these Required Contract Provisions.

3. A breach of any of the stipulations contained in these Required Contract Provisions shall be sufficient grounds for termination of the contract.

4. A breach of the following clauses of the Required Contract Provisions may also be grounds for debarment as provided in 29 CFR 5.12:

Section I, paragraph 2;
Section IV, paragraphs 1, 2, 3, 4, and 7;
Section V, paragraphs 1 and 2a through 2g.

5. Disputes arising out of the labor standards provisions of Section IV (except paragraph 5) and Section V of these Required Contract Provisions shall not be subject to the general disputes clause of this contract. Such disputes shall be resolved in accordance with the procedures of the U.S. Department of Labor (DOL) as set forth in 29 CFR 5, 6, and 7. Disputes within the meaning of this clause include disputes between the contractor (or any of its subcontractors) and the contracting agency, the DOL, or the contractor's employees or their representatives.

6. **Selection of Labor:** During the performance of this contract, the contractor shall not:

a. discriminate against labor from any other State, possession, or territory of the United States (except for employment preference for Appalachian contracts, when applicable, as specified in Attachment A), or

b. employ convict labor for any purpose within the limits of the project unless it is labor performed by convicts who are on parole, supervised release, or probation.

II. NONDISCRIMINATION

(Applicable to all Federal-aid construction contracts and to all related subcontracts of $10,000 or more.)

1. **Equal Employment Opportunity:** Equal employment opportunity (EEO) requirements not to discriminate and to take affirmative action to assure equal opportunity as set forth under laws, executive orders, rules, regulations (28 CFR 35, 29 CFR 1630 and 41 CFR 60) and orders of the Secretary of Labor as modified by the provisions prescribed herein, and imposed pursuant to 23 U.S.C. 140 shall constitute the EEO and specific affirmative action standards for the contractor's project activities under this contract. The Equal Opportunity Construction Contract Specifications set forth under 41 CFR 60-4.3 and the provisions of the American Disabilities Act of 1990 (42 U.S.C. 12101 et seq.) set forth under 28 CFR 35 and 29 CFR 1630 are incorporated by reference in this contract. In the execution of this contract, the contractor agrees to comply with the following minimum specific requirement activities of EEO:

a. The contractor will work with the State highway agency (SHA) and the Federal Government in carrying out EEO obligations and in their review of his/her activities under the contract.

b. The contractor will accept as his operating policy the following statement:

"It is the policy of this Company to assure that applicants are employed, and that employees are treated during employment, without regard to their race, religion, sex, color, national origin, age or disability. Such action shall include: employment, upgrading, demotion, or transfer; recruitment or recruitment advertising; layoff or termination; rates of pay or other forms of compensation; and selection for training, including apprenticeship, preapprenticeship, and/or on-the-job training."

2. **EEO Officer:** The contractor will designate and make known to the SHA contracting officers an EEO Officer who will have the responsibility for and must be capable of effectively administering and promoting an active contractor program of EEO and who must be assigned adequate authority and responsibility to do so.

3. **Dissemination of Policy:** All members of the contractor's staff who are authorized to hire, supervise, promote, and discharge employees, or who recommend such action, or who are substantially involved in such action, will be made fully cognizant of, and will

implement, the contractor's EEO policy and contractual responsibilities to provide EEO in each grade and classification of employment. To ensure that the above agreement will be met, the following actions will be taken as a minimum:

a. Periodic meetings of supervisory and personnel office employees will be conducted before the start of work and then not less often than once every six months, at which time the contractor's EEO policy and its implementation will be reviewed and explained. The meetings will be conducted by the EEO Officer.

b. All new supervisory or personnel office employees will be given a thorough indoctrination by the EEO Officer, covering all major aspects of the contractor's EEO obligations within thirty days following their reporting for duty with the contractor.

c. All personnel who are engaged in direct recruitment for the project will be instructed by the EEO Officer in the contractor's procedures for locating and hiring minority group employees.

d. Notices and posters setting forth the contractor's EEO policy will be placed in areas readily accessible to employees, applicants for employment and potential employees.

e. The contractor's EEO policy and the procedures to implement such policy will be brought to the attention of employees by means of meetings, employee handbooks, or other appropriate means.

4. **Recruitment:** When advertising for employees, the contractor will include in all advertisements for employees the notation: "An Equal Opportunity Employer." All such advertisements will be placed in publications having a large circulation among minority groups in the area from which the project work force would normally be derived.

a. The contractor will, unless precluded by a valid bargaining agreement, conduct systematic and direct recruitment through public and private employee referral sources likely to yield qualified minority group applicants. To meet this requirement, the contractor will identify sources of potential minority group employees, and establish with such identified sources procedures whereby minority group applicants may be referred to the contractor for employment consideration.

b. In the event the contractor has a valid bargaining agreement providing for exclusive hiring hall referrals, he is expected to observe the provisions of that agreement to the extent that the system permits the contractor's compliance with EEO contract provisions. (The DOL has held that where implementation of such agreements have the effect of discriminating against minorities or women, or obligates the contractor to do the same, such implementation violates Executive Order 11246, as amended.)

c. The contractor will encourage his present employees to refer minority group applicants for employment. Information and procedures with regard to referring minority group applicants will be discussed with employees.

5. **Personnel Actions:** Wages, working conditions, and employee benefits shall be established and administered, and personnel actions of every type, including hiring, upgrading, promotion, transfer, demotion, layoff, and termination, shall be taken without regard to race, color, religion, sex, national origin, age or disability. The following procedures shall be followed:

a. The contractor will conduct periodic inspections of project sites to insure that working conditions and employee facilities do not indicate discriminatory treatment of project site personnel.

b. The contractor will periodically evaluate the spread of wages paid within each classification to determine any evidence of discriminatory wage practices.

c. The contractor will periodically review selected personnel actions in depth to determine whether there is evidence of discrimination. Where evidence is found, the contractor will promptly take corrective action. If the review indicates that the discrimination may extend beyond the actions reviewed, such corrective action shall include all affected persons.

d. The contractor will promptly investigate all complaints of alleged discrimination made to the contractor in connection with his obligations under this contract, will attempt to resolve such complaints, and will take appropriate corrective action within a reasonable time. If the investigation indicates that the discrimination may affect persons other than the complainant, such corrective action shall include such other persons. Upon completion of each investigation, the contractor will inform every complainant of all of his avenues of appeal.

6. **Training and Promotion:**

a. The contractor will assist in locating, qualifying, and increasing the skills of minority group and women employees, and applicants for employment.

b. Consistent with the contractor's work force requirements and as permissible under Federal and State regulations, the contractor shall make full use of training programs, i.e., apprenticeship, and on-the-job training programs for the geographical area of contract performance. Where feasible, 25 percent of apprentices or trainees in each occupation shall be in their first year of apprenticeship or training. In the event a special provision for training is provided under this contract, this subparagraph will be superseded as indicated in the special provision.

c. The contractor will advise employees and applicants for employment of available training programs and entrance requirements for each.

d. The contractor will periodically review the training and promotion potential of minority group and women employees and will encourage eligible employees to apply for such training and promotion.

7. **Unions:** If the contractor relies in whole or in part upon unions as a source of employees, the contractor will use his/her best efforts to obtain the cooperation of such unions to increase opportunities for minority groups and women within the unions, and to effect referrals by such unions of minority and female employees. Actions by the contractor either directly or through a contractor's association acting as agent will include the procedures set forth below:

a. The contractor will use best efforts to develop, in cooperation with the unions, joint training programs aimed toward qualifying more minority group members and women for membership in the unions and increasing the skills of minority group employees and women so that they may qualify for higher paying employment.

b. The contractor will use best efforts to incorporate an EEO clause into each union agreement to the end that such union will be contractually bound to refer applicants without regard to their race, color, religion, sex, national origin, age or disability.

c. The contractor is to obtain information as to the referral practices and policies of the labor union except that to the extent such information is within the exclusive possession of the labor union and such labor union refuses to furnish such information to the contractor, the contractor shall so certify to the SHA and shall set forth what efforts have been made to obtain such information.

d. In the event the union is unable to provide the contractor with a reasonable flow of minority and women referrals within the time limit set forth in the collective bargaining agreement, the contractor will, through independent recruitment efforts, fill the employment vacancies without regard to race, color, religion, sex, national origin, age or disability; making full efforts to obtain qualified and/or qualifiable minority group persons and women. (The DOL has held that it shall be no excuse that the union with which the contractor has a collective bargaining agreement providing for exclusive referral failed to refer minority employees.) In the event the union referral practice prevents the contractor from meeting the obligations pursuant to Executive Order 11246, as amended, and these special provisions, such contractor shall immediately notify the SHA.

8. **Selection of Subcontractors, Procurement of Materials and Leasing of Equipment:** The contractor shall not discriminate on the grounds of race, color, religion, sex, national origin, age or disability in the selection and retention of subcontractors, including procurement of materials and leases of equipment.

a. The contractor shall notify all potential subcontractors and suppliers of his/her EEO obligations under this contract.

b. Disadvantaged business enterprises (DBE), as defined in 49 CFR 23, shall have equal opportunity to compete for and perform subcontracts which the contractor enters into pursuant to this contract. The contractor will use his best efforts to solicit bids from and to utilize DBE subcontractors or subcontractors with meaningful minority group and female representation among their employees. Contractors shall obtain lists of DBE construction firms from SHA personnel.

c. The contractor will use his best efforts to ensure subcontractor compliance with their EEO obligations.

9. **Records and Reports:** The contractor shall keep such records as necessary to document compliance with the EEO requirements. Such records shall be retained for a period of three years following completion of the contract work and shall be available at reasonable times and places for inspection by authorized representatives of the SHA and the FHWA.

a. The records kept by the contractor shall document the following:

(1) The number of minority and non-minority group members and women employed in each work classification on the project;

(2) The progress and efforts being made in cooperation with unions, when applicable, to increase employment opportunities for minorities and women;

(3) The progress and efforts being made in locating, hiring, training, qualifying, and upgrading minority and female employees; and

(4) The progress and efforts being made in securing the services of DBE subcontractors or subcontractors with meaningful minority and female representation among their employees.

b. The contractors will submit an annual report to the SHA each July for the duration of the project, indicating the number of minority, women, and non-minority group employees currently engaged in each work classification required by the contract work. This information is to be reported on Form FHWA-1391. If on-the-job training is being required by special provision, the contractor will be required to collect and report training data.

III. NONSEGREGATED FACILITIES

(Applicable to all Federal-aid construction contracts and to all related subcontracts of $10,000 or more.)

a. By submission of this bid, the execution of this contract or subcontract, or the consummation of this material supply agreement or purchase order, as appropriate, the bidder, Federal-aid construction contractor, subcontractor, material supplier, or vendor, as appropriate, certifies that the firm does not maintain or provide for its employees any segregated facilities at any of its establishments, and that the firm does not permit its employees to perform their services at any location, under its control, where segregated facilities are maintained. The firm agrees that a breach of this certification is a violation of the EEO provisions of this contract. The firm further certifies that no employee will be denied access to adequate facilities on the basis of sex or disability.

b. As used in this certification, the term "segregated facilities" means any waiting rooms, work areas, restrooms and washrooms, restaurants and other eating areas, timeclocks, locker rooms, and other storage or dressing areas, parking lots, drinking fountains, recreation or entertainment areas, transportation, and housing facilities provided for employees which are segregated by explicit directive, or are, in fact, segregated on the basis of race, color, religion, national origin, age or disability, because of habit, local custom, or otherwise. The only exception will be for the disabled when the demands for accessibility override (e.g. disabled parking).

c. The contractor agrees that it has obtained or will obtain identical certification from proposed subcontractors or material suppliers prior to award of subcontracts or consummation of material supply agreements of $10,000 or more and that it will retain such certifications in its files.

IV. PAYMENT OF PREDETERMINED MINIMUM WAGE

(Applicable to all Federal-aid construction contracts exceeding $2,000 and to all related subcontracts, except for projects located on roadways classified as local roads or rural minor collectors, which are exempt.)

1. **General:**

a. All mechanics and laborers employed or working upon the site of the work will be paid unconditionally and not less often than once a week and without subsequent deduction or rebate on any

account [except such payroll deductions as are permitted by regulations (29 CFR 3) issued by the Secretary of Labor under the Copeland Act (40 U.S.C. 276c)] the full amounts of wages and bona fide fringe benefits (or cash equivalents thereof) due at time of payment. The payment shall be computed at wage rates not less than those contained in the wage determination of the Secretary of Labor (hereinafter "the wage determination") which is attached hereto and made a part hereof, regardless of any contractual relationship which may be alleged to exist between the contractor or its subcontractors and such laborers and mechanics. The wage determination (including any additional classifications and wage rates conformed under paragraph 2 of this Section IV and the DOL poster (WH-1321) or Form FHWA-1495) shall be posted at all times by the contractor and its subcontractors at the site of the work in a prominent and accessible place where it can be easily seen by the workers. For the purpose of this Section, contributions made or costs reasonably anticipated for bona fide fringe benefits under Section 1(b)(2) of the Davis-Bacon Act (40 U.S.C. 276a) on behalf of laborers or mechanics are considered wages paid to such laborers or mechanics, subject to the provisions of Section IV, paragraph 3b, hereof. Also, for the purpose of this Section, regular contributions made or costs incurred for more than a weekly period (but not less often than quarterly) under plans, funds, or programs, which cover the particular weekly period, are deemed to be constructively made or incurred during such weekly period. Such laborers and mechanics shall be paid the appropriate wage rate and fringe benefits on the wage determination for the classification of work actually performed, without regard to skill, except as provided in paragraphs 4 and 5 of this Section IV.

b. Laborers or mechanics performing work in more than one classification may be compensated at the rate specified for each classification for the time actually worked therein, provided, that the employer's payroll records accurately set forth the time spent in each classification in which work is performed.

c. All rulings and interpretations of the Davis-Bacon Act and related acts contained in 29 CFR 1, 3, and 5 are herein incorporated by reference in this contract.

2. **Classification:**

a. The SHA contracting officer shall require that any class of laborers or mechanics employed under the contract, which is not listed in the wage determination, shall be classified in conformance with the wage determination.

b. The contracting officer shall approve an additional classification, wage rate and fringe benefits only when the following criteria have been met:

(1) the work to be performed by the additional classification requested is not performed by a classification in the wage determination;

(2) the additional classification is utilized in the area by the construction industry;

(3) the proposed wage rate, including any bona fide fringe benefits, bears a reasonable relationship to the wage rates contained in the wage determination.

(4) with respect to helpers, when such a classification prevails in the area in which the work is performed.

c. If the contractor or subcontractors, as appropriate, the laborers and mechanics (if known) to be employed in the additional classification or their representatives, and the contracting officer agree on the classification and wage rate (including the amount designated for fringe benefits where appropriate), a report of the action taken shall be sent by the contracting officer to the DOL, Administrator of the Wage and Hour Division, Employment Standards Administration, Washington, D.C. 20210. The Wage and Hour Administrator, or an authorized representative, will approve, modify, or disapprove every additional classification action within 30 days of receipt and so advise the contracting officer or will notify the contracting officer within the 30-day period that additional time is necessary.

d. In the event the contractor or subcontractors, as appropriate, the laborers or mechanics to be employed in the additional classification or their representatives, and the contracting officer do not agree on the proposed classification and wage rate (including the amount designated for fringe benefits, where appropriate), the contracting officer shall refer the questions, including the views of all interested parties and the recommendation of the contracting officer, to the Wage and Hour Administrator for determination. Said Administrator, or an authorized representative, will issue a determination within 30 days of receipt and so advise the contracting officer or will notify the contracting officer within the 30-day period that additional time is necessary

e. The wage rate (including fringe benefits where appropriate) determined pursuant to paragraph 2c or 2d of this Section IV shall be paid to all workers performing work in the additional classification from the first day on which work is performed in the classification.

3. **Payment of Fringe Benefits:**

a. Whenever the minimum wage rate prescribed in the contract for a class of laborers or mechanics includes a fringe benefit which is not expressed as an hourly rate, the contractor or subcontractors, as appropriate, shall either pay the benefit as stated in the wage determination or shall pay another bona fide fringe benefit or an hourly case equivalent thereof.

b. If the contractor or subcontractor, as appropriate, does not make payments to a trustee or other third person, he/she may consider as a part of the wages of any laborer or mechanic the amount of any costs reasonably anticipated in providing bona fide fringe benefits under a plan or program, provided, that the Secretary of Labor has found, upon the written request of the contractor, that the applicable standards of the Davis-Bacon Act have been met. The Secretary of Labor may require the contractor to set aside in a separate account assets for the meeting of obligations under the plan or program.

4. **Apprentices and Trainees (Programs of the U.S. DOL) and Helpers:**

a. *Apprentices:*

(1) Apprentices will be permitted to work at less than the predetermined rate for the work they performed when they are employed pursuant to and individually registered in a bona fide apprenticeship program registered with the DOL, Employment and Training Administration, Bureau of Apprenticeship and Training, or with a State apprenticeship agency recognized by the Bureau, or if a person is employed in his/her first 90 days of probationary employment as an apprentice in such an apprenticeship program, who is not individually registered in the program, but who has been certified by the Bureau of Apprenticeship and Training or a State

apprenticeship agency (where appropriate) to be eligible for probationary employment as an apprentice.

(2) The allowable ratio of apprentices to journeyman-level employees on the job site in any craft classification shall not be greater than the ratio permitted to the contractor as to the entire work force under the registered program. Any employee listed on a payroll at an apprentice wage rate, who is not registered or otherwise employed as stated above, shall be paid not less than the applicable wage rate listed in the wage determination for the classification of work actually performed. In addition, any apprentice performing work on the job site in excess of the ratio permitted under the registered program shall be paid not less than the applicable wage rate on the wage determination for the work actually performed. Where a contractor or subcontractor is performing construction on a project in a locality other than that in which its program is registered, the ratios and wage rates (expressed in percentages of the journeyman-level hourly rate) specified in the contractor's or subcontractor's registered program shall be observed.

(3) Every apprentice must be paid at not less than the rate specified in the registered program for the apprentice's level of progress, expressed as a percentage of the journeyman-level hourly rate specified in the applicable wage determination. Apprentices shall be paid fringe benefits in accordance with the provisions of the apprenticeship program. If the apprenticeship program does not specify fringe benefits, apprentices must be paid the full amount of fringe benefits listed on the wage determination for the applicable classification. If the Administrator for the Wage and Hour Division determines that a different practice prevails for the applicable apprentice classification, fringes shall be paid in accordance with that determination.

(4) In the event the Bureau of Apprenticeship and Training, or a State apprenticeship agency recognized by the Bureau, withdraws approval of an apprenticeship program, the contractor or subcontractor will no longer be permitted to utilize apprentices at less than the applicable predetermined rate for the comparable work performed by regular employees until an acceptable program is approved.

b. *Trainees:*

(1) Except as provided in 29 CFR 5.16, trainees will not be permitted to work at less than the predetermined rate for the work performed unless they are employed pursuant to and individually registered in a program which has received prior approval, evidenced by formal certification by the DOL, Employment and Training Administration.

(2) The ratio of trainees to journeyman-level employees on the job site shall not be greater than permitted under the plan approved by the Employment and Training Administration. Any employee listed on the payroll at a trainee rate who is not registered and participating in a training plan approved by the Employment and Training Administration shall be paid not less than the applicable wage rate on the wage determination for the classification of work actually performed. In addition, any trainee performing work on the job site in excess of the ratio permitted under the registered program shall be paid not less than the applicable wage rate on the wage determination for the work actually performed.

(3) Every trainee must be paid at not less than the rate specified in the approved program for his/her level of progress, expressed as a percentage of the journeyman-level hourly rate specified in the applicable wage determination. Trainees shall be paid fringe benefits in accordance with the provisions of the trainee program. If the trainee program does not mention fringe benefits, trainees shall be paid the full amount of fringe benefits listed on the wage determination unless the Administrator of the Wage and Hour Division determines that there is an apprenticeship program associated with the corresponding journeyman-level wage rate on the wage determination which provides for less than full fringe benefits for apprentices, in which case such trainees shall receive the same fringe benefits as apprentices.

(4) In the event the Employment and Training Administration withdraws approval of a training program, the contractor or subcontractor will no longer be permitted to utilize trainees at less than the applicable predetermined rate for the work performed until an acceptable program is approved.

c. *Helpers*:

Helpers will be permitted to work on a project if the helper classification is specified and defined on the applicable wage determination or is approved pursuant to the conformance procedure set forth in Section IV.2. Any worker listed on a payroll at a helper wage rate, who is not a helper under a approved definition, shall be paid not less than the applicable wage rate on the wage determination for the classification of work actually performed.

5. **Apprentices and Trainees (Programs of the U.S. DOT):**

Apprentices and trainees working under apprenticeship and skill training programs which have been certified by the Secretary of Transportation as promoting EEO in connection with Federal-aid highway construction programs are not subject to the requirements of paragraph 4 of this Section IV. The straight time hourly wage rates for apprentices and trainees under such programs will be established by the particular programs. The ratio of apprentices and trainees to journeymen shall not be greater than permitted by the terms of the particular program.

6. **Withholding:**

The SHA shall upon its own action or upon written request of an authorized representative of the DOL withhold, or cause to be withheld, from the contractor or subcontractor under this contract or any other Federal contract with the same prime contractor, or any other Federally-assisted contract subject to Davis-Bacon prevailing wage requirements which is held by the same prime contractor, as much of the accrued payments or advances as may be considered necessary to pay laborers and mechanics, including apprentices, trainees, and helpers, employed by the contractor or any subcontractor the full amount of wages required by the contract. In the event of failure to pay any laborer or mechanic, including any apprentice, trainee, or helper employed or working on the site of the work, all or part of the wages required by the contract, the SHA contracting officer may, after written notice to the contractor, take such action as may be necessary to cause the suspension of any further payment, advance, or guarantee of funds until such violations have ceased.

7. **Overtime Requirements:**

No contractor or subcontractor contracting for any part of the contract work which may require or involve the employment of laborers, mechanics, watchmen, or guards (including apprentices, trainees, and helpers described in paragraphs 4 and 5 above) shall require or permit any laborer, mechanic, watchman, or guard in any workweek in which he/she is employed on such work, to work in excess of 40 hours in such workweek unless such laborer, mechanic, watchman, or guard receives compensation at a rate not less than

one-and-one-half times his/her basic rate of pay for all hours worked in excess of 40 hours in such workweek.

8. **Violation:**

Liability for Unpaid Wages; Liquidated Damages: In the event of any violation of the clause set forth in paragraph 7 above, the contractor and any subcontractor responsible thereof shall be liable to the affected employee for his/her unpaid wages. In addition, such contractor and subcontractor shall be liable to the United States (in the case of work done under contract for the District of Columbia or a territory, to such District or to such territory) for liquidated damages. Such liquidated damages shall be computed with respect to each individual laborer, mechanic, watchman, or guard employed in violation of the clause set forth in paragraph 7, in the sum of $10 for each calendar day on which such employee was required or permitted to work in excess of the standard work week of 40 hours without payment of the overtime wages required by the clause set forth in paragraph 7.

9. **Withholding for Unpaid Wages and Liquidated Damages:**

The SHA shall upon its own action or upon written request of any authorized representative of the DOL withhold, or cause to be withheld, from any monies payable on account of work performed by the contractor or subcontractor under any such contract or any other Federal contract with the same prime contractor, or any other Federally-assisted contract subject to the Contract Work Hours and Safety Standards Act, which is held by the same prime contractor, such sums as may be determined to be necessary to satisfy any liabilities of such contractor or subcontractor for unpaid wages and liquidated damages as provided in the clause set forth in paragraph 8 above.

V. STATEMENTS AND PAYROLLS

(Applicable to all Federal-aid construction contracts exceeding $2,000 and to all related subcontracts, except for projects located on roadways classified as local roads or rural collectors, which are exempt.)

1. **Compliance with Copeland Regulations (29 CFR 3):**

The contractor shall comply with the Copeland Regulations of the Secretary of Labor which are herein incorporated by reference.

2. **Payrolls and Payroll Records:**

a. Payrolls and basic records relating thereto shall be maintained by the contractor and each subcontractor during the course of the work and preserved for a period of 3 years from the date of completion of the contract for all laborers, mechanics, apprentices, trainees, watchmen, helpers, and guards working at the site of the work.

b. The payroll records shall contain the name, social security number, and address of each such employee; his or her correct classification; hourly rates of wages paid (including rates of contributions or costs anticipated for bona fide fringe benefits or cash equivalent thereof the types described in Section 1(b)(2)(B) of the Davis Bacon Act); daily and weekly number of hours worked; deductions made; and actual wages paid. In addition, for Appalachian contracts, the payroll records shall contain a notation indicating whether the employee does, or does not, normally reside in the labor area as defined in Attachment A, paragraph 1. Whenever the Secretary of Labor, pursuant to Section IV, paragraph 3b, has found that the wages of any laborer or mechanic include the amount of any costs reasonably anticipated in providing benefits under a plan or program described in Section 1(b)(2)(B) of the Davis Bacon Act, the contractor and each subcontractor shall maintain records which show that the commitment to provide such benefits is enforceable, that the plan or program is financially responsible, that the plan or program has been communicated in writing to the laborers or mechanics affected, and show the cost anticipated or the actual cost incurred in providing benefits. Contractors or subcontractors employing apprentices or trainees under approved programs shall maintain written evidence of the registration of apprentices and trainees, and ratios and wage rates prescribed in the applicable programs.

c. Each contractor and subcontractor shall furnish, each week in which any contract work is performed, to the SHA resident engineer a payroll of wages paid each of its employees (including apprentices, trainees, and helpers described in Section IV, paragraphs 4 and 5, and watchmen and guards engaged on work during the preceding weekly payroll period). The payroll submitted shall set out accurately and completely all of the information required to be maintained under paragraph 2b of this Section V. This information may be submitted in any form desired. Optional Form WH-347 is available for this purpose and may be purchased from the Superintendent of Documents (Federal stock number 029-005-0014-1), U.S. Government Printing Office, Washington, D.C. 20402. The prime contractor is responsible for the submission of copies of payrolls by all subcontractors.

d. Each payroll submitted shall be accompanied by a "Statement of Compliance," signed by the contractor or subcontractor or his/her agent who pays or supervises the payment of the persons employed under the contract and shall certify the following:

(1) that the payroll for the payroll period contains the information required to be maintained under paragraph 2b of this Section V and that such information is correct and complete;

(2) that such laborer or mechanic (including each apprentice, trainee, and helper) employed on the contract during the payroll period has been paid the full weekly wages earned, without rebate, either directly or indirectly, and that no deductions have been made either directly or indirectly from the full wages earned, other than permissible deductions as set forth in the Regulations, 29 CFR 3;

(3) that each laborer or mechanic has been paid not less that the applicable wage rate and fringe benefits or cash equivalent for the classification of worked performed, as specified in the applicable wage determination incorporated into the contract.

e. The weekly submission of a properly executed certification set forth on the reverse side of Optional Form WH-347 shall satisfy the requirement for submission of the "Statement of Compliance" required by paragraph 2d of this Section V.

f. The falsification of any of the above certifications may subject the contractor to civil or criminal prosecution under 18 U.S.C. 1001 and 31 U.S.C. 231.

g. The contractor or subcontractor shall make the records required under paragraph 2b of this Section V available for inspection, copying, or transcription by authorized representatives of the SHA, the FHWA, or the DOL, and shall permit such representatives to interview employees during working hours on the job. If the contractor or subcontractor fails to submit the required records or to make them available, the SHA, the FHWA, the DOL, or all

may, after written notice to the contractor, sponsor, applicant, or owner, take such actions as may be necessary to cause the suspension of any further payment, advance, or guarantee of funds. Furthermore, failure to submit the required records upon request or to make such records available may be grounds for debarment action pursuant to 29 CFR 5.12.

VI. RECORD OF MATERIALS, SUPPLIES, AND LABOR

1. On all Federal-aid contracts on the National Highway System, except those which provide solely for the installation of protective devices at railroad grade crossings, those which are constructed on a force account or direct labor basis, highway beautification contracts, and contracts for which the total final construction cost for roadway and bridge is less than $1,000,000 (23 CFR 635) the contractor shall:

a. Become familiar with the list of specific materials and supplies contained in Form FHWA-47, "Statement of Materials and Labor Used by Contractor of Highway Construction Involving Federal Funds," prior to the commencement of work under this contract.

b. Maintain a record of the total cost of all materials and supplies purchased for and incorporated in the work, and also of the quantities of those specific materials and supplies listed on Form FHWA-47, and in the units shown on Form FHWA-47.

c. Furnish, upon the completion of the contract, to the SHA resident engineer on Form FHWA-47 together with the data required in paragraph 1b relative to materials and supplies, a final labor summary of all contract work indicating the total hours worked and the total amount earned.

2. At the prime contractor's option, either a single report covering all contract work or separate reports for the contractor and for each subcontract shall be submitted.

VII. SUBLETTING OR ASSIGNING THE CONTRACT

1. The contractor shall perform with its own organization contract work amounting to not less than 30 percent (or a greater percentage if specified elsewhere in the contract) of the total original contract price, excluding any specialty items designated by the State. Specialty items may be performed by subcontract and the amount of any such specialty items performed may be deducted from the total original contract price before computing the amount of work required to be performed by the contractor's own organization (23 CFR 635).

a. "Its own organization" shall be construed to include only workers employed and paid directly by the prime contractor and equipment owned or rented by the prime contractor, with or without operators. Such term does not include employees or equipment of a subcontractor, assignee, or agent of the prime contractor.

b. "Specialty Items" shall be construed to be limited to work that requires highly specialized knowledge, abilities, or equipment not ordinarily available in the type of contracting organizations qualified and expected to bid on the contract as a whole and in general are to be limited to minor components of the overall contract.

2. The contract amount upon which the requirements set forth in paragraph 1 of Section VII is computed includes the cost of material and manufactured products which are to be purchased or produced by the contractor under the contract provisions.

3. The contractor shall furnish (a) a competent superintendent or supervisor who is employed by the firm, has full authority to direct performance of the work in accordance with the contract requirements, and is in charge of all construction operations (regardless of who performs the work) and (b) such other of its own organizational resources (supervision, management, and engineering services) as the SHA contracting officer determines is necessary to assure the performance of the contract.

4. No portion of the contract shall be sublet, assigned or otherwise disposed of except with the written consent of the SHA contracting officer, or authorized representative, and such consent when given shall not be construed to relieve the contractor of any responsibility for the fulfillment of the contract. Written consent will be given only after the SHA has assured that each subcontract is evidenced in writing and that it contains all pertinent provisions and requirements of the prime contract.

VIII. SAFETY: ACCIDENT PREVENTION

1. In the performance of this contract the contractor shall comply with all applicable Federal, State, and local laws governing safety, health, and sanitation (23 CFR 635). The contractor shall provide all safeguards, safety devices and protective equipment and take any other needed actions as it determines, or as the SHA contracting officer may determine, to be reasonably necessary to protect the life and health of employees on the job and the safety of the public and to protect property in connection with the performance of the work covered by the contract.

2. It is a condition of this contract, and shall be made a condition of each subcontract, which the contractor enters into pursuant to this contract, that the contractor and any subcontractor shall not permit any employee, in performance of the contract, to work in surroundings or under conditions which are unsanitary, hazardous or dangerous to his/her health or safety, as determined under construction safety and health standards (29 CFR 1926) promulgated by the Secretary of Labor, in accordance with Section 107 of the Contract Work Hours and Safety Standards Act (40 U.S.C. 333).

3. Pursuant to 29 CFR 1926.3, it is a condition of this contract that the Secretary of Labor or authorized representative thereof, shall have right of entry to any site of contract performance to inspect or investigate the matter of compliance with the construction safety and health standards and to carry out the duties of the Secretary under Section 107 of the Contract Work Hours and Safety Standards Act (40 U.S.C. 333).

IX. FALSE STATEMENTS CONCERNING HIGHWAY PROJECTS

In order to assure high quality and durable construction in conformity with approved plans and specifications and a high degree of reliability on statements and representations made by engineers, contractors, suppliers, and workers on Federal-aid highway projects, it is essential that all persons concerned with the project perform their functions as carefully, thoroughly, and honestly as possible. Willful falsification, distortion, or misrepresentation with respect to any facts related to the project is a violation of Federal law. To prevent any misunderstanding regarding the seriousness of these and

similar acts, the following notice shall be posted on each Federal-aid highway project (23 CFR 635) in one or more places where it is readily available to all persons concerned with the project:

Notice to all Personnel engaged on Federal-Aid Highway Projects

18 U.S.C. 1020 reads as follows:

"Whoever, being an officer, agent, or employee of the United States, or of any State or Territory, or whoever, whether a person, association, firm, or corporation, knowingly makes any false statement, false representation, or false report as to the character, quality, quantity, or cost of the material used or to be used, or the quantity or quality of the work performed or to be performed, or the cost thereof in connection with the submission of plans, maps, specifications, contracts, or costs of construction on any highway or related project submitted for approval to the Secretary of Transportation; or

Whoever knowingly makes any false statement, false representation, false report or false claim with respect to the character, quality, quantity, or cost of any work performed or to be performed, or materials furnished or to be furnished, in connection with the construction of any highway or related project approved by the Secretary of Transportation; or

Whoever knowingly makes any false statement or false representation as to material fact in any statement, certificate, or report submitted pursuant to provisions of the Federal-aid Roads Act approved July 1, 1916, (39 Stat. 355), as amended and supplemented;

Shall be fined not more that $10,000 or imprisoned not more than 5 years or both."

X. IMPLEMENTATION OF CLEAN AIR ACT AND FEDERAL WATER POLLUTION CONTROL ACT

(Applicable to all Federal-aid construction contracts and to all related subcontracts of $100,000 or more.)

By submission of this bid or the execution of this contract, or subcontract, as appropriate, the bidder, Federal-aid construction contractor, or subcontractor, as appropriate, will be deemed to have stipulated as follows:

1. That any facility that is or will be utilized in the performance of this contract, unless such contract is exempt under the Clean Air Act, as amended (42 U.S.C. 1857 et seq., as amended by Pub.L. 92-604), and under the Federal Water Pollution Control Act, as amended (33 U.S.C. 1251 et seq., as amended by Pub.L. 92-500), Executive Order 11738, and regulations in implementation thereof (40 CFR 15) is not listed, on the date of contract award, on the U.S. Environmental Protection Agency (EPA) List of Violating Facilities pursuant to 40 CFR 15.20.

2. That the firm agrees to comply and remain in compliance with all the requirements of Section 114 of the Clean Air Act and Section 308 of the Federal Water Pollution Control Act and all regulations and guidelines listed thereunder.

3. That the firm shall promptly notify the SHA of the receipt of any communication from the Director, Office of Federal Activities, EPA, indicating that a facility that is or will be utilized for the contract is under consideration to be listed on the EPA List of Violating Facilities.

4. That the firm agrees to include or cause to be included the requirements of paragraph 1 through 4 of this Section X in every nonexempt subcontract, and further agrees to take such action as the government may direct as a means of enforcing such requirements.

XI. CERTIFICATION REGARDING DEBARMENT, SUSPENSION, INELIGIBILITY AND VOLUNTARY EXCLUSION

1. **Instructions for Certification - Primary Covered Transactions:** (Applicable to all Federal-aid contracts - 49 CFR 29)

a. By signing and submitting this proposal, the prospective primary participant is providing the certification set out below.

b. The inability of a person to provide the certification set out below will not necessarily result in denial of participation in this covered transaction. The prospective participant shall submit an explanation of why it cannot provide the certification set out below. The certification or explanation will be considered in connection with the department or agency's determination whether to enter into this transaction. However, failure of the prospective primary participant to furnish a certification or an explanation shall disqualify such a person from participation in this transaction.

c. The certification in this clause is a material representation of fact upon which reliance was placed when the department or agency determined to enter into this transaction. If it is later determined that the prospective primary participant knowingly rendered an erroneous certification, in addition to other remedies available to the Federal Government, the department or agency may terminate this transaction for cause of default.

d. The prospective primary participant shall provide immediate written notice to the department or agency to whom this proposal is submitted if any time the prospective primary participant learns that its certification was erroneous when submitted or has become erroneous by reason of changed circumstances.

e. The terms "covered transaction," "debarred," "suspended," "ineligible," "lower tier covered transaction," "participant," "person," "primary covered transaction," "principal," "proposal," and "voluntarily excluded," as used in this clause, have the meanings set out in the Definitions and Coverage sections of rules implementing Executive Order 12549. You may contact the department or agency to which this proposal is submitted for assistance in obtaining a copy of those regulations.

f. The prospective primary participant agrees by submitting this proposal that, should the proposed covered transaction be entered into, it shall not knowingly enter into any lower tier covered transaction with a person who is debarred, suspended, declared ineligible, or voluntarily excluded from participation in this covered transaction, unless authorized by the department or agency entering into this transaction.

g. The prospective primary participant further agrees by submitting this proposal that it will include the clause titled "Certification Regarding Debarment, Suspension, Ineligibility and Voluntary Exclusion-Lower Tier Covered Transaction," provided by the department or agency entering into this covered transaction, without modification, in all lower tier covered transactions and in all solicitations for lower tier covered transactions.

h. A participant in a covered transaction may rely upon a certification of a prospective participant in a lower tier covered

transaction that is not debarred, suspended, ineligible, or voluntarily excluded from the covered transaction, unless it knows that the certification is erroneous. A participant may decide the method and frequency by which it determines the eligibility of its principals. Each participant may, but is not required to, check the nonprocurement portion of the "Lists of Parties Excluded From Federal Procurement or Nonprocurement Programs" (Nonprocurement List) which is compiled by the General Services Administration.

i. Nothing contained in the foregoing shall be construed to require establishment of a system of records in order to render in good faith the certification required by this clause. The knowledge and information of participant is not required to exceed that which is normally possessed by a prudent person in the ordinary course of business dealings.

j. Except for transactions authorized under paragraph f of these instructions, if a participant in a covered transaction knowingly enters into a lower tier covered transaction with a person who is suspended, debarred, ineligible, or voluntarily excluded from participation in this transaction, in addition to other remedies available to the Federal Government, the department or agency may terminate this transaction for cause or default.

* * * * *

Certification Regarding Debarment, Suspension, Ineligibility and Voluntary Exclusion--Primary Covered Transactions

1. The prospective primary participant certifies to the best of its knowledge and belief, that it and its principals:

a. Are not presently debarred, suspended, proposed for debarment, declared ineligible, or voluntarily excluded from covered transactions by any Federal department or agency;

b. Have not within a 3-year period preceding this proposal been convicted of or had a civil judgement rendered against them for commission of fraud or a criminal offense in connection with obtaining, attempting to obtain, or performing a public (Federal, State or local) transaction or contract under a public transaction; violation of Federal or State antitrust statutes or commission of embezzlement, theft, forgery, bribery, falsification or destruction of records, making false statements, or receiving stolen property;

c. Are not presently indicted for or otherwise criminally or civilly charged by a governmental entity (Federal, State or local) with commission of any of the offenses enumerated in paragraph 1b of this certification; and

d. Have not within a 3-year period preceding this application/proposal had one or more public transactions (Federal, State or local) terminated for cause or default.

2. Where the prospective primary participant is unable to certify to any of the statements in this certification, such prospective participant shall attach an explanation to this proposal.

* * * * *

2. **Instructions for Certification - Lower Tier Covered Transactions:** (Applicable to all subcontracts, purchase orders and other lower tier transactions of $25,000 or more - 49 CFR 29)

a. By signing and submitting this proposal, the prospective lower tier is providing the certification set out below.

b. The certification in this clause is a material representation of fact upon which reliance was placed when this transaction was entered into. If it is later determined that the prospective lower tier participant knowingly rendered an erroneous certification, in addition to other remedies available to the Federal Government, the department, or agency with which this transaction originated may pursue available remedies, including suspension and/or debarment.

c. The prospective lower tier participant shall provide immediate written notice to the person to which this proposal is submitted if at any time the prospective lower tier participant learns that its certification was erroneous by reason of changed circumstances.

d. The terms "covered transaction," "debarred," "suspended," "ineligible," "primary covered transaction," "participant," "person," "principal," "proposal," and "voluntarily excluded," as used in this clause, have the meanings set out in the Definitions and Coverage sections of rules implementing Executive Order 12549. You may contact the person to which this proposal is submitted for assistance in obtaining a copy of those regulations.

e. The prospective lower tier participant agrees by submitting this proposal that, should the proposed covered transaction be entered into, it shall not knowingly enter into any lower tier covered transaction with a person who is debarred, suspended, declared ineligible, or voluntarily excluded from participation in this covered transaction, unless authorized by the department or agency with which this transaction originated.

f. The prospective lower tier participant further agrees by submitting this proposal that it will include this clause titled "Certification Regarding Debarment, Suspension, Ineligibility and Voluntary Exclusion-Lower Tier Covered Transaction," without modification, in all lower tier covered transactions and in all solicitations for lower tier covered transactions.

g. A participant in a covered transaction may rely upon a certification of a prospective participant in a lower tier covered transaction that is not debarred, suspended, ineligible, or voluntarily excluded from the covered transaction, unless it knows that the certification is erroneous. A participant may decide the method and frequency by which it determines the eligibility of its principals. Each participant may, but is not required to, check the Nonprocurement List.

h. Nothing contained in the foregoing shall be construed to require establishment of a system of records in order to render in good faith the certification required by this clause. The knowledge and information of participant is not required to exceed that which is normally possessed by a prudent person in the ordinary course of business dealings.

i. Except for transactions authorized under paragraph e of these instructions, if a participant in a covered transaction knowingly enters into a lower tier covered transaction with a person who is suspended, debarred, ineligible, or voluntarily excluded from participation in this transaction, in addition to other remedies available to the Federal Government, the department or agency with which this transaction originated may pursue available remedies, including suspension and/or debarment.

* * * * *

Certification Regarding Debarment, Suspension, Ineligibility and Voluntary Exclusion--Lower Tier Covered Transactions:

1. The prospective lower tier participant certifies, by submission of this proposal, that neither it nor its principals is presently debarred, suspended, proposed for debarment, declared ineligible, or voluntarily excluded from participation in this transaction by any Federal department or agency.

2. Where the prospective lower tier participant is unable to certify to any of the statements in this certification, such prospective participant shall attach an explanation to this proposal.

* * * * *

XII. CERTIFICATION REGARDING USE OF CONTRACT FUNDS FOR LOBBYING

(Applicable to all Federal-aid construction contracts and to all related subcontracts which exceed $100,000 - 49 CFR 20)

1. The prospective participant certifies, by signing and submitting this bid or proposal, to the best of his or her knowledge and belief, that:

a. No Federal appropriated funds have been paid or will be paid, by or on behalf of the undersigned, to any person for influencing or attempting to influence an officer or employee of any Federal agency, a Member of Congress, an officer or employee of Congress, or an employee of a Member of Congress in connection with the awarding of any Federal contract, the making of any Federal grant, the making of any Federal loan, the entering into of any cooperative agreement, and the extension, continuation, renewal, amendment, or modification of any Federal contract, grant, loan, or cooperative agreement.

b. If any funds other than Federal appropriated funds have been paid or will be paid to any person for influencing or attempting to influence an officer or employee of any Federal agency, a Member of Congress, an officer or employee of Congress, or an employee of a Member of Congress in connection with this Federal contract, grant, loan, or cooperative agreement, the undersigned shall complete and submit Standard Form-LLL, "Disclosure Form to Report Lobbying," in accordance with its instructions.

2. This certification is a material representation of fact upon which reliance was placed when this transaction was made or entered into. Submission of this certification is a prerequisite for making or entering into this transaction imposed by 31 U.S.C. 1352. Any person who fails to file the required certification shall be subject to a civil penalty of not less than $10,000 and not more than $100,000 for each such failure.

3. The prospective participant also agrees by submitting his or her bid or proposal that he or she shall require that the language of this certification be included in all lower tier subcontracts, which exceed $100,000 and that all such recipients shall certify and disclose accordingly.

LOUISIANA
DEPARTMENT OF TRANSPORTATION AND DEVELOPMENT

REQUIRED CONTRACT PROVISIONS FOR DBE PARTICIPATION IN FEDERAL AID CONSTRUCTION CONTRACTS (DBE NO GOAL PROJECT)

A. AUTHORITY AND DIRECTIVE: The Code of Federal Regulations, Title 49, Part 26 (49 CFR 26) as amended and the Louisiana Department of Transportation and Development's (DOTD) Disadvantaged Business Enterprise (DBE) Program, are hereby made a part of and incorporated by reference into this contract. Copies of these documents are available upon request, from DOTD, Compliance Programs Office, P. O. Box 94245, Baton Rouge, LA 70804-9245.

B. POLICY: It is the policy of the DOTD that it shall not discriminate on the basis of race, color, national origin, or sex in the award of any United States Department of Transportation (US DOT) financially assisted contracts or in the administration of its DBE program or the requirements of 49 CFR Part 26. The DOTD shall take all necessary and reasonable steps under 49 CFR Part 26 to ensure nondiscrimination in the award and administration of US DOT assisted contracts. The DBE program, as required by 49 CFR Part 26 and as approved by US DOT, is incorporated by reference in this agreement. Implementation of this program is a legal obligation and failure to carry out its terms shall be treated as a violation of this agreement. Upon notification of failure to carry out the approved DBE program, the US DOT may impose sanctions as provided for under 49 CFR Part 26 and may in appropriate cases, refer the matter for enforcement under 18 U.S.C. 1001 and/or the Program Fraud Civil Remedies Act of 1986 (31 U.S.C. 3801 et seq).

C. DBE OBLIGATION: The contractor, subrecipient or subcontractor shall not discriminate on the basis of race, color, national origin, or sex in the performance of this contract. The contractor shall carry out applicable requirements of 49 CFR Part 26 in the award and administration of US DOT assisted contracts. Failure by the contractor to carry out these requirements is a material breach of this contract, which may result in the termination of this contract or such other remedy as the DOTD deems appropriate.

The preceding policy and DBE obligation shall apply to this contract and shall be included in the requirements of any subcontract. Failure to carry out the requirements set forth therein shall constitute a breach of contract and, after notification by DOTD, may result in termination of the contract, a deduction from the contract funds due or to become due the contractor or other such remedy as DOTD deems appropriate. The contractor is encouraged to use the services offered by banks in the community which are owned and controlled by minorities or women when feasible and beneficial.

The term DBE is inclusive of women business enterprises (WBE) and all obligations applicable to DBE shall apply to firms certified and listed as WBE.

D. SPECIFIC CONTRACTOR REQUIREMENTS: This project has not been selected for a specific DBE goal; however, the contractor is required to meet the following obligations and by signing this bid gives the assurances that:

(1) The contractor shall not discriminate on the basis of race, color, national origin, or sex in subcontracting work on this project.

(2) The contractor shall promptly pay subcontractors and suppliers their respective subcontract amounts within 14 calendar days after the contractor receives payment from DOTD for the items of work performed by the subcontractors in accordance with Louisiana Revised Statute 9:2784. Retainage may not be withheld.

a. Delay or postponement of payment to the subcontractor may be imposed by the contractor only when there is evidence that the subcontractor has failed to pay its labor force and suppliers for materials received and used on the project. Delay or postponement must have written approval by the Project Engineer.

(3) The contractor shall submit DOTD Forms OMF-1A, Request to Sublet, and OMF-2A, Subcontractor's EEO Certification and have them approved by the DOTD prior to any subcontracting work being performed. The requirements of Subsection 108.01, Subletting of Contract, of the Project Specifications shall be met.

(4) The contractor understands that these provisions are applicable to all bidders including DBE bidders.

General Decision Number: LA080014 03/13/2009 LA14

Superseded General Decision Number: LA20070040

State: Louisiana

Construction Type: Highway

Counties: Jefferson, Orleans, Plaquemines, St Bernard, St Charles, St James, St John the Baptist and St Tammany Counties in Louisiana.

HIGHWAY CONSTRUCTION PROJECTS (Does not include building structures in rest area projects)

Modification Number	Publication Date
0	02/08/2008
1	05/09/2008
2	06/20/2008
3	07/18/2008
4	09/05/2008
5	01/16/2009
6	02/13/2009
7	03/13/2009

CARP1098-005 02/01/2006

ST. JAMES PARISH (North of the Mississippi River)

	Rates	Fringes
PILEDRIVERMAN	$ 19.92	5.65

CARP1846-002 02/01/2006

JEFFERSON, ORLEANS, PLAQUEMINES, ST. BERNARD, ST. CHARLES, ST. JAMES (South of the Mississippi River), ST. JOHN THE BAPTIST, AND ST. TAMMANY PARISHES

	Rates	Fringes
PILEDRIVERMAN	$ 19.92	5.00

---

* ELEC0130-010 12/01/2008

JEFFERSON, ORLEANS, PLAQUEMINES, ST. BERNARD, ST. CHARLES, ST. JAMES, AND ST. JOHN THE BAPTIST PARISHES

	Rates	Fringes
ELECTRICIAN (including		

traffic signal wiring and
installation).....$ 25.00 8.33

---

* ELEC1077-007 03/01/2009

ST. TAMMANY PARISH

	Rates	Fringes
ELECTRICIAN (including traffic signal wiring and installation)	$ 21.50	6.26

ENGI0406-015 07/01/2008

	Rates	Fringes
POWER EQUIPMENT OPERATOR		
Asphalt/Aggregate Spreader	$ 20.76	5.70

IRON0058-004 06/01/2008

	Rates	Fringes
IRONWORKER, STRUCTURAL	$ 19.40	6.82

SULA2004-014 07/30/2004

	Rates	Fringes
CARPENTER (including formbuilding/formsetting)	$ 13.42	3.04
Cement Mason/Concrete Finisher	$ 13.24	1.68
IRONWORKER, REINFORCING	$ 15.84	3.47
Laborers		
Asphalt Raker	$ 10.13	0.18
General	$ 9.26	1.14
Guardrail	$ 8.81	1.80
Mason Tender	$ 8.51	1.20
Pipelayer	$ 9.99	1.20
Striping/Pavement Marker includes paint striping and attachment of reflector buttons	$ 8.24	1.20
Traffic Control including flagger, sign placement, barricades, and cones	$ 8.39	1.80
Painter, Brush, Spray and Roller	$ 14.16	2.03
Power Equipment Operators		
Asphalt Paving Machine	$ 14.38	0.18
Asphalt Screed	$ 13.76	2.20

Backhoe/Excavator	$ 13.93	3.00
Broom/Sweeper	$ 12.78	2.92
Bulldozer	$ 13.58	0.00
Crane	$ 17.20	3.30
Front End Loader	$ 13.31	0.00
Mechanic	$ 13.53	2.92
Milling/Cold Planing Machine includes Rotomill and CMI Cutter	$ 15.50	0.00
Motor Grader/Blade	$ 14.42	3.02
Oiler	$ 13.91	2.37
Post Driver	$ 13.73	0.00
Roller	$ 13.11	3.30
Trackhoe	$ 11.00	0.00
Trenching/Boring Machine	$ 12.51	0.00
Truck drivers		
Dump (all types)	$ 10.64	0.18
Flatbed	$ 10.87	0.00
Lowboy	$ 13.24	0.00
Pickup	$ 10.60	0.00
Water	$ 12.00	0.00

WELDERS - Receive rate prescribed for craft performing operation to which welding is incidental.

==========

Unlisted classifications needed for work not included within the scope of the classifications listed may be added after award only as provided in the labor standards contract clauses (29CFR 5.5 (a) (1) (ii)).

In the listing above, the "SU" designation means that rates listed under the identifier do not reflect collectively bargained wage and fringe benefit rates. Other designations indicate unions whose rates have been determined to be prevailing.

WAGE DETERMINATION APPEALS PROCESS

1.) Has there been an initial decision in the matter? This can be:

* an existing published wage determination
* a survey underlying a wage determination
* a Wage and Hour Division letter setting forth a position on a wage determination matter
* a conformance (additional classification and rate) ruling

On survey related matters, initial contact, including requests for summaries of surveys, should be with the Wage and Hour Regional Office for the area in which the survey was conducted

because those Regional Offices have responsibility for the Davis-Bacon survey program. If the response from this initial contact is not satisfactory, then the process described in 2.) and 3.) should be followed.

With regard to any other matter not yet ripe for the formal process described here, initial contact should be with the Branch of Construction Wage Determinations. Write to:

Branch of Construction Wage Determinations
Wage and Hour Division
U.S. Department of Labor
200 Constitution Avenue, N.W.
Washington, DC 20210

2.) If the answer to the question in 1.) is yes, then an interested party (those affected by the action) can request review and reconsideration from the Wage and Hour Administrator (See 29 CFR Part 1.8 and 29 CFR Part 7). Write to:

Wage and Hour Administrator
U.S. Department of Labor
200 Constitution Avenue, N.W.
Washington, DC 20210

The request should be accompanied by a full statement of the interested party's position and by any information (wage payment data, project description, area practice material, etc.) that the requestor considers relevant to the issue.

3.) If the decision of the Administrator is not favorable, an interested party may appeal directly to the Administrative Review Board (formerly the Wage Appeals Board). Write to:

Administrative Review Board
U.S. Department of Labor
200 Constitution Avenue, N.W.
Washington, DC 20210

4.) All decisions by the Administrative Review Board are final.

==========

END OF GENERAL DECISION

Louisiana
Department of Transportation
and
Development

Traffic Control Standard
Number 18A

TRAFFIC SIGNAL CONTROL SYSTEM

Revised
January 12, 2008

STATE OF LOUISIANA
CARL E. COURVILLE
REG. No. 29312
REGISTERED
PROFESSIONAL
ENGINEER
IN
CIVIL ENGINEERING

2/28/08

Table of Contents

Page No.

1.0 INTRODUCTION 9

2.0 CLOSED-LOOP COMPUTER OPERATING SYSTEM 9
- 2.1 Software Description 9
- 2.2 Software Features 10
- 2.3 Dynamic Displays 10
  - 2.3.1 Intersection Display 11
  - 2.3.2 System Map Display 11
- 2.4 System Printouts 12
  - 2.4.1 Computer Events 12
  - 2.4.2 Event Reports 12
  - 2.4.3 Status Reports 13
  - 2.4.4 Logs 13
- 2.5 Database Management 13
  - 2.5.1 Programming Displays 13
  - 2.5.2 Upload/Download 13
  - 2.5.3 Backup Database 14
  - 2.5.4 Auto Print 14
- 2.6 Security 14
- 2.7 Directories 15
- 2.8 Database Backup and Restore 15
- 2.9 Software Maintenance Agreements 15
  - 2.9.1 Performance 15
  - 2.9.2 CPU Limitations 15
  - 2.9.3 Backup Provisions 16
  - 2.9.4 Operational Restrictions 16
  - 2.9.5 Maintenance Standards 16
  - 2.9.6 Source Code 16

3.0 SYSTEM COMMUNICATIONS 16
- 3.1 System Commands 16
- 3.2 Status Data 17
- 3.3 Upload/Download 17
- 3.4 Operation 17
- 3.5 Intra-System Communication 18
- 3.6 Inter-System Radio System Communication 18
  - 3.6.1 Radio Modem 18
  - 3.6.2 Antenna 19
  - 3.6.3 Antenna Tower 19
  - 3.6.4 Central Office Radio Terminal 20
  - 3.6.5 Telephone Terminal Boards (For Information Only) 20

SYSTEM MASTER CAPABILITIES 20
3.7 Design Requirements 20
3.8 Traffic Plan Selection 21
3.8.1 Traffic Responsive Operation 22
3.8.2 Time-of-Day/Day-of-Week/Week-of-Year Schedule 23
3.8.3 External Commands 24
3.8.4 Manual Entry 24
3.8.5 Pattern Mode Entry (Test Command) 24
3.9 Diagnostics 24
3.9.1 Power Fail Restart 24
3.9.2 Device Event Reports 24
3.9.3 Detector Diagnostics 26
3.10 Monitor Events 26
3.10.1 Program and TOD Changes 27
3.10.2 System Events 27
3.10.3 Device Diagnostics 28
3.11 Real-Time Detector Logs 28
3.11.1 System Detector Log 28
3.11.2 Sample Period Log 28
3.12 Status Reports 29
3.12.1 System Status 29
3.12.2 Intersection Controller Failure Summary 30
3.12.3 System Detector Failure Summary 30
3.12.4 Current Detector Log 30
3.12.5 Stored Events 30

4.0 COORDINATION/SYSTEM OPERATION COMMANDS 30
4.1 Transition Cycles 31
4.1.1 Free to Coordinated Transition 31
4.1.2 Coordinated Command Transfer 31
4.2 Cycle 31
4.2.1 Synchronization 31
4.2.2 Sync Monitor 32
4.2.3 Hardwired Interconnect 32
4.3 Offset 32
4.3.1 Offset Correction 32
4.3.2 Short-Way Offset Seeking 32
4.3.3 Dwell 33
4.4 Split 33
4.4.1 Split Intervals 33
4.4.2 Coordinated Phase Split Extension 33
4.5 Permissive Periods 33
4.5.1 Yield Point 33
4.5.2 Permissive Periods 34
4.5.3 Single Permissive Period 34
4.6 Cycle Programming 34

4.6.1 Coordinated Phases 34
4.6.2 Phase Sequence 35
4.6.3 Phase Omit 35
4.7 Crossing Arterial Control 35
4.8 Free (Operation) 35
4.9 Manual Control 36
4.10 Program Control 36
4.11 Modes of Interconnect 36
4.12 Master Coordinator 36

5.0 TIME-BASED CONTROL/NON-INTERCONNECTED COORDINATION 36
5.1 Clock/Calendar 37
5.1.1 Clock Accuracy 37
5.1.2 Time and Date Entry 37
5.1.3 Leap Year and Daylight Savings Time 37
5.2 Time Based Control 37
5.2.1 Program Format 37
5.2.2 Holidays 37
5.2.3 Program Selection 38
5.2.4 Manual Program Selection 38
5.3 Non-Interconnected Coordination 38
5.3.1 Re-Sync Time 38
5.3.2 Synchronization Point 38

6.0 CONTROLLER UNIT FEATURES (STOCK # 14-06-2710; 14-06-2720) 38
6.1 Design Requirements 38
6.2 Keyboard 40
6.3 EEPROM Data Module 40
6.3.1 Data Module 40
6.3.2 Firmware 40
6.4 Display 41
6.5 Operating Displays 41
6.5.1 Dynamic Displays 41
6.5.2 Controller Timing Displays 42
6.5.3 Programming Displays 42
6.6 Programming 42
6.7 Programming Security 43
6.8 Memory Clear 43
6.9 Interface Connectors 43
6.10 Printed Circuit Boards 44
6.11 Serviceability 44
6.12 Service Equipment 45

7.0 ACTUATED CONTROL 45
7.1 Phase Sequence 45
7.1.1 Four Phase Diamond Operation 46

7.1.2 Three Phase Diamond Operation 48
7.2 Timing Intervals – All Sequences 49
7.2.1 Guaranteed Interval 50
7.2.2 Maximum Green Intervals 50
7.2.3 Maximum Green Extension 50
7.2.4 Volume Density Intervals 50
7.3 Overlaps 50
7.3.1 Overlap Timing 50
7.3.2 Multi-Overlap Operation 51
7.4 Recall Functions 51
7.5 Initialization 51
7.6 Additional Features 51
7.6.1 Last Car Passage 51
7.6.2 Dual Entry 52
7.6.3 Conditional Service 52
7.6.4 Pedestrian Functions 52
7.6.5 Backup Protection 52
7.6.6 Simultaneous Gap Termination 53

8.0 DETECTOR INPUT FUNCTIONS 53
8.1 Design Requirements 53
8.2 Detector Input Programming 53
8.2.1 Standard Detector Input 53
8.2.2 Delay and Extend Detector Input Timing 53
8.2.3 Phase Extending Detector Input 54
8.2.4 Call Detector Programming 54

9.0 PREEMPTION 54
9.1 Priority/Non-Priority Preemptor Design Requirements 54
9.1.1 Preemptor Call Priority 54
9.1.2 Preemptor Call Memory 54
9.2 Priority/Non-Priority Preemptor Timing 55
9.2.1 Preemptor Timing Intervals 55
9.2.2 Delay Time 55
9.2.3 Duration Time 55
9.2.4 Minimal Times 55
9.2.5 Pedestrian Timing 55
9.2.6 Overlap Timing 56
9.2.7 Track Clearance 56
9.2.8 Limited Sequence 56
9.2.9 Limited Sequence Phases 56
9.2.10 Limited Sequence Timing 56
9.2.11 Exit Phases 57
9.3 Preemptor Active Output 57
9.4 Power Interruption 57
9.5 Preemptor Stop Time 57

AUTOMATIC FLASH 57

10.0 CONFLICT MONITOR 58
10.1 Mechanical Design 58
10.2 Electrical Design 58
10.3 Communication 59

11.0 SOLID STATE SIGNAL LOAD SWITCHES 61

12.0 SIGNAL FLASH TRANSFER RELAY 61
12.1 Physical Design 61
12.2 Electrical Design 61

13.0 SOLID STATE FLASHER 62

14.0 VEHICLE AND PEDESTRIAN DETECTORS 62
14.1 Sensitivity and Accuracy 62
14.2 Operation Modes 63
14.3 Fail Safe 63
14.4 Control Voltage 63
14.5 Control Switches 63
14.6 Printed Circuit Board Design 63
14.7 Pedestrian Detector Isolation 63
14.8 Pedestrian Isolation Card Connector 64
14.9 Detector Card Rack 64

15.0 MECHANICAL CONSTRUCTION OF ENCLOSURES 66
(Stock # 14-06-1440; 14-06-1450; 14-06-1480; 14-06-1485) 66
15.1 Sheet Aluminum 66
15.2 Cast Aluminum 66
15.3 Outline Dimensions 66
15.4 Finish and Surface Preparation 67
15.4.1 Painted Aluminum Cabinets 67
15.4.2 Unpainted Aluminum Cabinets 67
15.5 Shelves 67
15.6 Top Surface Construction 68
15.7 Doors 68
15.7.1 Main Cabinet Door 68
15.7.2 Hinges 68
15.7.3 Door Stop 68
15.7.4 Locking Mechanism 68
15.7.5 Door Opening 69
15.7.6 Police Compartment 69
15.8 Cabinet Mounting 70
15.8.1 Pole Mounted Cabinets, Types 2 and 3 70
15.8.2 Pedestal Mounted Cabinets , Type 2 or 3 70

15.8.3 Base Mounted Cabinets, Types 5, 6, and 7 71
15.8.4 Anchor Bolts 71
15.9 Cabinet Structural Tests 71
15.9.1 Hinges and Door 71
15.9.2 Door Stop 71
15.9.3 Lock 71
15.9.4 Shelves and Drawer 72
15.10 Equipment Protection 72
15.11 Rain Test 72
15.12 Auxiliary Equipment 72
15.12.1 Fan and Cooling System 72
15.12.2 Air Filter 73
15.12.3 Cabinet Light 73
15.12.4 Cabinet Hubs 73
15.12.5 Clamp Pole Mounted Cabinet 74
15.12.6 Adapter Pole Mounted Cabinet 74
15.12.7 Adapter Slip Fit, 4-Inch Pipe 75

16.0 CABINET INTERIOR PANELS 75
16.1 General Requirements 75
16.2 General Wiring Design Requirements 75
16.3 Identification of Components, Terminals and Connectors 75
16.4 Implementation of Equipment Capabilities 76
16.5 Back Panel 76
16.5.1 Connectors 77
16.5.2 Harness Wire Termination 77
16.5.3 Load Switches and Flash Transfer Relays 78
16.5.4 Signal Field Circuits 79
16.6 Power Panel 79
16.6.1 Control Switches 80
16.6.2 Breakers 80
16.6.3 Surge Protection and Filtration 81
16.6.4 Signal Bus Operation 81
16.6.5 Convenience Outlet 81
16.6.6 Power Panel Isolation 81
16.7 Detector and Auxiliary Control Panels 81
16.7.1 Auxiliary Control Function 82
16.7.2 Detector Panel for Types 3 and 5 Cabinets 83
16.7.3 Detector Panel Test Switches 83
16.7.4 Field Wiring – Detector and Auxiliary Panels 83
16.7.5 Communication Harnesses 83
16.7.6 Lightning Protection 84
16.8 Police Panel 84

CABINET WIRES AND WIRING 85

17.0 CABINET MECHANICAL AND ELECTRICAL HARDWARE 86
17.1 Terminal Blocks 86
17.2 Wiring Terminals 87
17.3 Multiple Pin Connectors 87
17.4 Switches 87
17.5 Load Switches and Relay Bases 87
17.6 Cable Clamps 88
17.7 Fuses and Holders 88
17.8 Relay and Motor Suppressor 88
17.9 Identification Sleeves 88

18.0 TESTING 88

19.0 TRAINING 89
19.1 Operational Training 89
19.2 Maintenance Training 90
19.3 Technician Training 90
19.4 Engineering Training 91

20.0 WARRANTY 91

21.0 DOCUMENTATION 91
21.1 Closed Loop System Operation Manual 91
21.2 Equipment Manuals 91
21.3 Cabinet Wiring 92

APPENDIX: Pin/Socket Assignment for D and E Connectors in the Back Panel 93
Figure 18A-1: Type 3 Cabinet Door Mounting Scheme 94
Figure 18A-2: Controller Foundation Detail 95
Figure 18A-3: Cabinet Back Panel Mounting Scheme 96
Figure 18A-4: Diamond Intersection Phase Assignment 97
Figure 18A-5: Vehicle Detector Assignment – 4 Phase Diamond 98
Figure 18A-6: Vehicle Detector Assignment – 3 Phase Diamond 99

1.0 INTRODUCTION.

This specification sets forth the minimum requirements for a shelf-mounted, digital, solid-state traffic control system including and to be furnished with time-based coordination, closed-loop system communication/coordination, multiple railroad/fire preemption sequences, and hardwired/telemetry interconnect capable of operating as both a master and secondary. All components needed to operate as both a master and secondary shall be provided for in each assembly. The system design shall be based on the requirements of NEMA Standards Publication No. TS-2, 1998. Controller sequencing referenced in this standard for diamond intersections emulates the design and standards from the Texas Department of Highways and the Texas Transportation Institute. The controller should have a database that conforms to Section 3.5 of the current NEMA NTCIP specifications.

All components and accessories shall comply with the NEMA testing requirements and a Certification of Compliance shall be presented with each bid for that equipment being offered. The operational requirements herein extend the requirement of NEMA controllers and supersede NEMA TS-2 where differences occur.

All equipment and operational characteristics specified herein shall be provided, except where noted.

2.0 CLOSED-LOOP COMPUTER OPERATING SYSTEM.

The closed-loop central operating system shall be a traffic management program for hard-disk supported IBM personal computers and compatible equipment which creates a system network using the principle system components. The software shall operate using Microsoft's Windows operating system. The software shall be programmed resident for the operating system.

2.1 SOFTWARE DESCRIPTION.

The software shall be loaded into the specified personal computer and operationally verified by the supplier. Back-up software shall be supplied on a compact disk.

The software shall be licensed to the agency for its use on a single computer or each computer specified in the system. Software improvements and enhancements to the supplied version shall be furnished to this agency at no additional cost. Software is supplied when indicated on the plans for a state job and will be specific to a highway district.

Programming displays, on the PC screen, shall aid the operator in entering data from the PC keyboard. These displays shall be arranged in using a tool bar format. The main tool bar shall allow the user to select a major function. A sub-tool bar shall be allowed for selection of a specific area within that function when it exists.

The central computer software shall provide rapid movement through menus, sub-menus and data base pages and limited only by the operating speed of the computer. Returning to the main menu or sub-menu shall be selected by pressing a single key.

Menus and sub-menus shall not contain mnemonics or codes for descriptions. Additional screens shall be provided where necessary to explain keyboard procedure. All icons that are defined within a tool bar shall be described in a help line as the cursor is placed over that icon.

Traffic engineering terminology shall be used throughout the programming displays. Display organization and data entry approach shall allow system operators to program the central computer without using reference cards or manuals.

2.2 SOFTWARE FEATURES.

Once the computer power-up routine is complete, the system shall be in monitor mode. It shall be possible for the operator to exit this mode and enter the user mode, and vice-versa.

In monitor mode, central computer shall continue to monitor events even if the printer is off-line. Upon restoration of the printer, it shall print a hard-copy of events occurring prior to and during printer off-line.

Central computer software shall provide:

a. Dynamic Displays
b. System Printouts
c. Data Base Management
d. Security
e. Directories
f. Data Back-up

2.3 DYNAMIC DISPLAYS.

Central computer shall display the following in real-time color graphics selected from the menus:

a. Intersection Display
b. System Map Display

All text data shall be displayed in traffic engineering terms. Mnemonics shall be acceptable; however, the need for reference guides and manuals shall not be acceptable. All information shall be simultaneously and continuously displayed until canceled by the operator. Displays shall not affect system on-street operation. The displays shall have a minimum one second resolution.

Intersection Display.

The central computer shall display the operation of any selected intersection controller within any selected system.

Each display shall be user-created to indicate the intersection configuration, including any "T" and standard diamonds, on a single screen display. The intersection display shall show as a minimum:

a. Intersection configuration layout for all possible phasing of intersection controllers including overlaps.
b. All vehicle signal indications, (R,Y,G) for each active phase.
c. All pedestrian signal indications: walk, flashing and solid don't walk, for all 16 active phases.
d. Vehicle and pedestrian detector actuation for each displayed phase.
e. Cycle, offset, split or plan in effect.
f. Arterial master and intersection controller identifier numbers, including intersection street names.
g. Central computer and local intersection controller TOD clocks.

The display shall include dynamic statuses of the arterial master and the intersection controller. Arterial master status shall consist of operational status, cycle, offset, split, plan in effect, cycle length, cycle countdown, and status of special functions. System control mode status shall include manual, external, time-of-day, or traffic responsive operation. This status shall indicate whether the system is operating under plan, time-base coordination, or time-base backup.

Intersection controller dynamic data shall consist of operational status; non-interconnected coordination, coordination offset value, or free/plan indicator; split values based on cycle and split in effect; preemption status; and diagnostic indications. Operational status shall include on-line, off-line, failed, or disabled. If the intersection controller is off-line or failed, the conditions causing that failure shall also be displayed. All diagnostic indications having alarm status shall be shown flashing. Alarms, preempt call numbers, and preemptor in effect shall also be shown. If preempt is in a flashing operation, it shall be displayed as flashing.

2.3.2 System Map Display.

System Map Display shall provide geometric layout of the system for a minimum of 32 intersections simultaneously and show real time display. The display shall also indicate the relative placements for a minimum of sixteen system detectors. Any intersection shall be selected to present a full screen display as stated in Section 2.3.1.

A map editor shall permit the user to lay-out the intersections in their relative physical relationship to each other, place the system detectors anywhere along the approaches, and number the intersections appropriately. Five-legged intersections, central business district layouts (CBD), and angled approaches shall be possible.

A text editor shall permit the user to create a minimum of 50, 20-character strings and place them on the display. This feature shall allow labeling streets, detector identification, or other points-of-interest. All text would preferably be placed at any angle on the screen. For instance, street names shall follow the angle of the drawn street (horizontal, vertical, or diagonally), if desired.

Display data shall include current system operating parameters, special function status, cycle countdown, zone control mode of operation, and consolidated intersection status.

Consolidated intersection status shall indicate if an intersection is on-line, free, has a coordination fault, is in preemption or flash, or has a communication failure.

2.4 SYSTEM PRINTOUTS.

System printouts present system readiness and operational status and are used for analyzing system performance. The printouts shall be divided into four categories: Computer Events, Event Reports, Status Reports, and Logs, as detailed in this specification.

2.4.1 Computer Events.

The central computer shall provide a monitor mode of operation to receive status change and operating failure event reports from any arterial master or isolated controllers.

Events shall be allowed for display on the central computer terminal or printed as a hard copy when they are received. Events shall consist of system identification, time and date of event occurrence, device identification (if device diagnostic event), and event description.

The central computer shall store events in a hard disk file to produce event reports, as needed. It shall be possible to transfer event files to a storage diskette for historical record keeping. Event files shall be removed from hard disk after file transfer to storage diskette to prevent overflowing the hard disk.

2.4.2 Event Reports.

Event report capability shall be provided for events occurring on one day, or group of days, from central computer files on the hard disk or storage diskette.

A directory search capability shall be provided that lists all event files for any system by date, on the selected disk drive. If one day is selected, the date shall be entered directly or by directory search. Directory search shall be used to select dates for event reports for a group of days.

It shall be possible to display and print events as received or sorted by event type. If event type selected is for a system device, it shall be possible to specify all devices or a single device.

Menus shall be provided to facilitate event type selection. Program operation shall allow interactive operation for preparing an event report for any combination of event type and system device.

2.4.3 Status Reports.

Status reports shall be generated by the arterial master controller in response to a manual command by the operator at the central computer. These reports shall present an immediate record of system operational status on the central computer display. Provision shall be made for hard copy printout.

2.4.4 Logs.

Detector data shall be processed by the central computer. Real-time logs shall be printed as received by the central computer while in the monitor mode. System detector logs shall be scheduled, formatted, and sent from the arterial master.

2.5 DATABASE MANAGEMENT.

2.5.1 Programming Displays.

A database management program shall exchange and update data with arterial master and intersection controller. Each arterial master and intersection controller shall have separate database programming pages. These pages shall contain all the programming options unique to each controller type.

Once database management is selected from the main menu, a sub-menu shall be presented listing the database pages available for programming. It shall be possible for the user to scroll through the data pages of a sub-menu or enter and exit a data page without waiting for data to fill the page. For example, page up and page down functions shall permit the operator to go from page 1 to 30, within 5 seconds.

All programming entries shall primarily consist of numerical values, YES/NO or ON/OFF entries. During program entry, the new data shall over-write the old data. If the data is in error, changes shall not be permitted and the user shall be alerted by either an error message on the display or a warning tone.

2.5.2 Upload/Download.

All devices shall use upload/download techniques for database programming. The arterial master shall employ an additional database programming method through direct data entry.

Upload/download shall transfer the entire programmable database from/to the arterial master or any intersection controller via the arterial master, with the exception of intersection controller preemptor and overlap configuration.

All upload/download data shall use block transfer techniques, and shall be verified by block check-sum and word parity. Non-verified data shall cause termination of the upload/download with no data transfer taking place. It shall not be possible to load erroneous interval and configuration information to the controller.

Upload techniques shall not cause the system or intersection controller to go off-line. Traffic control operation shall remain intact in all respects.

The program shall compare the database of any arterial master or intersection controller to the database on file following an upload. The compare function shall be executed by simple keyboard technique and shall identify any differences between loaded and file data. The system operator shall be able to correct, use, or substitute data values, and proceed with further comparison.

2.5.3 Backup Database.

Data from the backup files shall be read and verified for programming EEPROMs to be installed in intersection controllers and arterial masters.

2.5.4 Auto Print.

Selection to automatically print any or all arterial master or intersection controller databases that are stored in the central computer shall be provided.

Selection eliminating intersection controllers which are not in service when all intersection controllers are selected for printing shall be provided.

The system shall print only pages within a database that contain data. Pages with no user-entered data shall be skipped. If a database is selected for printing, but is not found on the central computer hard disk, it shall be noted on a separate sheet of the printout.

2.6 SECURITY.

System security at the central computer shall be ensured through three levels of access. The levels shall be as follows:

a. Supervisor
b. Data change
c. Viewer

The supervisor and data change levels shall have separate access codes that must be entered prior to making database changes.

The supervisor level shall permit access code number assignments and database changes. Data change level shall permit database changes. If an incorrect code is entered, database changes are denied. Viewer level shall not permit any database changes.

2.7 DIRECTORIES.

System and intersection directories shall include location of arterial masters and associated intersection controllers by name or number.

System directory text shall describe each of the systems. A system name may be entered and shall identify the system in menus, report titles, and arterial master database pages.

Intersection directory text shall list intersection names and telephone numbers for each associated arterial master. An intersection name may be entered and shall identify the intersection in menus, intersection displays, and intersection database pages.

The user shall assign names to the intersection controller alarm inputs. These names shall identify alarms in event reports. Each alarm name shall be twenty characters.

2.8 DATABASE BACKUP AND RESTORE.

The system shall include an option for making backup copies on diskettes of the database files contained in the central computer. All files required to restore the system to operation without the need to re-enter data shall be included on the backup diskette.

The central computer's files containing records of event and buffeted data shall be saved on hard disk when received from the arterial master. Provision for transferring computer files to storage diskettes shall be included. After transfer to storage diskette, monitor files shall be removed from the hard disk by a user selected command. Storage diskette files shall allow for data analysis by the same report programs used for files on hard disk.

2.9 SOFTWARE MAINTENANCE AGREEMENTS.

The software agreement for licensing to the Department shall be in force upon the acceptance by the vendor to supply equipment and software to the Department either by purchase order or construction project.

2.9.1 Performance.

The vendor shall warrant that the software will perform according to the specifications.

2.9.2 CPU Limitations.

The vendor shall agree that it will be the Department's option to use the software on upgraded equipment at any time and use the software on backup equipment for a limited time. The limits of use shall be as previously stated.

Backup Provisions.

The vendor shall agree that the Department will utilize off-site storage for the software and backup files. Copies of these files shall be made by the Department as needed within the operational guidelines previously stated.

2.9.4 Operational Restrictions.

The vendor shall agree that the Department will utilize the software to monitor any system within the Department's responsibility.

2.9.5 Maintenance Standards.

The vendor shall agree to supply the Department with updates to the software. If the updates require upgrading of the Department's equipment, the vendor will provide the source codes to the Department for the version of software provided to the Department.

2.9.6 Source Code.

The vendor shall deliver the source code and documentation to the Department to be used in the event of failure to provide support to the software. A viable holding arrangement will be considered as an alternate method for source code to be delivered to the Department at no cost to the Department. This option shall be stated on the order, plans, or other purchase agreements for the controllers, otherwise will not be required.

3.0 SYSTEM COMMUNICATIONS.

The controller unit shall communicate with a system master controller, central computer (for isolated intersections), or portable computer connected directly to the controller. Internal settings, including coordination, shall be accessible via an external Hayes compatible modem through the RS-232 interface. The controller unit shall receive system master commands and data transmissions. In addition, it shall transmit the controller unit status, database, and system detector information to the system master. All alarms provided shall be accessible through the RS-232 port by remote interrogation and by automatic dialing initiated by the controller unit.

3.1 SYSTEM COMMANDS.

The communication shall allow the controller unit to receive, as a minimum, the following commands:

a. The coordination pattern (selects the cycle, offset, and split)
b. Time of day and date
c. Special function commands (minimum of four)
d. Free and flash mode command patterns
e. Control of the local system on a specified master controller
f. Request for local status

3.2 STATUS DATA.

The status of each of the following functions shall be transmitted from each controller in response to a status request from any monitoring device:

a. Green and yellow status for all phases and overlaps
b. Walk and pedestrian clearance status for all phases
c. Vehicle and pedestrian detector status (8 pedestrian and 64 vehicle detectors)
d. Phase termination status
e. Local Cycle time
f. Coordination status
g. Conflict flash status
h. Local flash status
i. Preempt activity and calls
j. Volume and occupancy data from a minimum of 16 system detectors
k. Status of four user-defined alarms
l. Zone map display data

3.3 UPLOAD/DOWNLOAD.

The communication shall provide the capability to upload/download the entire intersection data base to/from a monitoring personal computer. When desired, only a single screen of data can be sent and received from the intersection.

3.4 OPERATION.

Communication shall operate from communication ports on the front of the controller. The controller unit shall communicate with a system master/secondary controller, central computer, portable computer and/or the conflict monitor with RS-232 serial ports accessible through DB-25S connectors. The reserve connector pin assignments shall be as follows:

Pin #	Designation
1	Frame Ground
2	Transmit Data
3	Receive Data
4	Request to Send
5	Clear to Send
6	Data Set Ready
7	Signal Ground
8	Data Carrier Detect
20	Data Terminal Ready
22	Ring Indicator

The baud rate of each port shall be keyboard selectable for any one of the following rates: 600, 1200, 2400, 4800, 9600, 14.4K, 19.2K, 28.8K, 33K, and 57.6K. The port shall be configured for an eight (8) bit word, one (1) start, one (1) stop bit and no parity.

The communication path shall use a twisted pair of wires. These may be leased lines (Type 3002, voice grade, unconditioned), radio modem, or dedicated cable.

Communication timers shall be programmable from 0 to 9.9 seconds.

The controller unit shall be programmable via keyboard with a user assigned, unique address identifying the master and intersection.

3.5 INTRA-SYSTEM COMMUNICATIONS.

Intra-system communication shall be achieved through one of the four RS-232 serial ports defined herein and an external modem. The modem shall not be provided with order unless specified elsewhere.

3.6 RADIO SYSTEM COMMUNICATION (Inter-system) - (WHEN SPECIFIED).

The data radio modem system is for microprocessor based control equipment. The modem is external to any other equipment in the controller cabinet and at the terminus and shall be provided for data transmission and indicated on the plans. The modem shall provide half or full duplex communications. The modem shall connect directly to the controller in accordance with these standards for the auto dial modem stated above.

The Department will provide the necessary management to obtain a study for interference on the above mentioned radio frequencies, coordinate the frequency to be used, and apply for licensing to use the frequency. The equipment shall operate at the assigned frequency and the supplier/contractor shall make the necessary adjustments for correct operation.

3.6.1 Radio Modem.

The modem shall meet the environmental requirements of NEMA TS-2 TYPE 2 and be a maximum dimension of 4 inches high x 12 inches wide x 12 inches deep. Indicators shall be provided on the front of the modem indicating carrier detect, transmit data, and receive data. The following shall be the operating characteristic of the modem:

TABLE 18A-2

RADIO MODEM CHARACTERISTICS

FUNCTION	CHARACTERISTIC
Frequency Range:	173 MHz or 940 MHz range (Capable of: 138-174 MHz, 406-430 MHz, 450-475 MHz, 928-960 MHz).
Temperature Range:	-30° to +60° C.
Operating Voltage:	120/240 VAC
Transmission Mode:	16F3, 16F9, 15F2
Modulation: (Receive and Transmit)	FSK, Frequencies, 2100 Hz - mark, 1300 Hz - space.
RF connector:	Type N Female
Data connector:	RS-232-C, 9-pin
Sensitivity:	-107 dbm (1.0μV) for BER_1x10^{-3} over the voltage and temperature range.
Decoder type:	PLL FSK Demodulator
Carrier Attack Time:	_ 10mS
Turn Around Time:	10mS Maximum
Power Output:	2 watts extendable to 20 watts, 100% duty cycle.
Frequency Stability:	±5 ppm on all frequencies.
Harmonic Distortion:	5 % Maximum
Compliances:	FCC Part 15, EIA RS-316B, and RS-232-C, as applicable.

3.6.2 Antenna.

The antenna shall be connected to the modem by transmission cable meeting the Department standards. The antenna shall be a directional Yagi with a minimum of 9 Db gain and five elements. The mounting shall adapt to a 1-1/2 or 2 inch mount.

3.6.3 Antenna Tower.

The contractor (for projects) shall provide a tower for mounting the antenna at the site as shown on the plans. The height of the tower shall be determined from the frequency coordination study. The tower shall be erected in accordance with the AASHTO standards.

Central Office Radio Terminal.

Additional labor shall be provided by the project contractor to install the antenna on the Department's tower, the cable from the antenna to the modem, and the necessary hardware to complete the installation as designated on the plans and in accordance with good engineering practices. The radio modem and auto-dial modem shall be installed in a single 19 inch rack mounting system or on a wall mountable shelf. Mounting equipment and hardware shall be provided by the contractor. The Department will supply one RJ-11C jack for the dial modem and the necessary 120 VAC outlet for the equipment adjacent to the installation as designated by the Department.

The installation shall include lightning protection on the incoming RF cable in accordance with good engineering practices.

3.6.5 Telephone Terminal Boards (For information purposes only).

The following equipment will be installed into the existing PBX equipment for telephone lines needed to implement the system communication. All other equipment specified shall work with this equipment to complete the system's communications. This equipment will be installed in and manufactured by Rolm Telecommunication Company.

TABLE 18A-3
TELEPHONE TERMINAL EQUIPMENT

TYPE EQUIPMENT	MODEL
16-channel coder	#8551E
16-channel decoder	#8552A
8 channel line interface	#85540A

This equipment will be installed by the Department and made ready for the completion of the system.

4.0 SYSTEM MASTER CAPABILITIES

4.1 DESIGN REQUIREMENTS.

The system master shall be a microcomputer device that shall control and supervise a minimum system of twenty intersection controllers. It shall provide the communications link between the central computer and each of the intersection controllers within the system. The system master shall be assigned a unique identification number for communications on the same link with other system masters. An optional method for providing system master operation is to include the master operation as part of the software within the secondary controller. This option shall require the operation of the traffic signal control and system master without interference between them. Priority shall be given to the traffic signal control and operation as defined in this section.

Each master shall generate system commands to its associated intersection controllers, either in response to prevailing traffic conditions analyzed by system master using detectors information or by time-of-day scheduling, external command inputs, or manual inputs.

The central plans shall be constructed with the following minimum options:

a. 48 patterns with a unique cycle length per pattern
b. From one to four offsets per pattern
c. Selection of one split per pattern from a table of 24 programmable splits
d. Selection of one sequence per pattern from a table of 16 programmable sequences.
e. Pattern 254 (NTCIP) causes the intersection to operate in free.
f. Pattern 255 (NTCIP) causes the intersection to flash as programmed internally

The reference point for all cycles shall be programmable by the user. Normally it is initialized to midnight.

A minimum of 48 patterns will be provided. Each pattern can make all the selections as defined in Section 3.5 of the NTCIP NEMA protocol.

The system master shall monitor the operation of all the associated intersection controllers, communication paths, local detectors, and system detectors. User programmable reporting alarms shall initiate failure reports to the designated terminals from a list of user identification numbers. A minimum of four terminals shall be assignable.

System master shall provide:

a. Traffic Plan Selection
b. Crossing Arterial Synchronization
c. Diagnostics
d. Events
e. Logs
f. Reports
g. Data Entry

Alternative crossing arterial synchronization shall be accomplished by using the master synchronization reference point. The operating cycles having the same cycle length will be referenced to the same point. An additional interface method shall be used to operate both arteries on the same cycle length. Associated system control shall also be included for mutual coordination.

4.2 TRAFFIC PLAN SELECTION.

The traffic plan shall be selected on a priority basis. The priority order shall begin with the highest being:

a. Manual commands
   b. Central System commands
   c. Time-of-day/day-of-week/week-of-year scheduled commands
   d. Traffic responsive commands.

4.2.1 Traffic Responsive Operation.

Traffic plans shall be automatically selected in response to real-time system detector input data. These commands shall be transmitted to, received and implemented by the intersection controllers within the master's system.

A minimum of 48 system detector inputs shall be provided and each, if selected, shall be processed into scaled values used for volume, density, and occupancy data. The volume and occupancy scale factors shall be user-specified and programmable through the keyboard into the master for each detector; otherwise a default value of zero shall be entered. Each detector shall be user-programmable as one of two directions or crossing direction.

Detector data shall be processed to provide a value representing traffic conditions for each function. The process shall include:

a. Data computations resulting in values accurately representing vehicle volume (vehicle/hour), occupancy (time detected), and density (vehicle/mile).
b. Comparison of computed values determining the relative volume and density for traffic conditions detected and assigned to directions as stated above.
c. Accumulation of detection values over a user programmable time interval, evenly divided into a minimum of ten sampling periods, shall provide smooth transitions into selected programs designed by the Department to progress traffic through the system. Functional requirement for this process is to select a cycle, offset, and split from user specified values of detector data.
d. User-specified adjustment factors for each function shall be used to make the detector data be within 50 to 100 percent of selected vehicle density characteristic.

Function values shall be compared to user-specified threshold values for traffic plan selection. Plan selections shall not oscillate between plans which have numerically close values. A method of hysteresis shall be used to prevent oscillation.

Ranges for six traffic volume and occupancy levels shall be programmable and used for comparing the master's computed volume and occupancy level from the overall detector data. Level one shall be associated with light traffic with no coordination and level six shall be associated with heavy traffic. Twelve programmable thresholds shall be provided for the master's comparison values to implement plan selection based upon its computed values.

Arterial directional preference shall be determined by computing directional detector data. The magnitude of the difference and directional preference shall be compared to user programmed threshold values to select and implement directional or average offsets.

Split selection shall be based on user assigned system or phase detector data. Programmable weighing of each detector data, as stated above, shall be used by the master for computing each detector adjusted data. The master shall implement the appropriate split by comparing the main street and cross street data. Programmable values shall be used for selecting four levels of increasing values and four levels of decreasing values. If an error condition is detected, the selection shall default to average or user specified value.

Based on the master's computed detector data levels, a user-specified traffic plan shall be selected as the traffic responsive plan. If computed level or computed offset cannot be determined because of detector failures, a default plan shall be implemented from TOD plan or from TBC.

Each traffic plan contains a programmed split command for that plan. Alternately, it shall be possible to select splits and special function commands for user-specified plans based on split demand function values. Four split/special function combinations shall be available.

4.2.2 Time-Of-Day/Day-Of-Week/Week-Of-Year Schedule.

Time-of-day scheduling shall be controlled by an internal clock, accurate to the power line frequency. In the event of a power failure, the clock shall be maintained for a minimum of 72 hours. Leap year shall be automatically compensated for and daylight savings time shall be programmable for date of occurrence. A minimum of 24 user-defined programs shall operate on a daily, weekly, and yearly basis.

TOD programming shall follow Section 3.5 of the NEMA NTCIP specifications.

Programmable entries shall include:

a. Day-program assignment
b. Start time
c. Traffic pattern (cycle, offset, split, special functions, free, plan command)
d. Traffic responsive plan enable
e. Traffic responsive plan override of TOD
f. Sample period interval
g. Sample period log interval
h. Detector log interval

The arterial master shall update time and date in all intersection controllers in a system a minimum of once every hour.

The arterial master shall include a time comparison feature. This feature shall indicate the need to update the master clock after being compared with the reference clock in the central

personal computer. It would be preferred to enable a clock reset from the central computer to update the master clock with the time from the central computer.

4.2.3 External Commands.

External commands shall be received from a remote source such as another arterial master. These control signals shall be used to initiate an external plan. Alternatively, the external command inputs shall be used for crossing arterial synchronization. External commands shall override TOD and traffic responsive operation.

4.2.4 Manual Entry.

Manual entry from the front panel keyboard or a remote source shall provide the highest priority of plan selection. It shall be the default program if traffic responsive operation fails and a TOD plan is not specified.

4.2.5 Pattern Mode Entry (Test Command).

Mode commands shall allow selection of any defined pattern. Intersection controllers may contain the same or different programs which shall allow sub-system coordination or independent operation under time-base control.

4.3 DIAGNOSTICS.

Diagnostic tests shall be continuous checks performed on system detector data, communications, and communication connected devices. Detected faults shall produce event failures at the arterial master and the central computer.

Failures shall be displayed on the arterial master. A fault isolation routine, selected from the front panel keyboard, shall identify the failed device. The operator shall have the ability to display all fault conditions on command.

4.3.1 Power Fail Restart.

Following a power interruption, the arterial master shall update the clock and bring itself on-line automatically and gain control of the system.

4.3.2 Device Event Reports.

If operating in a system, diagnostic failures shall be reported to the central computer as events. The following devices shall be monitored:

a. Communication
b. Local intersection controllers
c. System detectors
d. Local detectors

Report events shall verify system master and local intersection controller responses. Communication tests can be a specific test or results from normal evaluation during operation and shall be as follows:

a. System Master Test - A system master test failure shall occur when the master does not respond to central computer commands. If a response is received within three seconds following a failure, the failure condition shall automatically clear, restoring system master/computer service.

b. Local Intersection Controller Communication Test - A local intersection controller communication failure shall occur when valid data is not received by the master for five seconds. If data is received within five seconds following a local intersection controller communication failure, the failure condition shall automatically clear, restoring local intersection controller communications.

Local intersection controller events shall indicate CMU flash, local and commanded flash, cycle fail, coordination alarm, local and commanded free, coordination error, preempt, and user-designated events:

a. CMU flash - If intersection controller status indicates CMU flash for a period in excess of a user-programmable period of 0-30 seconds, the intersection controller shall fail and a CMU flash event shall be recorded.
b. Local Flash - If intersection controller status indicates CMU flash is OFF and flash is not commanded from the arterial master, the intersection controller shall be considered off-line and a local flash event shall be recorded.
c. Commanded Flash - If intersection controller status indicates flash, CMU flash is OFF, and flash is commanded from the arterial master, the intersection controller shall be considered off-line and a commanded flash event shall be recorded.
d. Cycle Fail - If intersection controller status remains in the same phase with opposing phase calls for two cycles during coordination or three minutes if the system is free, the intersection controller shall be failed and a cycle fail event shall be recorded.
e. Coordination Event - If intersection controller status indicates a coordination alarm condition, the intersection controller shall be failed and a coordination event condition shall be recorded.
f. Local Free - If intersection controller status indicates a free condition and free is not commanded from the arterial master, the intersection controller shall be considered off-line and a local free event shall be recorded.
g. Commanded Free - If intersection controller status indicates a free condition and free is commanded from the arterial master, the intersection controller shall be considered off-line and a commanded free event shall be recorded.

h. Coordination Error - If intersection controller status indicates a coordination error condition, the intersection controller shall be considered off-line and a coordination error event shall be recorded.

I. Preempt - If intersection controller status indicates a preempt condition, the intersection controller shall be considered off-line and a preempt event shall be recorded.

j. Event 1/Event 2 - If intersection controller status indicates an event 1 or event 2 condition, the intersection controller shall feed back user-designated alarm information and an event 1 or event 2 shall be recorded.

4.3.3 Detector Diagnostics.

System detector diagnostics shall check for maximum presence, minimum presence, excessive counts, and no activity. If a system detector is diagnosed as failed or in error, then data supplied by that device shall be automatically eliminated from system computations.

Local detectors shall be checked for maximum presence and no activity only.

Detector diagnostics shall be performed each minute. Diagnostic periods shall vary depending on the diagnostic test.

Maximum presence events shall be generated by a continuous detector call during a user-specified diagnostic period. The diagnostic period shall be user-selected from 0-30 minutes.

Excessive count events shall be generated if a detector volume count is greater than or equal to a user-specified excessive count threshold. The diagnostic period shall be user-selected from 0-30 minutes.

No activity events shall be generated if vehicle counts are not received during a user-specified diagnostic period. The diagnostic period shall be user-selected from 0-255 minutes.

Detectors shall be failed when its operation is not within the specified criteria. A detector that begins functioning within the specified limits shall be returned to a non-failed status and its input used by the controller.

4.4 MONITOR EVENTS.

Status changes and operating failure events at any intersection controller or arterial master shall be recorded by the arterial master at the time of failure or event occurrence. Events shall be reported to the central computer on a priority basis.

Reporting priority shall be selected by event or failure. It shall be programmable as: immediate, report with higher priority, or not at all.

Two telephone number entries shall be programmable from the central computer for reporting events to central computer and for reporting device failures to another maintenance

computer or terminal. Device failure reports shall be transmitted to the designated computer or terminal only when scheduled by a TOD entry.

If the central computer is busy or off-line, a reporting arterial master shall repeatedly attempt to call at a preset retry interval in the range of 3 - 15 minutes.

Reporting shall be selected for directing all events to a central computer and maintenance computer or terminal when this capability is selected. Printed events shall consist of the following categories:

a. Program and TOD changes
b. System events
c. Device diagnostics

4.4.1 Program and TOD Changes.

Program and mode changes shall occur automatically as a result of traffic responsive plan computations, TOD scheduling, external, and manual commands. Program and mode event changes shall include the following:

a. In-effect program change
b. Traffic responsive program change
c. Special function change
d. Time-of-day interval change
e. Controller command TOD change

4.4.2 System Events.

System events shall be arterial master self diagnostics. The diagnostic messages shall include:

a. Power-off (Comm-failure)
b. Power-on (Comm-failure)
c. Power interrupt
d. Clock error
e. Backup

Power-off event shall be stored in memory and reported when power is restored.

Power-on event shall report the time and date that power is restored. Time and date information shall be accurate if power is off less than 72 hours.

Power interrupt event shall report when power was off for less than one second.

Clock error event shall report when time and date information is different from the central computer reference. This event shall automatically occur whenever power was off

greater than 72 hours. A clock error event shall inhibit TOD operation and scheduled reports until the clock has been reset and is functioning correctly.

Backup event shall indicate a data change in the arterial master memory. All memory shall be automatically re-initialized with a backup data base to allow continued operation.

4.4.3 Device Diagnostics.

All device diagnostic failures shall be reported as events. Refer to Section 4.3 for diagnostic descriptions.

4.5 REAL-TIME DETECTOR LOGS.

Real-time logs shall provide the operator with a permanent record of system detector data. Real-time logs shall consist of the following categories:

a. System detector log
b. Sample period log

4.5.1 System Detector Log.

System detector logs shall show actual volume, and occupancy for user-specified system detectors. Volume shall be the number of vehicle counts accumulated, while occupancy shall be the actual percentage of time that vehicle presence was detected during a 15-minute log period.

Detector data intervals shall be user-specified by TOD scheduling. The user shall be capable of enabling and disabling the real-time log without affecting previous entries. At the end of the interval, the arterial master reports the log to the central computer for printing. The log shall not be stored on hard disk.

4.5.2 Sample Period Log.

Sample period logs shall show computed parameters used in determining the traffic responsive plan selection. The sample period log interval shall be user-specified as a multiple from 1-6 sample periods by TOD scheduling.

If the default log period is programmed to be zero, the sample period log shall be reported when there is a change in the computed traffic responsive program. The user shall be capable of enabling and disabling sample period logs without affecting previous entries. The sample period log is reported to the central computer for printing. The log shall not be stored on hard disk. The sample period log shall consist of the following:

a. Scaled volume and occupancy for enabled system detectors
b. Scaled volume and occupancy for detector groups with assigned detectors
c. Current value of each program selection function
d. Smoothed value of each program selection function

e. Computed program selection values
f. Selected traffic responsive plan program
g. In-effect program and cycle length

Additionally, the printout shall identify groups that have not been assigned and parameters containing errors.

4.6 STATUS REPORTS.

Manually commanded status reports shall be provided to allow the operator at the central computer an immediate record of system operations. Reports shall consist of the following categories:

a. System status
b. Controller failure summary
c. System detector failure summary
d. Current 15-minute system detector log

4.6.1 System Status.

System status report shall describe the system operating conditions. The report shall be a concise printout including the following:

a. Traffic responsive program (computed values)
b. Traffic responsive plan
c. Program-in-effect and source
d. Special function status
e. Communication status:
   1. System master communication failure
   2. Local intersection controller communication failure
f. Intersection controller status:
   1. On-line
   2. Off-line
   3. Failed
g. System detector status:
   1. On-line
   2. Failed
h. Local detector status:
   1. Failed

Local detectors shall be identified by intersection controller number and assigned phase. Intersection controller off-line shall indicate a disabled intersection controller or a non-coordinated intersection controller due to the following conditions: preemption, coordination error, local free, commanded flash, or local flash.

4.6.2 Intersection Controller Failure Summary.

Intersection controller failure summary shall identify failed intersection controller(s) and probable cause(s). Probable failure causes shall be as follows:

a. Communication
b. Cycle failure
c. CMU flash
d. Coordination alarm

4.6.3 System Detector Failure Summary.

System detector failure summary shall identify failed system detector(s) and probable cause(s). The possible failure causes shall be as follows:

a. Communication
b. No activity
c. Maximum presence
d. Excessive counts

4.6.4 Current Detector Log.

Current detector log shall show actual volume and occupancy recorded during the last log period. Volume shall be the number of vehicle counts accumulated while occupancy shall be the actual percentage of time a vehicle presence was detected. This data shall be indicated per detector.

4.6.5 Stored Events.

Stored events shall be a report of the last events stored in the arterial master (up to 255). These events shall be printed in the order recorded. If the event storage memory becomes full, the newest event over-writes the oldest event.

5.0 COORDINATION/SYSTEM OPERATION COMMANDS.

The controller unit shall provide coordination functions to control intersection cycle lengths, system offset relationships, and phase split timing. The coordinator shall perform these functions by internally manipulating the appropriate controller unit inputs. The controller unit shall be programmable for selecting these functions as output during all modes of coordination, controller unit designated as master, secondary or isolated.

Coordination functions shall be provided as a standard controller unit feature. These functions shall be included in the equipment and software provided. Hardwired inputs and outputs for coordination functions shall be through isolation relays, specified elsewhere, and shall be binaurally encoded on the respective cycle and split input lines. The voltage on the hardwired interconnect shall be 120VAC. The input lines shall have no active inputs for cycle

one and split one. Cycle four and split four shall be activated by both the cycle two and three or splits two and three inputs being active respectively. Offsets one through three shall be only activated one at a time by the synchronization pulse being superimposed upon active line. The offset line shall operate by using a continuous high (120VAC) interrupted by a low for three seconds at the coordination point. Only one offset line shall be operated at a time. The remainder of the required system operations is not required to operate within a hardwired system.

Alternate methods to the cycle-split concept of coordination shall be evaluated based upon providing programmable time distribution to control vehicle movements within system parameters for traffic progression. A minimum of sixteen "programs" of the alternate method shall be provided and controlled by the inputs specified and shall meet the requirements for coordination.

5.1 TRANSITION CYCLES.

The controller unit shall provide a smooth and orderly transition during operational changes in both free and coordinated operations. No skipping of through movement phases shall be allowed when changing a sequence from a lead-lag to a lag-lead.

5.1.1 Free to Coordinated Transition.

During the free to coordinated transition, the controller unit shall complete a pick-up cycle before entering the coordinated mode. The pick-up cycle shall begin upon receipt of a sync pulse and a valid coordination command. During the pick-up cycle, the coordinator shall service all non-coordinated phase calls in normal sequence until entering the coordinated phase(s).

5.1.2 Coordination Command Transfer.

The coordination command shall contain the system cycle, offset, and split. Command changes shall be implemented concurrent with a sync pulse. The cycle and split command shall take effect when the local zero point of the existing cycle is reached. Command transfers shall not stop the sequencing of the phases during the change except as noted elsewhere in this standard.

5.2 CYCLE.

The coordinator shall provide five cycles. Each cycle shall have a minimum programmable cycle length from 10-255 seconds, in 1-second increments.

5.2.1 Synchronization.

Coordination timing shall be synchronized to the leading edge of the system sync pulse (master zero). This point shall serve as the reference for all offset timing.

5.2.2 Sync Monitor.

The coordinator shall check for the proper occurrence of the system sync pulse, once each cycle. If a sync pulse does not occur, the coordinator shall self-sync and continue to operate with the last set of coordination commands.

Self-synchronization shall continue for a minimum of two cycles. If a sync pulse does not occur within the self sync period, the coordinator shall revert to the non-interconnected coordination mode.

5.2.3 Hardwired Interconnect.

The controller shall provide for external inputs to be used for coordination. These inputs shall be connected to the wiring for the special connector described elsewhere in this standard. The functions shall meet the requirements as defined in section 5.0.

5.3 OFFSET.

The coordinator shall provide a minimum of one offset per pattern. Each offset shall be programmable within the cycle in 1-second increments from 30 to 254 seconds.

The offset shall be defined as seconds from the beginning of the master cycle counter to the beginning of the local cycle counter. When entering splits according to the NTCIP format, it shall be possible to select that the coordinated phase begins with the local zero point or ends with the local zero point. Time of day will be used to sync the master cycle counter within the local controller. The master cycle count shall be seconds past the programmed reference, modulo of the current selected cycle length.

5.3.1 Offset Correction.

The coordinator shall provide offset correction through the following methods:

a. Shortway offset seeking
b. Dwell

5.3.2 Shortway Offset Seeking.

Shortway seeking shall establish an offset within the shortest number of cycles by either lengthening or shortening the cycle length. The method provided by the manufacturer shall continue sequencing the phases until the programmed offset is established and shall be limited to a maximum of four cycle lengths. Any method that causes the controller to lose coordination or force to dwell and require the coordination to begin a second re-sync routine will not be acceptable.

Offset changes shall be accomplished by lengthening only if the reduction of the current cycle length is shorter than the sum of the controller unit's minimum vehicle interval lengths. In addition, all offset corrections shall be programmable to be lengthened only.

5.3.3 Dwell.

The controller shall dwell in the coordinated phase if this method of offset seeking is selected. The sequence will begin in the first cycle after the offset is established and within the programmed permissive and force-off parameters for that cycle.

5.4 SPLIT.

The controller unit shall provide three splits for each cycle. Each split shall provide a split interval for each phase of the controller unit. Each split interval shall be programmable in seconds within the cycle length timing in 1 second increments.

5.4.1 Split Intervals.

Split interval settings shall determine the maximum time, including vehicle clearance (yellow and red) for a non-coordinated phase, or minimum time for a coordinated phase during the cycle. These times shall be controlled by establishing a force-off point for each phase within the cycle. Force-off points shall be determined from the phase timing values and split interval settings. Force-offs shall meet NEMA requirements and continue to be applied until the phase is terminated.

5.4.2 Coordinated Phase Split Extension.

During coordination, an option shall be programmable to operate the coordinated phase(s) as actuated or non-actuated. If the coordinated phase is actuated, vehicle detections shall permit the coordinator to extend a phase beyond the normal yield point. Extended coordinated phase green shall be selected in seconds or terminated by a force-off setting for that phase. Selection of the CNA I and/or II operation per cycle will meet the non-actuated operation with the selected phase remaining green until the programmed force-off for that phase is reached.

5.5 PERMISSIVE PERIODS.

Permissive periods shall be timed in seconds within the cycle length and provided for each cycle or program to control the time period when the coordinated phase is released to service calls on the non-coordinated phases.

5.5.1. Yield Point.

The yield point shall be defined as the point within the cycle when the hold input is released on the coordinated phase and the controller unit is allowed to service calls on non-coordinated phases. A force-off point shall be applied at the time the hold is released, unless a force-off has been programmed for this phase.

The yield point shall begin from the coordinated phase split interval and pedestrian clearance plus vehicle clearance time. The coordinated phase pedestrian clearance period shall always begin at the yield point regardless of calls on the non-coordinated phases.

5.5.2 Permissive Periods.

All permissive period timing shall begin at the yield point. A minimum of three programmable permissive periods shall be provided. The vehicle portion of each permissive period shall be a programmable timed interval within the cycle length. An automatic pedestrian permissive period shall be allowed for phases following the coordinated phase(s). Each permissive period shall be programmable for selecting phases that would operate during this period. This function shall operate as follows:

a. During the first permissive period, the controller unit shall answer only vehicle or pedestrian calls on the phase(s) following the coordinated phase in the programmed sequence. If the controller unit yields to a call during this period and the all remaining phases are allowed during this period, then other permissive periods shall be inhibited. All remaining calls shall be served in programmed sequence.
b. The second and third permissive periods shall be programmable for beginning and ending after the yield point. During each permissive period the controller unit shall answer calls on each period's programmed phase(s).
c. An alternate method for the permissive period operation described above will be considered. The principle guide lines for controlling phase time shall be followed.

5.5.3 Single Permissive Period.

Single permissive period shall become operational by eliminating the second and third permissive periods as described above. This single permissive period shall be similar to the first permissive period, except that the controller unit shall answer calls on any phase in order of the programmed sequence during the permissive period.

5.6 CYCLE PROGRAMMING.

In addition to cycle length, offsets and splits, the following functions shall be programmable on a per cycle basis. Alternate methods of function selection shall be controlled by cycle, split, and offset inputs.

5.6.1 Coordinated Phases.

Coordinated phases shall be selected for each cycle. If the coordinated phase assignments are changed when transferring between cycles, the coordinator may operate in the free mode until completing a pick-up cycle.

The coordinated phases shall normally operate in the non-actuated mode during coordination. However, it shall be possible to select the coordinated phases to remain in the actuated mode (see Section 5.4.2).

5.6.2 Phase Sequence.

The controller unit shall normally use a standard quad phase sequence. The controller shall be programmable to select the phase sequence by selecting cycle and split. The phase sequencing shall be selected from the sequences specified previously. The free mode phase sequence shall be programmable from the keyboard and not restricted to be one of the coordinated sequences.

5.6.3 Phase Omit.

Phase omit(s) shall be selected during each cycle or program. Additionally, a phase shall be omitted if its split interval value, for the current split, is zero.

5.7 CROSSING ARTERY CONTROL.

The coordinator shall be programmable for crossing artery synchronization by implementing dual coordinated phases at an intersection(s). The coordinator shall be programmable for two coordinated phases in a ring assignable to primary or secondary coordination. Phase(s) shall assigned to a secondary coordinator shall time the green of the phase until the force off occurs or shall be controlled by call to non-actuated operation.

In addition, the coordinator shall output a crossing artery sync pulse indicating the beginning of the crossing artery phase split interval. This signal shall be used to establish the master zero for the crossing artery system master.

Dual coordination shall also force a selected crossing artery split to be used. This feature shall optimize a particular split in each cycle for dual coordination.

See Section 5.0 for alternate coordination methods and additional artery control.

5.8 FREE.

The coordinator shall provide a free mode of operation. During this mode, all coordination control shall be removed from the controller unit.

Free mode shall be selected by coordination commands, external input, or keyboard entry. Additionally, the coordinator shall revert to free mode when active controller unit inputs, or functions, would interfere with coordination. These inputs or functions shall include the following:

a. Manual Control Enable
b. Stop Time
c. Automatic Flash
d. Preemption

5.9 MANUAL CONTROL.

The controller unit shall allow entry of manual override commands from the keyboard. Manual commands shall permit individual selection of any cycle, any offset, any split or selection of the complete coordination command. When a manual cycle is selected, the sync pulse shall be generated by the time based control section of the controller unit.

5.10 PROGRAM CONTROL.

The alternate method of coordination shall provide manual control that shall select 1 of 16 programs (see Section 6.2.3).

5.11 MODES OF INTERCONNECT.

The coordinator shall be capable of operating with any of the following interconnect types:

a. Internal Time Based Coordination
b. Telemetry
c. Hardwired

The non-interconnected coordination mode shall also serve as a backup mode to communication or hardwired interconnect (see Section 5.1.2).

The coordinator shall be compatible with electromechanical pre-timed interconnect which provides the sync pulse superimposed on the offset lines.

5.12 MASTER COORDINATOR.

The coordinator shall output the coordination commands, including sync. This feature shall permit the controller unit to be used as a time-of-day master in a hardwired electromechanical pre-timed interconnected system. This feature shall be included in all controllers and shall not have restricted use.

6.0 TIME-BASED CONTROL/NON-INTERCONNECTED COORDINATION.

The controller unit shall include time based control. This capability shall be a standard feature and shall include the additional modules and/or software.

6.1 CLOCK/CALENDAR.

The controller unit shall provide a time-of-day (TOD)/99 year clock. The clock shall be programmed for current time (hour, minute, and second), date (month, day, and year), day of week, and week of year. This clock shall be used for all time based control functions.

6.1.1 Clock Accuracy.

The TOD clock shall use the power line frequency as a time base. When power is removed, the time shall be maintained by a crystal oscillator.

The oscillator shall maintain the time to within + 0.005%, as compared to the Universal Mean Coordinated Time Standard. This accuracy shall be maintained over the NEMA Standard temperature range regardless of the number or rate of power failures.

The controller unit shall maintain the TOD clock during power outages for a minimum of 48 hours.

6.1.2 Time and Date Entry.

Time and date information shall be entered in the controller unit through the following methods:

a. The controller unit keyboard
b. Computer via RS-232 port
c. Updated via system communications

6.1.3 Leap Year and Daylight Savings Time.

The TOD clock shall automatically compensate for leap year changes. Daylight savings time changes shall be programmable to occur on a selected week or be omitted if not programmed.

6.2 TIME BASED CONTROL.

6.2.1 Program Format.

Time based control shall utilize a yearly program format. The program shall select from a minimum of 60 programs with cycle, offset, and split operations assignable to a day, days of the week, weekend or any one of, selection of more than one or all 52 weeks in the year.

6.2.2 Holidays.

There shall be a minimum of 35 holiday or exception-day programs. Each holiday-program shall be assignable to occur on a specific month and day. Holiday-programs shall override the current day-program.

Each holiday-program shall be selected to repeat the following year.

6.2.3 Program Selection.

Each program shall permit selection of the following functions:

a. Day program assignment, (Month/Week/Day)
b. Start time, (Hour/Min/Sec)
c. Program, (Cycle/Offset/Split)
d. Control of a minimum of four Special Function outputs
e. Flash
f. Max 1 or 2
g. Free
h. Phase sequence

The cycle/offset/split/sequence or free commands, selected by a program step, shall serve as the coordination program only when the controller unit is operating as a TOD master or operating with time based coordination.

Remaining program step functions shall take effect immediately when the program step becomes active.

6.2.4 Manual Program Selection.

It shall be possible to manually force any of the program steps to override the current program step. The forced step shall be entered from the keyboard and shall remain in effect until removed or until the next programmed step.

6.3 NON-INTERCONNECTED COORDINATION.

6.3.1 Re-sync Time.

When operating in the non-interconnected coordination mode, a programmable synchronization time shall be used as the beginning time for all cycles. All cycles shall be reset to zero, each day, at this time.

6.3.2 Synchronization Point.

The synchronization point will be calculated as defined in the NTCIP standard. Computing this point was described in the coordination section. Computing the synchronization point based on event changes or similar methods will not be accepted.

7.0 CONTROLLER UNIT FEATURES (Stock No; 14-06-2710; 14-06-2720)

7.1 DESIGN REQUIREMENTS.

This specifications set forth the minimum requirements for a shelf-mounted sixteen (16) phase full-actuated solid state controller unit with internal Time-Based Coordination (TBC), railroad / fire (emergency vehicle) preemption, diamond intersection operation, and closed loop master/secondary operation in a traffic signal controller assembly and cabinet assembly.

The controller unit shall meet the requirements of NEMA Standards Publication TS 2 1998 (TS 2), latest edition. Where a difference occurs, these requirements shall govern. The purchase document shall identify either a TS 2 Type 1 interface or TS 2 Type 2 interface. (Stock number for TS2 Controller Timer Unit is **14-06-2710** and TS2 Controller Timer Unit with Ethernet is **14-06-2720**).

The controller unit shall be microprocessor based with additional solid state electronics components for memory and data entry of all timing and traffic control functions described herein. The hardware provided shall meet the NEMA temperature requirements certified by an independent laboratory. A resident program shall start the controller operating when power is first applied, without a failure, providing the functionality described herein. The controller unit shall begin using each programmed data for the first occurrence of the event requiring the data and after data is loaded into memory. All units shall be capable of both master and secondary operations as described by these specifications.

The controller unit shall be shelf mountable enclosure containing electronics and hardware for processor/display, input/output interface, system communications, and power supply functions. The enclosure shall be constructed of sheet aluminum and a maximum of 15 inches wide x 10-1/2 inches high x 10 inches deep. All exterior surfaces shall be finished with a durable protective coating or anodized. Model and serial number shall be permanently attached and/or displayed on the frame of the enclosure.

The controller unit shall provide electronic circuitry to monitor the operation of the microprocessor. Processor and circuitry faults shall be detected and shall set the voltage monitor output FALSE then indicate an error message on the front panel display.

The controller unit power supply shall provide for isolation and protection against power surges, generate all regulated voltages for internal and external use, and provide power monitoring control signals. The minimum power output shall be 24 watts @ 24 VDC. Additional protection shall be designed into the power supply for radio-frequency interference filtration including a differential and common mode noise filter. Fuse protection shall be provided for the 115 VAC input and 24 VDC power output. These fuses shall be mounted on or accessible from the front of the controller without removing the panel held by fasteners requiring tools for removal.

All timing shall be referenced to the 60 Hertz input power. This reference shall control all timing of the controller unit.

A power retaining component, "super cap", shall be provided for maintaining the time-of-day clock and temporary data storage during a primary power outage. The component shall

provide sufficient voltage supply for a power interruption of forty-eight hours. Lead-acid and Ni-Cad batteries are not acceptable.

7.2 KEYBOARD.

The programming of the controller shall be accomplished using a keyboard and shall include vehicle, pedestrian, and preemptor calls during test. The keyboard shall be located on the front panel of the controller unit. The keyboard shall be socket mounted for easy maintenance.

The keyboard contacts shall be constructed to be environmentally sealed, highly resistive to oil, dust, water, and most harsh environments and have a minimum rated lifetime of one million operations per key. All keys shall provide positive tactile feel and/or sound to the user.

All keys shall be clearly labeled indicating their function. Numerical keys shall be arranged in a standard telephone pattern. Keys used for YES/NO or ON/OFF entries shall be appropriately labeled. Additionally, data entry control and cursor keys shall clearly indicate their function.

Cursor keys shall provide directional movement of the cursor to any data entry position desired. The cursor keys shall auto-repeat if depressed for longer than one second, to facilitate locating a data entry.

7.3 EEPROM DATA MODULE.

User programmed settings and intersection configuration data shall be stored in an electrically erasable programmable read only memory (EEPROM). The device shall have the ability to be reprogrammed a minimum of 1500 times. Sectional programming of the EEPROM for each data entry shall be acceptable only if the manufacture guarantees the life of the EEPROM under normal use for a period of 10 years and will be at the discretion of the Department. Designs using a battery to maintain user data entries shall not be acceptable. Additional requirements concerning data references are found in section 8.5.

7.3.1 Data Module.

To facilitate data transfer from one controller unit to another, the EEPROM device shall be mounted on a sub-module (Data Module). The Data Module shall connect to the processor/display module via a DIN type printed circuit connector.

7.3.2 Firmware.

The firmware shall be stored in a Flash ROM. The firmware (proprietary software) updates shall be accomplished by using upload/download unit connected to the controller's RS - 232 port (storage in Flash ROM). It shall not be necessary to physically replace hardware components to update the firmware. Connecting the upload/download unit to a communications port on the controller and transferring the new firmware from files on the PC to the controller's

PROM memory shall accomplish the update procedure. The components shall accept a minimum of one thousand (1000) firmware updates. The following components shall be supplied to accomplish the firmware update:

1. PC compatible software program to accomplish the transfer with a verification routine.
2. One (1) copy of instruction manual for the entire process.

The update process shall be accomplished at a transfer rate of ninety six hundred (9600) baud.

If the requirements of this section conflict with any provision of this specification (TCS 18A), the requirements of this section shall rule. No provision of this specification shall relieve the vendor of supplying a controller that meets the requirements of Section 7.3.2.

7.4 DISPLAY.

A liquid crystal display (LCD) shall be provided on the front panel of the controller unit to display programming and operational status information. The display shall be clearly readable in bright sunlight or dim artificial light without shading the display. The contrast of the display shall be adjustable. If after the Department's evaluation that this requirement is not met, backlighting shall be provided. It shall contain a minimum of four (4) lines with forty (40) alphanumeric characters per line. The display shall have an expected continuous life cycle of ten years while operating in the NEMA temperature range.

7.5 OPERATING DISPLAYS.

The display shall have two (2) modes of operation, dynamic and programming. The dynamic mode shall display operational status information, while the programming mode shall display user-programmable information. The normal display shall be either blank or a dynamic display as stated below.

7.5.1 Dynamic Displays.

The dynamic displays shall provide a visual status of the real-time controller unit operations. Data entry shall be prevented without a display indicating the location for the data and the data that will be entered in this mode. Data entry during this display is acceptable only as an extra method, not as the primary data entry method.

The dynamic displays shall be accessible via the front panel keyboard. The following status displays shall be specific to each of the major functions of the controller unit.

7.5.2 Controller Timing Displays.

The controller timing displays shall be a dynamic display that indicates ring, phase, and coordination status information. Ring status shall include phase timing, current interval and time remaining for both rings, simultaneously. Status messages shall include current vehicle and pedestrian intervals, reasons for phase termination, and Max timer in effect.

Phase status shall indicate the current phase(s) timing and which phase(s) is next to time, vehicle/pedestrian call/recall information and preemptor calls.

The coordinator status display shall indicate the command source, current cycle/offset/split, local/system cycle count, commanded/actual offset, and offset correction. This display shall provide co-ordination relationship to phase operation in real time and be a single display.

The preemptor status display shall indicate calls, preemptor active, and delay period timing. Also indicated shall be preemptor timing, the phase(s) timing while in preemption, interval, and time remaining on the interval.

The detector status display shall indicate activity for all detectors. The display shall indicate detector calls as they are processed by the controller unit.

7.5.3 Programming Displays.

The programming displays shall aid the operator to enter data from the keyboard. These displays shall be arranged in a menu format. The main menu shall allow the user to select one of the major functions of the controller unit. A sub-menu is permissible to display selection of a specific area within that function. Cursor keys shall allow the user to move up, down, left, or right through the data of the menu. Multiple data entries shall be shown at the same time to facilitate programming. It shall be possible to return to the main menu or sub-menu by a maximum of two (2) key strokes.

English language and traffic engineering terminology shall be used throughout the programming displays. Display organization and data entry method shall allow traffic engineers or technicians to program the controller unit without using reference cards or manuals. Mnemonic usage shall be minimized and limited to recognized traffic engineering terms.

All programming entries shall consist of numerical values, YES/NO, ON/OFF, TRUE/FALSE, logical 1's/0's entries. During program entry, the new data shall be displayed as it is entered from the keyboard. For quick entry of data, a repeating or copy function shall be provided. If the data is in error, the user shall be alerted by an error message on the display. Previously programmed entries shall remain until valid data is entered.

7.6 PROGRAMMING.

The programming methods shall not affect normal operation of the controller unit.

Download flexibility shall permit individual transfer of each major programmable category or the entire data base at one time.

Controller unit programming shall be accomplished by the following methods:

a. Front panel keyboard through menu access.
b. Downloading data from a LA DOTD computer with Windows software system (including lap-top) running the appropriate software and using the controller unit terminal interface directly or via a dial-up modem.
c. Data module transfer from one controller unit to another as specified in Section 7.3.

7.7 PROGRAMMING SECURITY.

A four digit code shall be user selected, and stored in EEPROM, for one level of programming security. Display features shall be available without the need to employ the access code. The controller unit shall be supplied with the codes preset to all zeros (0000).

If the access code has not been entered and a data entry attempt is made, then a prompt, requesting the access code, shall appear. Once entering the code, the screen shall revert to the previous display and data entry shall be permitted. The code shall not appear on the screen at any time. No further access code entries shall be required.

When the access code is required for data entry, the controller unit shall automatically set the locked access mode following a period of keyboard inactivity for eight minutes.

The access code shall be changeable only if the previous access code has been entered. Additionally, it shall be possible to prevent changing the access code from the keyboard.

7.8 MEMORY CLEAR.

A memory clear function from the keyboard shall not be permitted for the user to clear data entries. Default values shall be entered by the user to supersede previously programmed data.

7.9 INTERFACE CONNECTORS.

All interface connectors shall be accessible on the front of the controller unit and rigidly secured to the controller by the shell of the connector. Three MS-type connectors (A, B, C), meeting the pin assignment and interface requirements of the NEMA Standard shall be provided. A fourth connector, identified as the D connector shall be provided for auxiliary inputs and outputs as specified within this standard.

Four (4) RS232 ports shall be provided for communications with the system software, portable download/upload unit, conflict monitor and intra-system communications. These four (4) ports shall be keyboard-assignable for any of the communications functions. All four (4)

ports shall be RS-232 serial port accessible through DB-25, twenty-five pin, subminiature, dual-inline connectors. Additional ports required for closed loop secondary operation shall be supplied, if necessary to support the vendor's standard closed-loop application software. Each unit shall support all necessary communication ports for both master and secondary operation.

One SDLC port shall be provided per unit in compliance with NEMA TS-2, 1998 specifications.

All connectors shall be mounted a minimum 1-1/2 inches apart providing hand working room for comfortable installing and removing of the mating connectors.

All inputs and outputs to the controller unit shall conform to the applicable interface and environmental requirements of the NEMA Standard.

7.10 PRINTED CIRCUIT BOARDS.

All printed circuit boards shall meet, as a minimum, the requirements of the NEMA Standard. In addition, they shall also meet the following requirements:

a. All plated-through holes and circuit traces shall be plated with solder to protect exposed copper. Any wire jumpers included on circuit boards shall be placed in plated-through-holes that are specifically designed to contain them. Circuit track corrections by track cuts and jumpers that are tack soldered to circuit tracks are not acceptable.
b. Both sides of the printed circuit board shall be covered with a solder mask material.
c. The circuit reference designation for all components shall be clearly marked adjacent to the component. Pin 1 for all integrated circuit packages shall be designated on all printed circuit boards.
d. All electrical mating surfaces shall be gold-flashed.
e. All ICs, 14 pin and up, shall be installed in machine tooled grade sockets meeting these requirements. All sockets shall be AUGAT-8XX-AG11D or approved equal, meet UL specification 94V-0, be constructed with two-piece, machined contacts and close-ended to eliminate solder wicking. The outer sleeve shall be brass with tin or gold plating and tapered to allow easy IC insertion. The inner contact shall be beryllium copper sub-plated with nickel and plated with gold.

7.11 SERVICEABILITY.

The controller unit design shall use printed circuit boards that plug into an internal harness array and/or connector plug within the unit. All circuit boards shall be mounted vertically. Transformers, capacitors, and transient suppressor components are exempt from the above requirement.

The controller unit design shall allow easy removal or replacement of a circuit board. All printed circuit boards shall be keyed to prevent improper installation.

The controller unit enclosure shall be constructed to allow complete disassembly using hand or standard screwdriver operated fasteners. The unit shall be designed for adequate accessibility to troubleshoot and test one side of any circuit board while the unit is still in operation. If testing cannot be accomplished with boards in their assigned position then extender boards or cables may be used. Only one board at a time shall be required to be moved during testing.

7.12 SERVICE EQUIPMENT (to be provided when stated on order).

One set of cables and/or extender boards shall be provided with each order of ten controllers, two sets for twenty controllers, with a maximum of three sets of cable or extender boards.

One portable controller testing facility shall be provided with each order of ten controllers, two for twenty controllers, and a maximum of three for more than thirty controllers.

The testing facility shall provide switches for testing all NEMA inputs and LED's for all NEMA outputs. In addition, indicators and switches shall be provided for testing all the requirements within this standard except for the communication ports and/or RS-232 connectors.

The facility shall be contained within a weather proof enclosure, with quick release closure latches, and have a carrying handle. All harnesses shall be provided with the standard A, B, and C harnesses permanently wired within the enclosure. The additional harnesses shall be connected within the enclosure with a circular plastic connector meeting the requirements for type and pin assignment for the fourth connector installed in the cabinet. All standard NEMA functions shall be permanently labeled for each indication and switch. All additional inputs and outputs shall be identified with overlays which can be labeled identifying the function.

All servicing equipment shall be identified and documentation shall be provided which includes wiring diagrams and schematics.

8.0 ACTUATED CONTROL.

The controller unit shall provide the actuated control functions and operations required by Sections 2, 13 and 14 of the NEMA Standard. In addition, it shall provide the features described in the following paragraphs.

8.1 PHASE SEQUENCE.

The phase sequence of the controller unit shall be programmable in any combination of sixteen phases to achieve phase reversal individually or by pairs, one to four independent or concurrent timing rings, multiple rings allowing selection of four-phase operated as a concurrent group, or coordination of two rings and one sequential ring divided by one barrier. Sequencing

shall be selected by cycle program or timing plan. Selection of the required sequences shall be programmable from any of the following:

a. Full NEMA and NTCIP operation
b. Select a program number for an established phase sequence
c. Select one to four timing rings, with concurrent or sequential phase assignment
d. Select three or four phase diamond

Specific sequences required by the Department shall be selected from the above operation. Program for selecting phases shall include provisions to disable phases with each program, (phase on - off). Alternate sequences may be used to satisfy the above requirements however mutual coordination of the separate rings will be required. All controller units shall provide these sequences.

Diamond sequences shall include two operational sequences for interstate ramp interchanges. The operation of the controller unit as a 4 phase, and 3 phase diamond shall be keyboard selected and the standard timing function required by NEMA TS1 shall be provided for each phase. The configuration shall operate as two independent four phase rings. There shall be two mutually exclusive inputs as defined in Appendix (pins 12 and 13) that will force the controller unit into 3 phase or 4 phase operation. Additional circuits in this harness shall be for controller and cabinet interlock. Pin 35 listed in Appendix shall be a ground true controller interlock output. The controller shall assert this output when it is present and powered on. Pin 42 listed in Appendix shall be a ground true cabinet interlock input. This input shall be internally pulled up to 24VDC and the controller shall sense this input and operate only when it is present. Special clearance intervals shall be pre-timed programmable and shall be activated within the sequence shown. This shall be overridden while under computer control, TBC control, or by the inputs defined below. Figure 18A-4 illustrates the assignment of phase numbers to the traffic movements. The additional detector inputs shall be provided with these controllers as stated in the pin assignment for the connector.

8.1.1 Four Phase Diamond Operation.

The normal sequence of operation shall be phase 2/5 → 4/5 → 1/6 → 1/8.

The point at which operation may be switched from 4 phase to 3 phase operation shall occur by forcing the sequence into concurrent left turns (inside clearance during Ø1 and Ø5).

The loop detector layout for 4 phase diamond operation shall be as defined in Figure 18A-5. Each detector input shall be to the phase shown and provide the normal phase timing required by NEMA TS1. The controller unit software shall provide the additional logic for Detector Circuit operation in the following description:

a. Detector Circuit #1 -
   1. Shall extend phase 1/6 if phase 1/8 is called.

2. Shall call phase 2/5 if phase B overlap is not green and phase 4/5 is not called.
3. Extend intervals inside left turn clearance interval.

b. Detector Circuit #2 -
1. Shall extend phase 2/5 if phase 4/5 is called.
2. Shall call phase 1/6 if phase A overlap is not green and phase 1/8 is not called.
3. Extend intervals inside left turn clearance interval.

c. Detector Circuit #3 (45P) and #4 (45S) -
During the phase 4/5 red condition the 45P detector shall always be active and the phase 45S detector shall always be inactive. A phase 4/5 green plus a phase 1/6 call plus a 0.2 second gap in 45P detection shall disable the 45P detector and enable the 45S detector until the phase 4/5 signal changes to yellow. The circuits then switch back to normal - 18P active and 18S inactive until the condition is repeated.

d. Detector Circuits #5 (18P) and #6 (18S) -
During the phase 1/8 red condition the 18P detector shall always be active and the phase 18S detector shall always be inactive. A phase 1/8 green plus a phase 2/5 call plus a 0.2 second gap in 18P detection shall disable the 18P detector and enable the 18S detector until the phase 1/8 signal changes to yellow. The circuits then switch back to normal - 18P active and 18S inactive until the condition is repeated.

e. Detector Circuits #7 (25S) and #8 (16S) -
The phase 2/5 detector circuit shall always be active during phase 2/5 red. A phase 25 green plus a 0.2 second gap in detector 25S shall disable this circuit until loss of phase 2/5 green.
The phase 1/6 detector circuit shall always be active during phase 1/6 red. A phase 1/6 green plus a 0.2 second gap in detector 16S shall disable this circuit until loss of phase 1/6 green.
The 0.2 second gaps mentioned above shall be keyboard programmable from 0 to 3.0 seconds in 0.10 second increments or smaller.
The phase 45P detector shall always extend phase 4 during phase 4/6 interval.
The phase 45P detector shall always extend phase 8 during phase 8/2 interval.
An indication shall be provided for both the 45P detector circuit and the 18P detector circuit to indicate when they are active. When a circuit becomes inactive, the indication shall go out and stay out until it again becomes active.

f. Concurrent Timing Requirements -
Refer to Figures 18A-3 for the following descriptions.
The clearance interval phase 4/6 when sequencing from phase 4/5 to 1/6 shall time concurrently with phase 6, however phase 6 may not terminate green until phase 4 yellow interval has timed out.

The clearance interval phase 2/8 when sequencing from phase 1/8 to phase 2/5 shall time concurrently with phase 2, however phase 2 may not terminate green until phase 8 yellow interval has timed out.
All left to right internal clearance (Ø1/ Ø5) times from phase 4/5 to phase 1/8 shall use the same timing settings for minimum green, extension, max green, yellow clearance, and red clearance.
All right to left internal clearance (Ø5/ Ø1) times from phase 1/8 to phase 4/5 shall use the same timing settings for minimum green, extension, max green, yellow clearance, and red clearance.
Separate timing settings for minimum green, extension, max green, yellow clearance and red clearance shall be provided for each of the two external clearance intervals (Ø2/ Ø8 and Ø4/ Ø6 from Ø1/ Ø8 to Ø2/ Ø5 and Ø4/ Ø5 to Ø1/ Ø6).

8.1.2 Three Phase Diamond Operation.

a. Sequence.

The controller unit shall be keyboard selected for 3 phase diamond operation. The normal sequence of operation shall be, except as modified below, 4/8 → 2/6 → 1/5.

The point at which operation may be switched from 3 phase to 4 phase operation shall be from phase 1/5 to 4 phase inside clearance interval phase 1/5.

The path from 4/8 to 2/6 shall be keyboard selected and selected by the TBC (on a time of day basis) for one of the five possible phase combinations of lead/lag left turn clearance movements. These possible phase combinations shall be permitted when individual phase gap time expires.

4/8 → 4/6 → 2/6
4/8 → 4/5 → 2/6
4/8 → 2/6
4/8 → 2/8 → 2/6
4/8 → 1/8 → 2/6

The path from 2/6 to 1/5 shall be keyboard selected and selected by the TBC (on a time of day basis) for either 2/6 → 1/6 → 1/5 or 2/6 → 2/5 → 1/5.

The path from 2/6 to 4/8 shall always be through 1/5 and terminated simultaneously. The sequencing shall be flexible and phases shall be terminated bases on traffic actuation and gaps programmed for the phase.

b. Detector Operation.

The loop detector layout for 3 phase diamond operation shall be as defined in Figure 18A-6.

The 1P detector shall function as a phase 2 calling detector during phase 4 and as a phase 1 extending detector during phase 2.

The 5P detector shall function as a phase 6 calling detector during phase 8 and as a phase 5 extending detector during phase 5.

8.2 TIMING INTERVALS - ALL SEQUENCES.

The controller shall be programmable for the following timing parameters and any of the selected sequences. Each phase shall be timed independently and special clearance phasing described in the diamond sequence may be timed by group.

The following timed intervals shall be programmable in the minimum range for each interval:

TABLE 18A-4 - TIMING INTERVALS

INTERVAL	RANGE (SEC.)	INCREMENT (SEC.)
Vehicle passage	0-25.5	0.1
Yellow clearance	3-25.5	0.1
Red clearance	0-25.5	0.1
Added initial min. green	0-25.5	0.1
Red revert	0-25.5	0.1
Minimum gap	0-25.5	0.1
Delay/extend detector timing	0-25.5	0.1
Walk	0-255	1.0
Pedestrian clearance	0-255	1.0
Time before gap reduction	0-255	1.0
Time to reduce gap	0-255	1.0
Min initial green	0-255	1.0
Maximum added initial green	0-255	1.0
Overlap timing	0-25.5	0.1
Maximum green I, II & III	0-255	1.0
Maximum green extension interval	0-255	1.0

8.2.1 Guaranteed minimum time shall be provided for each phase, overlap, and preempt yellow. Minimum values shall not be changeable or overridden from the programming sources listed in this specification. Guaranteed minimum interval value shall be three seconds.

8.2.2 Maximum Green Intervals.

The controller unit shall provide two maximum green intervals per phase, however three are preferable. Maximum intervals shall be selected by either time-of-day or external input.

8.2.3 Maximum Green Extension.

The controller unit shall be capable of extending a phase maximum green time by continuous vehicle demand. If the phase terminates by expiration of the maximum time for one successive cycle, then its maximum green time in effect (Max 1 or Max 2) shall automatically be extended by a maximum green extension interval. The maximum green time shall be increased, until it equals Max 3, on each successive cycle that the phase green is terminated by the Max 1 or 2. If the phase gaps out for one successive cycle, then the maximum green time shall return to the original Max 1 or 2 value.

An alternate method for providing active traffic responsive timing shall use the volume/occupancy system detectors capability assignment to the phase detector. A preprogrammed cycle plan shall be initiated for providing timing modification to meet the traffic demand.

8.2.4 Volume Density Intervals.

Each phase shall have volume density intervals conforming to NEMA standards.

8.3 OVERLAPS.

The controller unit shall provide sixteen internally generated overlaps: Each overlap may be programmable as standard or protected/permissive. The capability shall be provided for reassignments of a minimum of four phase outputs to overlap operation shall be in the software for implementing special sequencing requirements and shall not require rewiring the controller signal outputs on the back-panel.

8.3.1 Overlap Timing.

Green, yellow and red timing intervals shall be provided for each overlap. These intervals shall permit the overlap to remain green after terminating the parent phase in addition to providing separate yellow and red clearance intervals for the overlap. A programmable feature shall provide a selection of sequencing that would hold all phases red or advance to the next serviceable phase green after the parent phase has terminated and the overlap timing is in effect. In either selection the next serviceable phase interval shall not begin timing until the overlap times have expired. Overlaps shall be controlled by the parent phase if the overlap timing intervals are not programmed. The overlap sequence shall never violate the conventional green,

yellow, red sequence under any circumstance. This timing operation shall be provided during all operational requirement herein specified. Any conflicting operation with this timing requirement shall supersede the timing extensions.

Overlap programming flexibility shall permit the user to assign the timed overlap to follow any parent phase(s).

8.3.2 Multi-Overlap Operation.

The controller unit shall be capable of eight overlaps including the standard four and assigning four phase outputs as overlaps. If a phase output is assigned as an overlap then it shall function as a standard overlap and programmed in the EEPROM. Changing these overlap assignments shall be programmed from the keyboard of the controller unit and provide warning of the impending sequence change.

8.4 RECALL FUNCTIONS.

The controller unit shall provide the following programmable features for each phase.

a. Locking/Non-locking detector memory
b. Vehicle recall
c. Pedestrian recall
d. Maximum recall
e. Soft recall - Locking/Non-locking memory

Soft recall shall return the controller unit to the programmed phases in the absence of all other calls.

8.5 INITIALIZATION.

The controller unit shall permit power start and external start to be individually programmed by phase and interval. Start intervals shall be green, yellow, red, all red or flash. During a power start condition, the controller unit shall be programmable for a timed display of an all red or flash interval before the selected start phase(s) and intervals are displayed. Data reference shall be made to the data in the EEPROM. An error shall keep the controller non-operational until the error is corrected. Resets shall be initiated to correct data integrity and begin the controller operating.

8.6 ADDITIONAL FEATURES.

8.6.1 Last Car Passage.

The controller unit shall provide guaranteed passage operation on a per phase basis. When selected, this feature shall provide a full passage (vehicle extension) interval when a phase gaps out with a gap in effect less than the passage time. The phase shall terminate after the passage interval expires.

8.6.2 Dual Entry.

The controller unit shall provide both single and dual entry operation. When selected, dual entry shall cause the controller unit to insure that one program selected phase is timing in each ring. If calls do not exist in a ring when a barrier is crossed, the controller shall select a programmed compatible phase and operate it concurrently with the phase or phases that have calls. When the selected controller sequence is non-NEMA, then an acceptable method of calling a compatible phase is the use of vehicle detector switching.

8.6.3 Conditional Service.

The controller unit shall provide a programmable conditional service feature when the controller is operated in the standard NEMA sequence. When selected, the controller unit shall service only one odd numbered phase during a sequence, once normal service to that phase has been completed and enough time for additional service exists on the concurrent even phase. The odd phase (left turn) shall be serviced if the vehicle clearance time of the terminating even phase plus a conditional service minimum green is less than or equal to the time remaining on the maximum green timer of the even phase which is still timing.

A conditional service, minimum green time shall be programmable for each phase. This interval shall insure a minimum green if the phase is conditionally served.

The controller shall be programmable to re-service the even phase after conditionally serving an odd phase following the same guidelines stated above. Once an even phase has been conditionally re-serviced, the odd phase shall not be conditionally served again until returning to the concurrent group that is timing.

8.6.4 Pedestrian Functions.

The controller unit shall provide the following additional pedestrian functions:

a. Actuated phase rest in walk
b. Pedestrian clearance protection during manual control
c. Exclusive pedestrian occurring once at a programmable point within each of the previously required sequences.

8.6.5 Backup Protection.

Programming shall be provided to inhibit re-service of odd phases within the same concurrent group. When programmed, backup protection shall take priority before conditional service.

8.6.6 Simultaneous Gap Termination.

The controller unit shall provide a programmable simultaneous gap termination feature. When programmed, phases in both rings must gap out together in order to terminate the green interval and cross the barrier.

9.0 DETECTOR INPUT FUNCTIONS.

9.1 DESIGN REQUIREMENTS.

The controller unit shall provide a minimum of sixteen vehicle detector inputs. Each input shall be assignable to any single phase or group of phases and be programmable for type of function (detector switching).

Detectors 1 through 8 shall meet the NEMA standards for vehicle detector inputs into phases 1 through 8. Remaining detectors shall utilize inputs assigned to the auxiliary functions in the D connector as specified in the appendix.

9.2 DETECTOR INPUT PROGRAMMING.

All vehicle detector input shall be user-programmable for vehicle calls to any or all of the eight phases in the controller. Each shall be selected for multiple applications identified in the following descriptions in addition to the vehicle call inputs. The controller shall include a minimum of three programming plans selected by TOD or cycle/split/offset for assignment of the programmable feature of each detector input.

9.2.1 Standard Detector Input.

All inputs shall default to standard operation, providing one call per actuation and shall be assigned to each phase, (i.e. det 1 to phase 1, det 2 to phase 2, etc.).

9.2.2 Delay and Extend Detector Input Timing.

A minimum of sixty-four (64) detector inputs shall be programmable to delay a vehicle call to the assigned phase(s). The delay timer shall have a range from 0 to 25.5 seconds. The timing shall begin upon activation of the input to the controller. If the input remains when the time has expired then the input shall be directed to the phase(s). The timing shall be reset when the input is removed. The delay timing function shall be inhibited during the selected phase green interval.

A minimum of sixty-four detector inputs shall be programmable for extending the vehicle call to the assigned phase. The extend timer shall have a range from 0 to 25.5 seconds. The extending time shall begin upon removal of the input to the controller and will extend the call to the phase until the expiration of the programmed time.

9.2.3 Phase Extending Detector Input.

All inputs shall be programmable to extend assigned phase or phases green interval timing and once programmed this input will not call the phase for service. All input shall be programmable to switch assigned phases during a programmed red interval and begin extending the assigned phase green interval.

9.2.4 Call Detector Programming.

All inputs shall be programmable to call assigned phase or phases during its red interval and not extend the green time from any actuation.

10.0 PREEMPTION.

The controller unit shall provide a minimum of five priority/non-priority preemption sequences. This capability shall be a standard controller unit feature and shall be provided within the modules and software. All required features specified above shall be available and programmable within the preemption operation.

10.1 PRIORITY/NON-PRIORITY PREEMPTOR DESIGN REQUIREMENTS.

Each of the five priority/non-priority preemptor shall be capable of railroad, fire lane, or emergency vehicle preemption sequences. Any one of the following conditions shall be selected to occur during preemption.

a. Hold phase green
b. Limited phase service, following track clearance
c. All red
d. Flash

10.1.1 Preemptor Call Priority.

Preemptor shall be selected as priority or non-priority. Lowest numbered priority preemptor shall have highest priority and will override a higher numbered priority preemptor calls. A minimum of two preemption phases shall be give equal priority and override higher numbered preempts. Additionally, priority preemptor calls shall override all non-priority preemptor calls. Non-priority preemptor calls shall be serviced in the order received.

10.1.2 Preemptor Call Memory.

Each preemptor shall provide a programmable locking memory feature for preemptor calls. The preemptor in the non-locking mode shall not service a call when it is received and dropped during the delay time.

10.2 PRIORITY/NON-PRIORITY PREEMPTOR TIMING.

The following preemptor timing features shall be provided for each of the priority/non-priority preemptor inputs.

10.2.1 Preemptor Timing Intervals.

All preemptor timing intervals shall be programmable from 0-60 minutes in 1 minute increments, 0-255 seconds in 1-second increments, or 0-25.5 seconds in 0.1-second increments, as indicated for each of the following.

10.2.2 Delay Time.

The delay time interval shall inhibit the start of the preemption sequence for a specified duration. This interval shall begin timing immediately after receiving a preemption call. (0-255 sec., 1 sec increments)

10.2.3 Duration Time.

Each preemptor shall provide a programmable minimum and maximum duration time that a preemptor shall be active, (Min: 0-255 sec., 1 sec. increments, Max: 0-60 mins, 1 min. increments).

10.2.4 Minimum Times.

Phase timing at the beginning of a preemption sequence shall be controlled by the programmable minimum times before advancing to the next sequential interval. Preemptor minimum times shall be programmable for the following intervals:

a. Green / Pedestrian Clearance (0-255 sec., 1 sec. increments)
b. Yellow (3-25.5 sec, 0.1 sec. increments)
c. Red (0-25.5 sec. 0.1 sec. increments)

10.2.5 Pedestrian Timing.

If a phase is timing a walk interval at the beginning of a preemption sequence, then the phase shall advance immediately to the preemption pedestrian clearance. A selectable timing interval shall be provided to time the minimum pedestrian clearance through the vehicular yellow interval, or alternately advance immediately to vehicular yellow.

During preemption, pedestrian indicators shall be user selected to be solid don't walk, blank, or operational during preemption.

10.2.6 Overlap Timing.

Overlaps shall be programmed to operate with the phase(s) or to clear to red then remain red during preemption. Overlaps terminating or forced to terminate when a preemption sequence begins, shall be selectable to time the preemptor minimum yellow and red clearance times or to time programmed overlap timing specified in Section 8.3.

10.2.7 Track Clearance.

Each preemptor sequence shall provide user-programmable green, yellow and red track clearance intervals. Track clearance shall begin timing immediately after the preemptor minimum red interval, (Section 10.2.4).

A minimum of two (2) phases shall be selected as track clearance phases. During the track clearance period, the selected phases shall time the track clearance green, yellow and red intervals once, and then advance to the next programmed interval (Section 10.2.8).

If track clearance phases are not selected, the track clearance intervals shall be omitted from the preemption sequence.

10.2.8 Limited Sequence.

The limited sequence program shall be user selected and begin immediately after track clearance. It shall remain in effect until preemptor duration time, phase minimum times has elapsed, or preemptor call has been removed.

10.2.9 Limited Sequence Phases.

Any active phase, except a track clearance phase(s), shall be selected for operating during limited sequence operation. Those phases not selected shall remain red during preemption. The controller unit shall remain in all red interval during the limited sequence interval when no phases are selected for operation during limited sequence.

If flash is selected for the limited sequence interval, up to two permissive phases shall be selected to flash yellow. The remaining phases shall flash red. Overlaps associated with the phases flashing yellow shall also flash yellow unless they have been forced to terminate in which case they shall remain dark. Flashing shall occur by controlling the appropriate load switch driver outputs.

10.2.10 Limited Sequence Timing.

During the limited sequence interval, the selected phase(s) shall operate normally (as outside of preemption). When preemption is exited, the current phase shall terminate after minimum green time is expired.

If any limited sequence intervals are programmed with zero timing, the equivalent interval time of the controller unit shall be used.

10.2.11 Exit Phases.

Two permissive exit phases shall be selected to time after the preemption sequence has been completed. These phases shall serve as transition phases to return the controller unit to normal operation. Exit phases shall time their normal programmed interval times.

Additionally, it shall be possible to program exit calls on any of the phases used in normal operation. Phases programmed as exit phases shall be served first, while exit calls on the remaining phases shall be served in normal sequence.

10.3 PREEMPTOR ACTIVE OUTPUT.

A preemptor active output shall be provided for the five priority/non-priority preemptor. The output shall be set to ON when the preemption sequence begins and shall remain ON for the duration of the sequence.

10.4 POWER INTERRUPTION.

If a preemptor call is active when power is restored to a controller unit, the voltage monitor output shall be set to FALSE, placing the intersection into the flashing mode of operation. Additionally, if external start is applied during a preemption sequence, the intersection shall be placed into the flashing mode of operation. The flashing mode of operation shall remain in effect until the preemptor call has been removed or the preemptor maximum duration time has elapsed. The controller shall begin operating as described by NEMA during power interruption.

10.5 PREEMPTOR STOP TIME.

A stop time input shall stop the timing of the current active preemptor. The stop time input shall normally be controlled by the conflict monitor unit.

11.0 AUTOMATIC FLASH.

The controller unit shall provide automatic flash selection per the requirements of the Manual on Uniform Traffic Control Devices. The flash phases shall be programmable through the keyboard and flashing shall be controlled by changing the controller outputs to the load switches from the normal sequencing of three outputs to a flashing output to one selected output. The controller shall be programmable for selecting the indication which will flash. Automatic flash shall be selected by external input, system command, or time-of-day from the internal time base clock. Two flashing controls shall be provided that alternate and shall be program selected for assignment as needed to each phase that will prevent a yellow/yellow conflict.

12.0 CONFLICT MONITOR.

The conflict monitor shall conform to NEMA TS-1, Section 6, in addition to the requirements of this specification. A six (6) channel monitor or twelve (12) channel monitor shall be provided with the controller as required on the order or plans.

Each conflict monitor shall utilize and be provided with a programming card specified in the above mentioned NEMA standards.

12.1 MECHANICAL DESIGN.

The frame shall be completely enclosed within sheet aluminum housing with a durable protective finish. The housing shall be removable for service to the internal circuitry.

The programming card shall be inserted through the front panel of the conflict monitor. Card guides should be provided for aligning the edge connector of the card with the mating jack. The cards shall be removable without use of tools or disassembling of the housing.

All printed circuit boards shall meet, as a minimum, the requirements of the NEMA Standard. In addition, they shall also meet the following requirements:

a. All plated-through holes and circuit traces shall be plated with solder to protect exposed copper. Any wire jumpers included on circuit boards shall be placed in plated-through-holes that are specifically designed to contain them. Circuit track corrections by track cuts and jumpers that are tack soldered to circuit tracks are not acceptable.
b. Both sides of the printed circuit board shall be covered with a solder mask material.
c. The circuit reference designation for all components shall be clearly marked adjacent to the component. Pin 1 for all integrated circuit packages shall be designated on all printed circuit boards.
d. All electrical mating surfaces shall be gold-flashed.
e. All ICs 14 pin and up shall be installed in machine tooled grade sockets meeting these requirements. All sockets shall be AUGAT-8XX-AG11D or approved equal, meet UL specification 94V-0, be constructed with two-piece, machined contacts and close-ended to eliminate solder wicking. The outer sleeve shall be brass with tin or gold plating and tapered to allow easy IC insertion. The inner contact shall be beryllium copper sub-plated with nickel and plated with gold.

12.2 ELECTRICAL DESIGN.

Liquid crystal displays shall be provided for displaying load switch outputs during normal operation, operations selected from a menu, and fault sensed. When a fault is detected,

the display shall present two displays, sequentially, one showing all load switch outputs at the time of the fault detection, and one showing the specific fault and date/time detected.

Circuitry shall be provided to detect sequential failure and indicate the channel on which the failure occurred. This feature shall be programmable to select either enable or disable for each channel. The following shall be failure indicated as sequential failures:

a. Yellow indication on for less than 2.5 seconds.
b. No yellow indication after green.
c. Simultaneous display of two or more indications within the same signal head, except as allowed by the MUTCD.
d. Combinations of any above.

All solid state components shall be mounted on printed circuit boards. The electronic components and printed circuit board(s) shall comply with the requirements outlined for the controller in Section 7.10 of this standard.

The conflict monitor shall be capable of recording and holding in memory (logs) the last ten conflicts detected and the last ten power failures. The time and date shall be indicated for each conflict and power failure. The memory shall be non-volatile during power loss and meet the requirements for the controller in Section 7.3, excluding Section 7.3.1. A log of the sequence of 20 events prior to a fault detection shall be retrievable prior to resetting the monitor and accessible through the communication port.

Each conflict monitor will be supplied with a 4-foot RS-232 cable with male connectors on each end. The monitor shall have a 9 pin communication port on the front of the monitor. The communication port shall be as defined herein, compatible with EIA-RS-232 standards for connection to a portable computer, printer, or other electronic devices. Communications shall be full or half duplex using FSK transmissions. The data transmission rate shall be selected baud. Control of the port shall be selected in menu form on the monitor display or request through the communication port. Data transfer to other electronic devices shall be provided with download commands from the device.

The monitor display shall present a selection menu for various data and programs available. This shall include, but not limited to, date and time set, review of programmed permissive phases and various logs.

12.3 COMMUNICATIONS.

The conflict monitor shall generate a report to the controller each time a change in status occurs. The report shall include the following as a minimum:

a) The configuration of the programming card.
b) The channels which have the NEMA plus features enabled.
c) A listing of the phases which are monitored for short yellow times.

Additionally, the conflict monitor shall store and report at least five (5) failures containing the information listed above when interrogated directly via the portable download/upload unit.

The report shall list at least the last five (5) failures from the monitor which contain the following:

a) Time of the occurrence of the failure.
b) The channels (Green, Yellow, Red and Walk) active at the time of the failures.
c) The status of the CVM input and the +24 V 1 and 2 inputs.
d) The type of failure (conflict, switch failure, red failure, etc.)

The conflict monitor will be capable of transmitting (via RS-232 port) an ASCII report to the controller unit.

The conflict monitor shall provide three (3) reports for interrogation. The first is an ASCII record of all data entries and programming card configurations. The second is an ASCII formatted record of all failures and each power on/off cycle. The last ten of these failure records will be available in report form. The third report will be a sampling report and will contain the twenty (20) samples of all of the inputs to the conflict monitor. Each sample will be taken at 0.1 second intervals so that the last two (2) seconds of real-time outputs of the load switches can be viewed.

Each of the reports will have the appropriate headings and will consist of ASCII lines of not greater than eighty (80) characters so that a clear presentation of the data can be viewed from the screen of a notebook computer using the standard ASCII character codes.

The monitor port shall be programmed in the following format:

a) Standard EIA-232 convention
b) Each word shall be eleven (11) bits long: eight (8) data bits, one (1) start bit, one (1) stop bit, no parity.
c) 2400 to 9600 baud
d) The note book or traffic controller unit will send a message of one byte to the monitor requesting each of the reports. After the one-byte message, the controller will issue an XON command to start the data flow. The data flow can be stopped with an XOFF command at any time.
The data sent to the notebook or controller unit in response to the request message will be the ASCII report requested. The last byte sent by the monitor will be an EOT (End Of Text- 04H).

If the controller issues an XOFF during a reporting request, the monitor will stop the data flow. If an XON is not issued within 30 seconds, the monitor will time out and set its pointer to the beginning of the report.

The next XON will then start at the beginning of the requested report. A report will also perform the XOFF function to the conflict monitor.

Definitions of the requests are as follows:

Request report 1:	31H
Request report 2:	32H
Request report 3:	33H
XON (DC1)	11H
XOFF (DC3):	13H

13.0. SOLID STATE SIGNAL LOAD SWITCHES.

The load switches shall follow those standards previously set forth. In addition to those, each load switch shall have indicators on the front showing the input state of operation with the indicators vertically aligned and the red input on top, yellow in the middle, and green below.

14.0 SIGNAL FLASH TRANSFER RELAY.

The transfer relays shall be electro-mechanical and shall be energized during normal sequential operation of the traffic signals with the operational switch in the normal position. This relay shall be de-energized when the indications are to be flashing. The relay shall transfer the field signal circuits to the flashing circuits and energize the flasher.

14.1 PHYSICAL DESIGN.

The relay shall be enclosed in a transparent case for protection against dust, dirt and other foreign objects. The case shall be a maximum of 2.671 inches high, 2.375 inches wide and 1.75 inches deep. The insulated base shall extend 0.625 inch from the case and shall be 1.990 inches wide and 1.120 inches deep. The contacts of the plug shall be flat blades arranged in two (2) parallel rows, 0.475 inch apart with the flat side of the blades in line with the row. The contacts of the plug shall be 0.250 inch wide, 0.060 inch thick, and extend past the insulated base 0.520 inch. Each row shall have four (4) contacts. The base shall be keyed with a pin that has a diameter of 0.156 inch and extend past the insulated base 0.685 inch. The pin shall be centered between the row of contacts and centered in line with contacts 5 and 6 of the plug. The contacts of the plug shall be numbered for wiring purposes, from 1 through 8. The top row shall be consecutively numbered from left to right using the odd numbers and the bottom row shall be consecutively numbered from left to right using even numbers.

14.2 ELECTRICAL DESIGN.

The relay coil shall be rigidly supported by the insulated base. The contacts shall be 2 Form C, rated at 20 Amps, and shall be 3/8 inch diameter, silver cadmium-oxide. The relay's life shall be 5 million mechanical operations and 100,000 electrical operations. Each contact shall be rated for power bus control and 1 KW tungsten at 120 VAC. The coil shall be 110 VAC and shall pick up at 80% of nominal voltage. Maximum power requirement of the coil shall be 10

VA. The relay shall be wired and the socket pin assignments arranged according to the following table:

TABLE 18A-5
TRANSFER RELAY WIRING

PIN	FUNCTION	PIN	FUNCTION
1	Relay Coil	5	Common Circuit #1
2	Relay Coil	6	Common Circuit #2
3	NC Circuit #1	7	NO Circuit #1
4	NC Circuit #2	8	NO Circuit #2

The base, relay, and enclosure shall have a minimum rating of 1500 volts.

15.0 SOLID STATE FLASHER.

The flasher shall comply with NEMA TS-1, Section 8 and Section 7.2.3.2. The flasher shall be a two circuit flasher rated at 15 amps per circuit. (Type 3)

16.0 VEHICLE AND PEDESTRIAN DETECTORS.

Vehicle detectors shall be fully digital, microprocessor designed, auto-tune, card rack mounted and have four channels of detection per card, Type 8. Unless otherwise noted the detectors shall be provided with the order for controller in Types 3, 5, 6, and 7 cabinets. Detector units shall conform to applicable environmental, functional, dimensional, and design required in NEMA TS 1, Section 15. The amplifier shall not consume more than 385 ma of current at the rated voltage. Delay and extension timings shall meet this standard when the order or plans require the detector to have such timing. Each channel shall have an erasable, write-on surface for channel identification.

Pedestrian detectors shall be of an approved model accepted by the Department under the appropriate Traffic Control Standard. Each order or plans shall identify the type and quantity of detectors in each cabinet.

16.1 SENSITIVITY AND ACCURACY.

Detector units shall conform to NEMA TS1, Section 15. Each detector shall be accurate for detecting all vehicles from motorcycles to tractor-trailer combinations which ordinarily travel public streets and highways and are comprised of sufficient conductive material, suitably located to permit recognition and response by the detector system. There shall be a minimum of sixteen selected sensitivity ranges located on the front of the unit for each channel. The range of sensitivity shall be, nominally, between 0.00 % - 1.250% change in total loop inductance.

16.2 OPERATING MODES.

Each channel shall be self-tuning in accordance with the NEMA standards. Response time for compensation from extended detection, re-tuning to track the changing electrical characteristics of the loop and recovery from power interruption shall be accomplished within 50 milliseconds. Each channel shall have an on and off switch. Each detector card shall have a momentary push switch to reset all channels.

16.3 FAIL SAFE.

The detector shall operate when sensor loop shorted to ground or not in good condition. The unit shall generate a continuous call when re-tuning failed sensor loop or failed detector unit.

16.4 CONTROL VOLTAGE.

All controls shall be DC voltage in accordance with the NEMA standards. The control circuit from the delay/extension feature shall follow this requirement.

16.5 CONTROL SWITCHES.

All switches, connectors, and fuses shall be located on the front of the card. Each switch shall be permanently labeled to identify its function. Each position shall be labeled to identify its mode of operation. Each mode of operation shall be simple to program with one switch position assigned to one function.

16.6 PRINTED CIRCUIT BOARD DESIGN.

The PC board shall be in accordance with NEMA TS1 Section 15. All pressure contracts shall be gold flashed. All components mounted and soldered to the PC board shall be easily removed and replaced without causing damage to the board or traces. Each individual PC board shall be identified by manufacturer and a serial number or part number clearly stamped or etched on the board. All PC boards shall be coated with an epoxy or approved equal type material to prevent erratic performance due to high humidity, condensation and growth of fungus and mildew. This coating will not cover the component on the board, but once the components are in place, they and the soldered joints shall be covered with a moisture and fungus proof, clear type of acrylic lacquer. This coating shall not be injurious to the board or components and shall not interfere with the repair of the circuitry or the replacement of components.

16.7 PEDESTRIAN DETECTOR ISOLATION.

Two - two channel pedestrian isolation circuit boards shall be provided. There shall be two circuits using optical and transformer isolation designed and tested for a minimum of 2500 volts D.C. between the inputs and outputs. Each circuit shall recognize a minimum 5 millisecond switch closure between conductor pairs from the pedestrian push button operated on a maximum of 5 volts and 20 milliamps. Transient protection shall be on the input and shall withstand a 10 microfarad capacitor charged to 2,000 volts to be discharged between input pins

or between input pin and chassis ground. When the input switch closure occurs, the circuitry shall close the pedestrian call circuit between the controller input and logic ground and remain closed for a minimum of 100 milliseconds or the time the pedestrian push button is closed, whichever is larger. Additional circuits shall be provided to maintain isolation, lock the pedestrian actuation, and reset when an input from the DC level from the controller activates the walk and raises the potential of the field circuit from five volts to 24 volts. Each board shall have a fused power supply. Output status indicators shall be located on the front panel for each channel. A three position switch shall be provided on the front of the unit for each input circuit and provide "on", "off", and momentary "on". Alternate designs will be reviewed at the time of bid for pedestrian actuation and annunciator located at the pedestrian push button.

The card shall fit into the vehicle detector card rack. The dimension characteristics shall follow the Type 7 card detectors standards Section 15 in NEMA TS1 1989.

16.8 PEDESTRIAN ISOLATION CARD CONNECTOR.

The isolation card shall be designed with an edge connector. The connector shall be 22 position, dual inline type connector with the following position assignments:

TABLE 18A-6
PEDESTRIAN ISOLATION CARD CONNECTOR ASSIGNMENT

PIN	FUNCTION	PIN	FUNCTION
2A/1	SPARE/CH 1 ØWALK	N	AC(+) 120 V
B/2	SPARE/CH 2 ØWALK	P	SPARE
C	SPARE	R	SPARE
D	INPUT #1	S	SPARE
E	INPUT COMMON	T	SPARE
F	OUTPUT #1 (COLLECTOR)	U	SPARE
H	OUTPUT #1 (EMITTER)	V	SPARE
J	INPUT #2	W	OUTPUT #2 (COLLECTOR)
K	INPUT COMMON	X	OUTPUT #2 (EMITTER)
L	CHASSIS GROUND	Y	SPARE
M	AC (-) 120 V	Z	SPARE

16.9 DETECTOR CARD RACK.

Detector card racks shall be designed with top and bottom card guides for four-four channel detector cards mentioned above, two-two channel isolation cards, and a power supply

installed in type 6 cabinets and two-four channel detector cards mention above, two-two channel isolation cards, and a power supply in Types 3 and 5 cabinets.

The housing shall be constructed of 5052 aluminum alloy of a minimum thickness 0.062 inch with a protective coating (painted or anodized). Removable covers shall be provided on top, bottom, and back allowing access to the internal hardware and circuitry. Each cover shall be easily removable with the use of conventional hand tools.

The dimension of the rack in Types 3 and 5 cabinets shall be approximately 10 inches wide, 6 inches high and 9 inches deep and in Type 6 cabinets shall be approximately 14 inches wide, 6 inches high and 9 inches deep. The rack shall be mounted on the inside of the door of Type 3 cabinets as shown in drawing 18A-1 and attached to the bottom shelf in Types 5 and 6 cabinets, hinged to swing out to provide access to the rear assembly without removing the shelf(s).

The card rack for Type 3 cabinets shall be as above except: the top shall be rain proof with a drip edge to prevent water from running across the lower side of the top and into the rack and shall have a power supply, two - four channel detector cards positions, and two - two channel isolation cards. These shall be wired as follows: first card detector to vehicle call input 1 through 4, second card detector to special detector inputs 1 through 4, first isolator card to pedestrian detector inputs phases 2 and 4, and second isolator to preemptions 1 and 2.

The power supply shall meet the dimensional requirement of a four channel card rack detector type 8, operate on 120 VAC, 60 Hz, and the AC+ into the power supply shall be fused. The fuse shall be located on the supply card, permanently labeled indicating the fuse and size. The supply shall meet NEMA specifications and provide 24 VDC, 385 ma, regulated as specified in NEMA TS-2-1998, Section 15.2.6.2. A power indicator and a fuse shall be provided on the front of the supply for each output. A pull handle shall be on the front of the unit. The power supply shall be located on the left side of the rack when viewed from the front. DC voltage from the power supply shall not be supplied to the isolator positions.

The rack shall be wired with a separate power cord and individual wires to each card position. The power cord shall have each wire identified with a sleeve marked, DR-AC+, DR-AC-, and DR-Gr, and terminated with a spade terminal connected to the terminal for the controller power. Each module slot shall be wired directly to the card edge connector with color coded harness. The harness shall meet the requirements for wiring elsewhere in this standard. Each detector lead in from the field wiring shall be a twisted pair. A sufficient amount of slack in the wiring harness shall allow the rack to be moved for visual inspection and mechanical repairs. The wiring shall be cabled together into a harness, attached to the back right side (viewed from the front) with an approved cable clamp, and routed to the back and detector panel.

The cards in the rack shall be numbered from left to right viewed from the front in order to identify the position function. For Type 6 cabinets, the first position will be the power supply; the second, a four channel detector for phases 1, 2, 3, and 4; the third, a four channel detector for phases 5, 6, 7, and 8; the fourth, a four channel detector for special detectors 1, 2, 3, and 4; the fifth, a four channel detector for special detectors 5, 6, 7, and 8 ; and the sixth and seventh, each

a two channel isolation card for pedestrian detection to phase 2, 4, 6, and 8 respectively. For Types 3 and 5 cabinets, the first position will be the power supply; the second, a four channel detector for phases 1, 2, 3, and 4; the third position, a four channel detector for special detectors 1, 2, 3, and 4; the fourth and fifth position each a two channel isolation card for pedestrian detection to phase 2 and 4, and preemption input to 1 and 2.

Wiring from each detector and isolator output shall be directly to and terminated to the front of the back panel at their associated terminals of the controller. The control circuit wiring for each detector and isolator input shall be made directly from the associated terminals of the controller. The wiring for the field input to the card rack shall be terminated with the associated terminal on the detector panel. Each wire from the card rack to the back panel shall be terminated using a spade type compression terminal and an identification sleeve identifying each as follows: Detector position one, VD-1-1, VD-1-2, VD-1-3, and VD-1-4; the input to these card positions shall be identified as: VD-1-1G, VD-1-2G, VD-1-3G, and VD-1-4G. The remainder of the detector wiring shall be identified in a similar manner. The pedestrian detector isolator cards outputs shall be identified as: Isolator position nine: PD-1-1 and PD-1-2, the inputs: PD-1-1W and PD-1-2W. The other isolator shall be identified similarly using PD-2-, etc.

17.0 MECHANICAL CONSTRUCTION OF ENCLOSURES. (Also in TCS 36)

The cabinet shall be constructed of sheet or cast aluminum alloy.

17.1 SHEET ALUMINUM.

The sheet aluminum alloy shall be ASTM No. 5052-H32 or equivalent, and shall have a minimum sheet material thickness of approximately 1/8 inch.

17.2 CAST ALUMINUM.

The cast aluminum alloy shall be ASTM No. 356-75 or equivalent. Flat cast surfaces exceeding 12 inches in both directions shall be a minimum of 1/4 inch (0.25 inches) in thickness. Flat cast surfaces not exceeding 12 inches in both dimensions shall be a minimum 3/16 inch (0.1875 inches) in thickness.

17.3 OUTLINE DIMENSIONS.

Outline dimensions shall be as shown in Table 18A-7. All dimensions are outside of cabinet and in inches exclusive of hinges, handles, overhang(s), vent housing and adapters. Cabinet heights are measured to the lowest point of the top surface of the cabinet. The combined overhangs of the top of the cabinet shall not exceed 4 inches. Type 4 cabinets will be a combination of an empty, Type 2 cabinet or a meter base cabinet on bottom and a Type 2 or 3 cabinet on top.

TABLE 18A-7

CABINET DIMENSIONS

CABINET TYPE	WIDTH	HEIGHT	DEPTH
2 (14-06-1440)	22 (-0 + 15%)	45 (-0 + 10%)	15 (-0 + 15%)
3 (14-06-1450)	22 (-0 + 15%)	45 (-0 + 10%)	15 (-0 + 15%)
5 (14-06-1480)	30 (-0 + 10%)	46 (-0 + 18%)	16 (-0 + 15%)
6 (14-06-1485)	38 (-0 + 10%)	52 (-0 + 15%)	24 (-0 + 15%)
7 (14-06-1492)	38 (-0 + 10%)	72 (-0 + 15%)	24 (-0 + 15%)

17.4 FINISH AND SURFACE PREPARATION.

17.4.1 Painted Aluminum Cabinets (When specified).

The color shall be medium green, OAAA #144. The surfaces of the cabinet shall be suitably prepared prior to priming. Unpainted interior surfaces shall be permissible in aluminum cabinets. Exterior surfaces shall be primed and painted to provide a durable exterior finish. If the primed surfaces are scratched or damaged, the affected area shall be re-primed prior to painting.

17.4.2 Unpainted Aluminum Cabinets (Shall be provided unless otherwise noted).

Unpainted aluminum cabinets shall be fabricated from mill finished material and shall be cleaned with appropriate methods that will remove oil film, weld black, mill ink marks and render the surface clean, bright, smooth and non-sticky to the touch.

17.5 SHELVES.

Cabinets shall be provided with a minimum of one shelf in Types 2 and 3, two shelves in Types 5 and 6, and three shelves for Type 7 to support control equipment. Types 2 and 3 cabinets shall have provisions for positioning the shelf between 10 inches from the bottom and within 8 inches from the top. Types 5, 6, and 7 cabinets shall have provisions for positioning shelves between 24 inches of the bottom of the cabinet and to within 8 inches of the top of the cabinet in increments of not more than 2 inches. The adjustment of the shelves shall be accomplished by using small hand tools. Rivets are not acceptable. All shelves shall have a raised back edge to stop equipment from passing the back edge of the shelf. This edge shall be a minimum of 1/2 inch from the rear wall of the cabinet and be constructed from one continuous piece of metal.

All cabinets shall have a 1-1/2 inch drawer, mounted directly beneath the lowest shelf. This drawer shall have a hinged top cover and shall be capable of storing documents and miscellaneous equipment. The drawer shall open and close smoothly. Drawer dimensions shall make maximum use of the available depth offered by the cabinet and controller shelf, and shall have approximately the same width as the corresponding back panel. The bottom of the drawer shall have drain holes sufficient to drain any amount of accumulated water in the drawer.

17.6 TOP SURFACE CONSTRUCTION.

Cabinets shall be manufactured to prevent the accumulation of water on its top surface and slope in a manner to drain water to the back side of the cabinet. The highest point of the top surface shall be limited to a maximum of six (6) inches added to the overall height of the cabinet.

17.7 DOORS.

17.7.1 Main Cabinet Door.

Cabinets shall have a single hinged main door which permits access to all equipment within the cabinet and visual inspection of all indicators and controls. Unless otherwise specified, the door shall be hinged on the right side of the cabinet as viewed from the outside facing the cabinet door opening. Type 4 cabinets shall have two main doors equally dividing the height of the cabinet front with clearances at top, middle, and bottom.

17.7.2 Hinges.

All cabinet doors shall incorporate suitable hinges utilizing stainless steel hinge pins. Hinges shall be protected to prevent being removed or dismantled when cabinet door is closed. Attachment to the cabinet shall produce a smooth finish, protruding fasteners are not acceptable.

17.7.3 Door Stop.

Each cabinet shall be provided with a door stop which holds the door open at positions of $90° \pm 10°$ and $170° \pm 10°$. A means shall be provided to minimize accidental release of the door stop. Type 7 cabinets shall have the door stop located at the bottom of the door and all other cabinets shall have the stop located at the top of the door.

17.7.4 Locking Mechanism.

All cabinets shall incorporate a main door lock constructed of nonferrous or stainless steel materials, which shall operate with a traffic industry conventional #2 key. A minimum of one key shall be included with each main cabinet door lock.

A three - point lock on the strike edge of the door shall be provided with all types of cabinets except when specified to be different on the order or plans. The three (3) points of the lock shall be located at the top, bottom, and middle of the strike edge of the door.

The lock shall prevent operation of the mechanism when in the locked position.

The door handle shall rotate inward from the locked position so that the handle does not extend beyond the perimeter of the door at any time. The operation of the handle shall not interfere with the key, police door or any other cabinet mechanism or projection. The handle shall have the mechanical strength to operate the mechanism and shall be made from non-corrosive material.

Cabinets with three-point lock shall be provided with a means of externally padlocking the mechanism. A minimum 3/8 inch diameter lock shackle shall be accommodated. The lock shaft shall be 5/8 inches in diameter.

17.7.5 Door Opening.

The main door opening of all cabinets shall open on and be centered within the front side having the width dimensions listed in the previous table and shall be at least 69% of the area of the side. Necessary clearances shall be provided allowing unrestricted movement of the door from closed position to open position. The door shall seal against a minimum of one inch wide neoprene sponge gasket with tight seams. The top gasket shall be the width of the door, the side gaskets shall begin below the top gasket and the bottom gasket shall be within the side gaskets. A gasket retaining ring shall be installed on the inside of the gasket.

17.7.6 Police Compartment.

A hinged police compartment door shall be mounted on the outside of the main cabinet door. The door shall permit access to a police panel compartment for operation of switches defined elsewhere in these standards. The compartment shall be constructed to restrict access to exposed electrical terminals or other equipment within the cabinet. The door shall seal against a neoprene sponge gasket in the same manner as stated above for the main door.

Space shall be allowed for the switch controls and storing of the manual control cord in the police panel compartment with the door closed. The minimum internal dimensions shall be 3-1/2 inches high, 6-3/4 inches wide and 2 inches deep. Additionally, the volume shall be not less than seventy (70) cubic inches.

Police doors shall be equipped with a lock which can be operated by a police key, Corbin Type Blank 04266, or equivalent. A minimum of one key shall be included for the police compartment of each cabinet.

The police compartment shall be located above the bottom of the main door as shown in the following table:

TABLE 18A-8

POLICE COMPARTMENT LOCATION

CABINET TYPE	LOCATION
2 and 3	2.5" ± 10% from bottom and left of center, see Drawing #18A-1
5	30" ± 10%
6 and 7	39" ± 10%

17.8 CABINET MOUNTING.

17.8.1 Pole Mounted Cabinets, Types 2 and 3.

The cabinets shall be provided with provisions to attach a pole bracket to a reinforcement plate permanently mounted to the back, top, and center of the cabinet. The reinforcement to the cabinet shall be designed to support the weight of the cabinet and the equipment intended to be contained within and the structural loads referred to in this specification. The minimum width of the adapter shall be six (6) inches wide and three (3) inches high, tolerance of both -0 inch, +6 inches. Two 3/8 inch holes shall be drilled through the cabinet, within the reinforced area, 2 inches from center line of the width of the cabinet. Countersink each hole on the outside of the cabinet for flat head screws. Install two 5/16" flathead screws in the mounting holes with the top of the screw heads to be flush with the surface of the cabinet wall.

The cabinet shall be pre-drilled for two (2), 3 inch wire entrance holes, one in the top and one in the bottom, both at the back edge and centered on the width of the cabinet and one (1) 2 inch entrance hole adjacent to the 3-inch hole on the bottom as shown in the attached drawing. Three hubs shall be provided with Types 2 and 3 cabinets. The hubs shall centered on the entrance holes and attached to the cabinet using four (4) 5/16 inch-18-tpi by 1-1/2 inch long hex head bolts, with lock washers and hex nuts. The hubs and cabinet shall be pre-drilled for mounting the hubs to the cabinet with the above mentioned bolts using a bolt pattern of 2-1/8 inches centered on a line perpendicular to the back of the cabinet, by 3-3/4 inches parallel to the back of the cabinet. The centers of the bolt pattern on the hub and the wire entrance hole shall coincide. The location of the hubs shall allow minimum clearance for box end wrenches to fit onto the nuts within the cabinet.

17.8.2 Pedestal mounted cabinets, Type 2 or 3.

When specified on the order or plans the requirement for a pedestal mounted cabinet shall meet the following requirements. The specified cabinet shall be provided and equipped with a reinforced bottom, 1/4" aluminum plate, and a slip fit adapter for attachment to a standard 4-inch inside diameter pipe. The bottom of the cabinet shall be provided with an access hole for cable (min. 4 inches) and mounting holes for the adapter located in the center of the bottom. The adapter shall be bolted to the cabinet with 5/8" bolts and fitted on a 6-1/2" bolt circle. The attachment to the standard 4-inch pipe shall be secured with four (4) square headed set screws.

The holes drilled for pole mounting hardware and wiring shall be covered with gaskets and blank hubs.

17.8.3 Base mounted cabinets, Types 5, 6, and 7 (types as specified on order or plans).

The cabinet or its base adapter shall be so constructed that it can be mounted on the foundation shown in Figure 18A-2.

The interior anchor brackets shall transverse the cabinet. Each bracket shall attach to one edge adjacent to the bracket. The strength of the bracket shall prevent the cabinet from being lifted from the concrete base with a load of fifty (50) pounds acting at the top, front or back of the cabinet.

17.8.4 Anchor bolts.

Anchor bolts for base mounted cabinets shall be 3/4 inch diameter and 16 inches long. A 90° bend with a 2-inch leg on one end and a minimum of 3 inches with a UNC-10 thread shall be provided. Anchor bolts shall be steel with hot dipped galvanized finish. Each anchor bolt shall be furnished with one (1) 3/4 inch UNC-10 HDG steel nut and one (1) 3/4 inch HDG flat steel washer. Two (2) anchor bolts shall be provided with each cabinet.

17.9 CABINET STRUCTURAL TESTS (mounting shall withstand the following):

17.9.1 Hinges and Door.

The hinge and door assembly shall be of sufficient strength to withstand a load of 30-pound-per-vertical-foot of door height. This load shall be applied vertically to the outer edge of the door when it is opened to the 90 degree position. There shall be no permanent deformation or impairment of the door, locking mechanism, or door seal function after the load is removed. A stiffener shall be installed the width and at mid height of the door. The door panel shall be flat after fabrication.

17.9.2 Door Stop.

Both the door and door stop mechanisms shall be of sufficient strength to withstand a simulated wind load of 5 pounds per square foot of door area applied independently to the inside and outside surfaces without failure, permanent deformation, or any major movement of the door positions. For test purposes, a test load shall be applied to the vertical midpoint of the outer edge of the door at a right angle to the plane of the door. The test load shall equal one half of the calculated wind load. The force shall be applied first on the inside edge, then on the outside edge. These tests shall be performed with the door at 90degree and 170 degree positions.

17.9.3 Lock.

The door handle and associated cabinet locking mechanism shall withstand a torque of 100-foot lbs. applied in a plane parallel with the door to the handle in the locked position. The

door handle and the external padlock mechanism shall meet the same requirement without the internal locking mechanism securing the handle.

17.9.4 Shelves and Drawer.

Shelves shall support a load equivalent to 2 pounds per inch of length without deforming more than 1%. The test load shall be applied at two points, 6 inches to each side of the shelf's center, with the shelf installed in the cabinet. The drawer shall support up to 50 pounds in weight when fully extended.

17.10 EQUIPMENT PROTECTION.

Cabinets are intended to provide protection for the housed equipment. Prying open or dismantling the doors, walls, or tops, shall be prevented with the cabinet securely closed.

When completely and properly installed, cabinets shall have provision for rain water drainage. The cabinet shall not permit water to enter the equipment cavity above any live part, insulation, or wiring.

17.11 RAIN TEST.

All cabinets shall be designed to meet the requirements of the following tests. To insure realistic testing, the enclosure and enclosed equipment shall be mounted as intended for use.

A continuous water spray, using as many nozzles as required, shall be applied against the entire top and all exposed sides of the enclosure for 10 minutes at a minimum rate of 18 inches per hour of equivalent rain at an operating pressure of 4 to 5 pounds per square inch. The distance of the nozzles to the cabinet shall be a minimum of 36 inches and a maximum of 48 inches and located above the top edge of the cabinet.

The enclosure is considered to have met the requirement of this test if there is no significant accumulation of water within the enclosure and no water is visible on the live parts, insulation materials, or mechanism parts.

A rain test which is performed in accordance with Underwriters Laboratories, Inc., "Rain Tests of Electrical Equipment, Bulletin of Research #23, September, 1941", is considered to be equivalent to this test.

17.12 AUXILIARY EQUIPMENT.

17.12.1 Fan and cooling system.

All cabinets shall be equipped with a cooling system of sufficient capability to pass the test described in NEMA TS1-2.2.04. The fan shall be capable of operating continuously for a minimum of 6000 hours in a 122°F (50°C) environment without need for after-installation maintenance and deliver 100 CFM in free air. The fan shall be thermostatically controlled by

switching the 120 VAC supply to the fan. The thermostat shall be field adjustable to switch on and off at any temperature between 70° and 160°F.

The exhaust shall be vented through the upper portion of the cabinet. All ventilation shall be rain-tight and shall prevent any water from dripping into the cabinet.

The cooling system shall be constructed to allow cleaning of the vents, screens and fan. Fasteners for removing panels to gain access to perform the above requirement of cleaning shall be removable with the use of simple hand tools, except as noted in Section 17.12.2.

An additional duplex receptacle (for use with communications modems) shall be mounted and wired in the upper left side of the cabinet assembly. This receptacle shall be wired on the load side of the 20 amp circuit breaker.

17.12.2 Air Filter.

The cabinet shall be equipped with a secured, replaceable filter for the incoming ventilation air. The air filter shall be removable without the use of tools. The filter size shall be: 7-1/2 inches high x 7 inches wide x 1 inch deep for the Types 2 and 3 cabinets, 10 inches high x 20 inches wide x 1 inch deep for the Type 5 cabinets, and 14 inches high x 25 inches wide x 1 inch deep for Types 6 and 7 cabinets. The filter shall have clearly indicated on it the size and direction of air flow. A metal grid shall be on both sides of the filter. The filter shall meet ASHRAE standard 52-76 for disposable, Type II, glass fiber air filters. The air resistance shall be 0.08 inch WC, measured on 24 inches x 24 inches sample at 300 FPM. The efficiency of the filter shall be a minimum of 75 percent.

17.12.3 Cabinet Light.

A fluorescent bulb and fixture shall be installed in cabinet Types 2 and 3. The fixture shall be mounted against the cabinet top and the strike edge for the door. The fixture shall not extend beyond the strike edge at the top of the cabinet and shall not restrict the opening of the door. Mounting supports shall be on the front of the cabinet. The fixture shall have an on/off switch mounted on the side of the fixture. The fluorescent bulb shall be a F8T5WW.

A fluorescent bulb and fixture shall be installed in cabinet Types 5, 6, and 7; and when specified in other cabinets. The fixture shall be within the upper 3 inches from the top and toward the door side of the cabinet. It shall illuminate the interior of the cabinet without hampering the vision of service personnel while inspecting the cabinet. The fluorescent bulb shall be a 15 watt, T-12, 18 inches in length. The fixture shall be of a sturdy construction to hold and operate the above mentioned bulb. For Types 5, 6, and 7, the cabinet light shall be turned on when the cabinet door is opened and turned off when the cabinet door is closed.

17.12.4 Cabinet Hubs.

The hubs for the cabinets shall be cast aluminum, ASTM B-108 and those standard specifications referenced therein. The bolt pattern shall be as detailed in the Figure 18A-1. The

blank shall be a flat plate, 1/4 inch thick. All other hubs shall have a conduit threaded collar that shall be a minimum of 2 inches from the base of the hub. The threaded opening shall be centered within the 3-3/4 inches dimensions of the hub with outside edge of the threaded collar in line with the base of the hub. All hubs shall be provided with stainless steel bolts casted into the hub. The outside of the hub shall provide a smooth design. On the hubs with larger threaded collar(s), the bolting pattern shall be maintained. The following table describes the designations and type of hubs that will be specified on the order or plans.

TABLE 18A-9
CABINET HUB DESCRIPTION

TYPE	OPENING(S) SIZE	OPENING DESCRIPTION
Blank	-0-	no opening, flat plate, 1/4" minimum thickness
Single	3/4 in.	one opening, 3/4" conduit thread
Single	1 in.	one opening, 1" conduit thread
Single	1-1/2 in.	one opening, 1-1/2" conduit thread
Single	2 in.	one opening, 2" conduit thread
Single	2-1/2 in.	one opening, 2-1/2" conduit thread
Single	3 in.	one opening, 3" conduit thread
Double	3/4 in.	two openings, 3/4" each conduit thread
Double	1 in.	two openings, 1" each conduit thread

17.12.5 Clamp Pole Mounted Cabinet.

A pole clamp shall be provided with the controller cabinet, Types 2 and 3 for mounting the cabinet to the pole. The clamp shall be cast aluminum meeting the requirements for the cabinets and designed to hold the weight of the mentioned cabinets and the equipment contained within. The design shall provide four contact points with the pole and shall be adjustable for pole diameters from 10 inches to 12 inches. The clamp shall be divided into two parts, one half to be attached to the cabinet and the other half to be installed on the "back" side of the pole. The clamp shall have a slotted opening for coupling the clamp together using 5/8-inch galvanized all thread bolts and nuts. The clamp shall have a flat surface area, 4-1/2 inches x 2 inches minimum that attaches to the cabinet. Two (2) 5/16 inch - 18 tpi, drilled and tapped holes spaced 4 inch center to center shall be centered within the flat area. The flat area shall space the back of the cabinet a minimum of 2 inches from the pole.

17.12.6 Adapter Pole Mounted Cabinet.

When specified, an adapter shall be provided, excluding lag bolts or steel bands. The adapter shall be conformable for mounting to round poles with a 4-1/2 inches or larger diameter.

Material for the adapter shall be comparable with aluminum alloy 6061 and have the mechanical strength to hold the weight and loading requirements for the cabinet. The adapter shall accommodate lag bolts up to ½ inch and steel banding up to 1 inch wide. The adapter shall have the same mounting bolt pattern and wire way requirement as the hubs stated in Section 17.12.4. The adapter shall be mounted to the cabinet using the same mounting bolts as the hubs, and additional gaskets shall be used between the cabinet, hub, and adapter.

17.12.7 Adapter Slip-fit, 4-Inch pipe.

The adapter shall slip-fit to a standard 4-inch pipe and shall secure to the pipe with four (4) square headed set screws. The adapter shall be made of cast aluminum or steel designed to hold the weight of the cabinet and the loading characteristics required for the cabinet. The length of the adapter shall be approximately 8 inches long. The adapter shall be attached to the cabinet with 5/8-inch bolts and fitted on a 6-1/2-inch bolt circle.

18.0 CABINET INTERIOR PANELS.

18.1 GENERAL REQUIREMENTS.

All panels shall be made from structural grade sheet aluminum equal to 2024 or 5052 aluminum alloy. Approval from the Department is needed if different material than listed above is used for the panels. The panels shall be attached to the cabinet walls with bolts, nuts, and washers specified elsewhere in this standard. Each panel shall be completely removable or capable of folding down from the cabinet wall without the need to remove any other panel or shelf so that inspections and repairs may be made behind each panel. All panels shall be grounded to the cabinet using a braided copper conductor equaling #6 AWG. All panels shall be sized to fit within the minimum dimension of the cabinet it is specified for as listed in Table 18A-7.

18.2 GENERAL WIRING DESIGN REQUIREMENTS.

The inspection and repair of any panel shall not require disconnecting or removing wires. When multiple panels are required in the cabinet then the cable shall follow a single route and shall be from the detector/auxiliary panel to back panel to power panel to police panel. Cabling shall conform to the previously stated requirements for servicing each panel. Cable(s) shall be secured to the panels at the point where it leaves and/or enters each panel. The cable shall be secured to the cabinet wall with a cable clamp at two (2) points equally spaced between the panels on the above stated route. Wiring requirements for ventilation, temperature monitoring, and cabinet lighting shall be from the power panel to each device and shall be neat and in accordance with good wiring practices. A separate, parallel cable route shall be used from the field terminal to the back panel solid state load relay outputs.

18.3 IDENTIFICATION OF COMPONENTS, TERMINALS, AND CONNECTORS.

Each terminal position, sockets, switches, filters, relays, and fuses shall be permanently labeled by painting, printing or engraving directly onto the panel or terminal strip identifying the

position number and/or function of the terminal or device (paper labels of any type will not be accepted). Each harness shall be permanently labeled to identify function or connector with only the following:

TABLE 18A-10
HARNESS LABELS

HARNESS	LABEL	HARNESS	LABEL
NEMA Connector A	"A"	Conflict Monitor	"CMA"
NEMA Connector B	"B"	Conflict Monitor	"CMB"
NEMA Connector C	"C"	All Harnesses	Labeled with function
Controller Connector D	"D"	Additional harnesses may be identified later.	

18.4 IMPLEMENTATION OF EQUIPMENT CAPABILITIES.

The wiring between the panels shall connect the functional inputs and outputs needed to implement the operational capabilities of the equipment and requirements of this standard. Input circuits to the controller for external controls shall not be wired: i.e.; hold, omit, force off, CNA I&II, control status bids, phase next, phase on, phase check, red omit, pedestrian recycle, max I&II, max inh. There shall be no discrete circuit, components or active devices attached to any panel or cabinet wall except as specified. Printed circuit boards are not allowed on any panel.

18.5 BACK PANEL.

The back panel shall be located on the lower half of the back cabinet wall. The controller and conflict monitor harnesses shall be terminated on the upper portion and shall be secured to the top left corner of this panel with non-chafing cable clamps as described elsewhere in this standard. All wires shall be installed for the D and E connector functions listed in the appendix, between terminal positions and a receptacle on the back panel. The receptacles shall be square flange, with sockets connector, permanently mounted on the back panel, D receptacle - AMP206438-1, E receptacle - AMP2064038-1. The D connector on the harness shall be an AMP 206437-1 or an exact equivalent. An E harness connected to the Emergency Vehicle Detection System shall be provided with the EVDS equipment. The E connector on the harness shall be an AMP 206039-1 or an exact equivalent. The pins and sockets shall be gold finished. (Engineering note: EVDS equipment is specified in a separate document. All cabinets provided to DOTD shall be equipment to receive the EVDS equipment and provide the required functions as stated elsewhere in these standards.)

The wires from the controller harnesses, panel mounted receptacle, and other required devices shall be grouped by associated functions and terminated individually at a position on a terminal strip, (example - all inputs, by cycle, offset ... etc.). The terminal blocks and cabling for each harness shall be separate and have no wires crossing others from a different harness. Each

terminal position shall be permanently identified with the associated function in the connecting equipment. Wiring to this panel from other equipment specified elsewhere in this specification shall be given extra lengths to allow movement between controller terminal positions for field changes.

All harnesses shall be 5 feet long from the point that is held by the cable clamp to the connector on the free end. The connector on the free end of the harnesses shall be a designated connector by the manufacturer. Any additional connectors and harnesses necessary to implement the controller and system operations specified herein shall be supplied by the manufacture meeting this standard.

For Types 2 and 3 cabinets, the panels shall be constructed in accordance with LA DOTD drawings #18A-3. The harnesses for Types 2 and 3 cabinets shall be 3 feet long from the point that is held by the cable clamp to the connector free end.

18.5.1 Connectors.

Controller and monitor harnesses shall utilize Mil-C-26482 Series 1 and AMP CPC type series 2 connectors. The controller harness connectors shall be as described elsewhere in this standard. The monitor harness connectors shall be as follows:

TABLE 18A-11
MONITOR CONNECTORS

MONITOR Number of Channels	CONNECTOR
6	MS 3116F-22-55SY
12 Connector A	MS 3116F-22-55SZ
12 Connector B	MS 3116F-16-26S

18.5.2 Harness Wire Termination.

The monitor's signal input channels and voltage monitoring circuits shall be terminated on the appropriate terminals. The following shall be terminated at one position in all cabinets: harness wiring listed in NEMA-TS-1, Section 13 except as noted above, each input and output of the load switches, input and output of the controller, and the output of the flash transfer relays. The terminal blocks shall be either single row feed-through or double row type (electrical requirements described elsewhere in this standard). Exceptions to the requirement for single position termination for each wire are AC-, chassis ground, logic ground and flashing outputs. Listed below are the minimum terminals required for each:

a. Logic Ground - Three (3) adjacent positions
b. AC- - a separate copper or brass multi-terminal bus bar shall be mounted near the lowest portion of the panel, adjacent to and horizontally aligned with the signal field terminals. It shall be insulated from the cabinet and

connected to AC- on the power panel with a single #6 AWG insulated wire. The bus bar shall be sized to accept 5 - #14 AWG solid wires at each terminal and shall have a minimum of 12 positions. This bus shall be used to terminate all the neutral circuits from cable wired to the signal heads.

c. Flashing outputs - each circuit of the transfer relay shall have different flashing circuits.

All terminations shall be grouped by function as listed in NEMA TS-1 Standards, Section 13, Tables 13-1 and 13-2. The signal load switch inputs shall be terminated below all other controller and monitor harness termination.

Panels for cabinet Types 2 and 3 shall only have terminations of all voltage, monitoring, and coordinator circuits of the controller. The controller load switch controls shall be wired to the load switch receptacle and other requirements shown in drawings #18A-3. A single harness shall contain the circuits for A and B connectors. The connectors shall be offset along the end of the harness by 6 inches. Load switches shall be provided as follows: eight (8) switches, four phase, two (2) overlaps, two (2) pedestrians (Additional details shown on drawing #18A-3).

Panels for cabinet Type 5 shall have the phase overlap outputs "A" and "B" shall be wired respectively to load switches 5 and 6. Pedestrian outputs for phase 2 and 4 shall be wired to load switches 7 and 8 respectively.

Type 6 cabinets shall have overlap outputs "A" through "D" wired respectively to load switches 9 through 12. Wiring shall be arranged on the back panel to facilitate connecting the pedestrian outputs to the load switch inputs by moving wires, without adding wire, connectors, or terminal blocks.

(Engineering Note: The only controller outputs and load switch inputs circuits that are to be terminated on terminal strips are those circuits used for overlap and pedestrian indications. In accordance with the specification these circuits shall be provided to change the inputs of these load switches from either overlap or pedestrian outputs. In addition this will allow the reset circuit for pedestrian isolator cards to be terminated with the correct controller output. This requirement shall be for both the Type 5 and 6 cabinets. In reference to logic ground within the cabinets this notation shall apply to all circuits. All reference to logic ground shall be through connector "A" of the controller. In cases where specific controls are used in connector "D", then logic ground of this harness may be used. In all cases logic ground through any connector shall be the same reference within the controller.)

When specified on order or plans, overlaps shall be terminated at different positions than specified above.

18.5.3 Load Switches and Flash Transfer Relays.

Signal load switches shall be provided, one for each phase and each overlap. When specified, additional positions and load switches shall be provided for four pedestrian signals in

line with the load switches previously specified. All flash transfer relays shall be located on the back panel, adjacent to the load switches. A solid state flasher shall be provided and located as stated below.

The position of the load switches, flashers, and transfer relays shall be between the terminals for the load switch inputs and outputs. In Types 2 and 3 cabinets the position of the load switches, flashers, and transfer relays shall be in accordance with drawings #18A-3. The area above the load switches and flasher shall be open to allow the ventilation to flow freely away from the load switches.

The AC+ for the signal load switches shall be terminated as previously specified and be capable of carrying 60 amps, equally distributed to each signal load switch from a terminal strip on the back panel.

The transfer relays shall be operated directly by the voltage to transfer the signal operation from sequential to flashing. No intermediate relay shall be used between the transfer relays and signal operate/flash circuit. The transfer relays shall be energized during normal operation to connect the signal load switches to the field terminals.

18.5.4 Signal Field Circuits.

The output from the load switches shall be located on the lowest terminal strip at the bottom of the back panel. Wiring from the signal heads shall be terminated separately for each indication and there shall be no internal cabinet wiring terminated on the same terminal. The inputs and outputs of the flash transfer relay shall be terminated above and adjacent to the load switch outputs. The arrangement of these terminal strips shall allow the selection of either red or yellow signal indications to flash without needing to un-solder or solder connections. The number of signal circuits which will be transferred to flashing circuits shall equal the maximum number of load switch positions specified. No wiring shall be installed on the terminal for the field wiring.

18.6 POWER PANEL.

The power panel shall be mounted on the lower right inside of the cabinet. It shall receive a single phase, 120 VAC, 60 Hz electrical service and shall have three (3) separate terminals for terminating the wires from the service source. This panel shall provide the power required and necessary functions, including cabinet ground, to each panel. The service terminals shall be a mechanical compression type, sized to accept a wire range from #8 to #2 AWG, stranded wire. A ground bus bar shall be located on the lower portion of this panel and terminate all ground circuit within the cabinet. All ground circuits shall be designed for a single path to the ground bar and no ground loops shall be created. The ground bus bar shall be a separate copper or brass multi-terminal bus bar. It shall be mounted directly to the panel and connected to chassis ground input terminal with a single #6 AWG green insulated wire. The bus bar shall be sized to accept 5 - #14 AWG solid wires at each terminal and shall have a minimum of 12 positions. This bus shall be used to terminate all the ground circuits from cable wired to the

signal heads. All internal ground wiring to this bar shall be on one end using a maximum of 4 positions.

The power panel components for Types 2 and 3 cabinets shall be incorporated on the back panel. Both neutral and ground bus bars shall be located conveniently for installing field wiring. All other requirement mentioned above shall be adhered to. Switches shall be located for easy reach and away from energized parts. (Details shown on drawing #18A-3)

18.6.1 Control Switches.

The following switches shall be located on the power panel and shall perform the functions listed below and labeled as shown:

a. Cabinet light - ON/OFF - this switch shall control the AC+ to the cabinet light specified elsewhere in this standard. For Types 2, 3, and 4 cabinets the switch shall be part of the fixture.
b. Test - FLASH/AUTO - The "flash position" of this switch shall allow the signal indications to flash and the control equipment to cycle in its normal manner. The "auto" position will not affect the normal operation of the equipment.

18.6.2 Breakers.

Breakers shall be provided in each type of cabinet. The AC+ power shall have one input and shall be bussed to three (3) separate circuits. The breakers shall be a single pole, molded case, screw mounted on this panel with two (2) #10 screws on a 4-1/2-inch pattern. Each breaker shall indicate visually that the breaker has been tripped. The following are the functions and labels for each breaker:

a. Controller power - ON/OFF - this shall be rated for ten amps and control the AC+ power to the controller and conflict monitor. (filtered and suppressed)
b. Main Power - ON/OFF - this shall be rated for 60 amps and control the AC+ power into the cabinet for all equipment. The power for the auxiliary circuits shall not be controlled by this switch.
c. Detector Panel Power - ON/OFF - this shall be rated for 10 amps and control the AC+ power to the detector panel used for interconnect relay outputs. This circuit shall not be used for detector card rack and shall not be connected to the suppressor on the power panel.
d. Auxiliary Power - ON/OFF - this shall be rated for 20 amps and control the AC+ power to the ventilation fan, cabinet light, and convenience outlet. (filtered)

18.6.3 Surge Protection and Filtration.

The power for the control equipment shall be protected by a RFI line filter and high voltage surge arresters. The line filter shall be rated at 60 amps on each AC+ and AC- line. Terminals on the filter shall be for suppression on the main power, neutral, and ground; and separate terminals for line in and out, neutral out supplying the controller and detector panel power to the breakers. The filter shall attenuate signals both from line to load and load to line. The attenuation in both directions shall be a minimum of 50 decibels over the frequency range of 200 KHz to 75 MHz. The impulse life of the protector shall be capable of operating 20 times at peak current. The clamp voltage shall be 340 volts at 20K amps and shall respond to over voltage conditions within 300 nanoseconds. The minimal capability of the protector shall be to discharge a single impulse with a wave shape of 8/20 and current to be 20K amps on each side to ground. The insulation resistance between line to ground shall be 100 mega-ohms.

18.6.4 Signal Bus Operation.

The signal bus power shall be switched individually by normally opened solid state relays rated a minimum of 60 amps, control voltage 120 VAC (Crydon series 1 - A2475 or equal). The solid state relay shall operate within the NEMA temperature range by de-rating the device and using necessary heat sinks. All switches are specified elsewhere and the circuit design shall limit the switched current to 10 amps max.

18.6.5 Convenience Outlet.

The receptacle shall be a feed through, ground fault interrupter type, 20 amps, duplex receptacle. The receptacle shall have three (3) wires from the device to the appropriate terminal on the power panel, (Ground, AC-, and AC+). The feed through shall supply power to the fan and light.

The convenience outlet installed in Types 2 and 3 cabinets shall be mounted on the door. The electrical details shall meet the following requirements and details in drawing 18A-3. The convenience outlet in Type 5 and above cabinets shall be mounted on the power panel.

18.6.6 Power Panel Isolation.

A clear, non-breakable, 1/4-inch Lexan insulating cover shall be used to shield all open connections and not cover any switch, breaker levers, terminals blocks, bus bars, or convenience outlet. The cover shall be secured in place with screw fasteners and be removable by hand or simple hand tools.

18.7 DETECTOR AND AUXILIARY CONTROL PANELS.

A detector panel shall be provided in cabinet Types 3, 5, 6, and 7, and located on the left inside wall of the cabinet, except as noted for Type 3 cabinets in Section 18.7.2. The terminals and wires for detector card inputs, controller vehicle detector input test switches, remote communications, and additional functional inputs/outputs specified shall be on this panel. The

upper portion of this panel shall be used for mounting any required terminal blocks. The middle of the panel shall be for vehicle/pedestrian test button and control circuit and field wiring terminals. A six (6) position terminal block with suppressor shall be positioned on the bottom of the panel for communications. There shall be no splices in the wiring.

A separate panel shall be provided for the auxiliary controls including relay bases for interconnection controls, isolating the field circuits and the controller inputs.

18.7.1 Auxiliary Control Function (supplied with all Type 2 cabinets and when specified with any other cabinet).

This panel shall be located on the left lower inside wall of all cabinets, below the detector panel when present, and shall be separate from other panels. Relay bases shall be mounted at the top of this panel and the quantity of bases shall be supplied that will provide the functions required or as indicated on the order. The relays bases shall be wired isolating the field wiring and the controller inputs/outputs for hardwired interconnect. Field wiring will be terminated at fuse blocks, specified elsewhere in this standard. Additional wiring requirements are given below. The relay bases shall be for two-pole octal relays and have screw terminals for all relay pins. The required functions for hardwired interconnect are; resets, cycles, splits, free, flash, and remote common. Wiring from the interconnect terminations described above shall not be included with any wiring or harnesses on the detector panel.

A terminal block shall be provided below the relay bases where the following are to be terminated. Power for this panel shall be supplied by a separate breaker on the power panel. A minimum of three adjacent positions shall be provided for each AC+, AC-, and ground. This power shall be used for supplying master interconnect power and providing power to external equipment. This power shall not be used for equipment power within the cabinet. Logic common from the controller shall also be terminated on a terminal strip. Controller system operations for dials 2, 3, and 4, split 2, 3, and 4, and offset 1, 2, 3, and 4, shall be terminated on the back panel as stated within this standard. Each system operation terminal shall be wired to the front side of the terminal blocks on the back panel and terminated using a compression spade lug to the inputs of the controller. Each wire shall be identified with a sleeve marked, D-2, D-3, D-4, SP-2, SP-3, SP-4, O-1, O-2, O-3, and O-4 respectively. Two terminal positions shall be provided for free in and out, and two positions for flash in and out. Wiring shall be provided for each, one for free and one for flash, from these terminals to the terminals on the front of back panel, terminated using compression spade lugs. Each identified with a sleeve, free marked FR and flash marked FL. This panel shall conform to drawing 18A-3 of this standard.

(Engineering Note: For railroad preemption inputs, we intended to use the pedestrian isolator cards between field and controller inputs. For hardwired interconnect controls, we will move the wiring on the back panel for master or secondary operation. Similar methods of moving wires will be used to implement other required functions as needed.)

18.7.2 Detector Panel for Types 3 and 5 Cabinets.

The detector panel shall be located on the inside right wall of Type 3 cabinets and the left wall of Type 5 cabinets. The panel shall have terminal positions for the specified field input circuits. The wiring requirements stated above shall be followed. Terminals shall be provided for eight (8) vehicle and four (4) pedestrian detector input circuits.

The card rack shall follow the specified requirements elsewhere stated, however positions shall be provided for one power supply, two-four channel vehicle detector cards, and two pedestrian isolator cards. The wiring for the rack shall be formed to follow the hinge of the door without damage to the wiring.

18.7.3 Detector Panel Test Switches.

Detector test switches shall be provided on all detector panels. These switches shall be positioned in between the terminal blocks for the field wiring and adjacent to the input of the channel that the switch is for. Access to the switches shall not be interfered with wires or suppressor. Each switch shall be a momentary push button, normally open switch. There shall be a switch for each detector channel supplied in the cabinet and for each pedestrian call circuit (2 for 4-phase, and 4 for 8-phase), as per this specification, order, plans, or any addendum. Each switch shall be permanently labeled with the nomenclature of the function it provides (Ø # or Ø ##). The function of the switches shall be to place a logic ground on the controller vehicle, pedestrian, and system detector inputs. The wiring shall be terminated on the front of the back panel at the associated controller input terminal. A compression type spade lug shall be use and each wire marked with a identification sleeve as follows: VB-Ø1, VB-Ø2, VB-Ø8, PB-Ø2, PB-Ø4, etc.

18.7.4 Field Wiring - Detector and Auxiliary Panels.

The loop lead-in, pedestrian field push button shall be terminated on the sides of the detector panel, the communications shall be terminated on the bottom of the detector panel, and the interconnect and field inputs/outputs shall be terminated on the bottom of the auxiliary panel. Each channel, vehicle and pedestrian, shall be terminated at two adjacent positions for inputs. On the auxiliary panel six NON type fuse holders and one remote common terminal shall be positioned on the bottom of the panel for hardwired interconnect.

The specified lightning protection shall be connected to the designated field terminals.

18.7.5 Communication Harnesses.

All additional harnesses required for connecting the modem, line drivers, controller, master, and system hardware in addition to the specified connectors shall be provided and terminated in a fashion required by the manufacturer. Additional harnesses shall not negate any harness specific by this standard. Approval of these harnesses shall be obtained from the Department.

18.7.6 Lightning Protection.

All detector and data field wiring shall be terminated on the required terminal block. Minimum voltage clamping shall be 30 volts for both differential and common mode. Current carrying capabilities shall be 400 amps in differential mode and 1000 amps in common mode. Response time for detector protection shall be 40ns and for data lines shall be 1 to 5 ns. The devices shall be mounted to the panel and the leads terminated on each field terminal.

All 120 volt field circuits shall be protected on the equipment side of the fuse by a surge protector. Operating line voltage shall be 120VAC, peak surge trip point for 600 volts/microsecond impulse shall be less than 890 volts. Response time shall be less the 200 nanosecond at 10KV/microsecond. Surge handling ability shall be 20K amps. The device shall be mounted on the grounding stud adjacent to the protected terminal.

18.8 POLICE PANEL.

The police panel shall be located in the police compartment previously specified and provide switches which are accessible when the police compartment door is opened. The following list of switches shall be located on this panel and be wired to their appropriate circuits to provide the functions identified below:

a. Flash Control Switch - Flash/Normal - this switch shall control the signal output from the controller to cause them to flash in the "Flash" position and to initialize the controller to the start-up phase unless the conflict monitor has detected a conflict. If the monitor has placed the equipment on flash, then this switch shall be inactive. The "Normal" position of the switch shall cause no effect to the signal circuits and shall allow the control equipment to function in its prescribed manner.

b. Signal Shut-Down - On/Off - the "On" position of this switch shall allow the signals to operate in normal manner. The "Off" position of the switch shall cause the signal indications to become dark, regardless of whether the signals were flashing or operating normally and to initialize the controller to the start up phase unless the conflict monitor has detected a conflict.

c. Manual Control - Auto/Manual - All necessary wiring, (manual control enable, interval advance, logic ground) shall be routed to the panel and terminated. A switch shall be provided only when specified and switch the function of the controller from normal operation in the "Auto" position to a manual advance operation in the "Manual" position by a manual push button to advance the controller in accordance with the NEMA standards. In addition to the switch, a manual control shall be provided. The cord shall be terminated on a terminal strip attached to the back of the police panel. The cord shall be weatherproof and coiled, having a maximum retracted length of eight inches and a minimum extended length of five feet. The cord shall be attached to the panel with a cable clamp, and fitted with strain relief bushing at the point it is routed through a five-eighths

inch hole in the panel. The manual control shall be on the free end of the cord. The manual control and the connection to the cord shall be weatherproof. A hand grip shall be constructed for normal use by being held in one hand and a momentary contact switch can be activated with the thumb. This control shall be operable between the above mentioned lengths.

d. Emergency Vehicle Detection System Enable - On/Off - All necessary wiring shall be routed to the panel and terminated. A switch shall be provided to activate the EVDS when it is in the on position and the EVDS equipment is installed in the cabinet. In the off position the EVDS equipment shall be disabled and, all functions connected to the Traffic Control System Equipment shall be disabled allowing the control equipment to operate as programmed. When the EVDS equipment is not installed in the cabinet then this switch shall not effect the operation of the Traffic Control System Equipment.

The back of the panel shall have an aluminum shield to prevent personnel from accidentally coming in contact with the terminals of the switches or terminal strip. With the cover in place, it shall provide visual inspection of the back of the panel and shall not interfere with any equipment when the main door is closed.

19.0 CABINET WIRES AND WIRING.

The wiring in the cabinet shall withstand the environmental temperature range as stated in NEMA TS-1. The insulation shall remain flexible over the temperature range and will not begin melting, causing the insulation to reduce in thickness. The insulation shall meet Specification MIL-W-16878D, 105 degrees, 600V, (MIL), heat resistant, polyvinylchloride or approved equal. The wire shall be 600 volts and color coded according to the following list:

TABLE 18A-12
WIRING COLOR CODE

HARNESS	COLOR
Controller harness and wiring	Blue
Conflict monitor Harness and wiring	Red
Detector, preemptor, and interconnect wiring	Yellow
All AC+	Black
All AC-	White
All Controller Logic Ground	White/Black Stripe or White/Green Stripe
All Chassis Ground	Green

The wire shall be stranded copper and sized to carry 125% of the design current and a minimum #22AWG. All signal circuit wiring shall meet the above stated size and be a minimum of #16AWG. All circuits shall be wired using a single conductor; therefore, parallel wiring is not an acceptable method of meeting wire size requirements as stated above. The wires shall be terminated individually by a solder less compression type spade lug appropriately sized or by soldering. All wiring shall be installed having a zero tension after installation.

Wire bundles shall be held in cable form by lacing tape, spiral wrap, or plastic sheathing. The lacing tape shall be flat, braided nylon and 0.090 inch wide, equal to ICO-Rally type LTN-2. The spiral wrap shall be correctly sized to fit the wire bundle and be a weather-resistant polyethylene equal to Panduit spiral wrapping. The insulating tubing shall be clear colored and sized to fit the wire bundle, equal to Alpha PVC-105 plastic tubing. Cable ties are restricted from use on cable bundles between panels and equipment harnesses. Cable ties may be used to bundle wire on panels only. Cable ties shall be self-locking and have properly applied tension according to the manufacturer's specifications. The ties shall be weather resistant nylon equal to T & B ties (MX series).

20.0 CABINET MECHANICAL AND ELECTRICAL HARDWARE.

All hardware shall meet the environmental requirements of the controller. All fastening devices, (bolts, washers, screws, etc.), shall not rust when exposed to weather. These shall be hot dipped galvanized, stainless steel or brass. All electrical hardware shall be sealed and electrical contacts protected against moisture and corrosion.

20.1 TERMINAL BLOCKS.

Terminal blocks shall be multiple terminal, one piece, rated at a minimum of 300 VDC for all 24 VDC control circuit terminations and a minimum of 600 VDC for all 120 VAC circuits. All field terminal blocks shall be multiple terminal, one piece, rated a 600 VDC and 20 amps. Exceptions to the above requirement for 600 VDC terminal blocks used with the 120 VAC terminations are the 120 VAC terminations of the controller, monitor, and detectors, which are permitted to be terminated on a 300 VDC terminal block. Another exception is where intermixing terminal blocks would result from the above requirement then the block to be used shall be determined by the voltage of the largest number of terminations on that block. The minimum current rating of all terminal blocks shall be 15 amps unless otherwise specified. The minimum amperage for the 120 VAC termination on the power panel shall be 60 amps. Any contradiction between circuit description and hardware restriction shall be resolved by using the larger requirement specified.

In addition to the above requirements for voltage terminations a minimum size screw shall be used. The terminal blocks shall have a minimum screw of #6 for low voltage circuits for the electronic equipment and #8 for all field termination. The power terminal shall be a barrel type screw tightened lug.

20.2 WIRING TERMINALS.

All compression terminals shall be constructed with a base material of fine grade high conductive copper per QQ-C-576 and tin plated per MIL-T-10727 plating process for durable corrosion resistance against salt spray and most chemical fumes. The insulation shall be made of vinyl. The terminal shall be installed with tooling recommended by the manufacturer to meet the performance requirements of MIL-T-7928. The use of ring or spade terminals is not being precluded by the above requirement. Each terminal shall be correctly sized to fit the wire and terminal screw.

All soldered connections shall be made using the designed temperature for the solder being used and the location of the connection. The connection shall be made preventing a cold solder joint and excessive winking of the solder into the wire. The insulation of the wire shall not be damaged by excessive overheating at any point on the wire.

20.3 MULTIPLE PIN CONNECTORS.

All multiple pin connectors shall be wired in accordance with the connector manufacturer's recommendations or applicable MIL specifications. The type of connector shall be in accordance with this standard, NEMA TS-2 TYPE 2, and as listed below.

Unused sockets and pins shall not be installed in the D connector. A cable clamp designed for each connector shall be installed securely to prevent excessive strain on the wires from being transmitted to the contacts inside the connector housing.

20.4 SWITCHES.

All switches, except the detector push button test switches, shall be heavy duty toggle switches and meet the MIL-MS-35059 Series Standards, rated at 20 Amps/125 VAC. The level shall have a seal for sand, dust, and 15-foot water submersion. The terminals shall be threaded for screws and have a tinned finish. Mounting shall be by two (2) hex nuts and two (2) internal-tooth, lock washers on a 1/2-inch shank through which the toggle lever is mounted. The number of poles and lever positions shall be determined by the applications previously stated.

20.5 LOAD SWITCH AND RELAY BASES.

The load switch and the flash transfer relay sockets shall be rigidly mounted on the back panel. The insulating ridge on the front of the socket shall be reinforced with a metal mounting ring designed by the manufacturer of the socket. This ring shall be secured to the socket with a minimum of two (2) screws and the ring fastened to the panel. Both sockets shall a minimum current rating of 15 amps, individual contacts, voltage rating of 1750 volts rms, pre-grounded, or grounding pin connected to chassis ground.

All relay bases used for special circuits specified previously, and not otherwise specified, shall be rated a 300 VDC and 10 Amps. Bases shall be front-panel mounted and shall have a closed back for insulation from the panel. The socket shall be octal and wired to barrier type

terminals permanently numbered. Terminal screws shall be tinplated, #6-32 with captive nuts, and shall accept #20 to #12 AWG wire.

20.6 CABLE CLAMPS.

All cable clamps shall have a metal loop and cushion made with a general purpose neoprene. The metal shall be aluminum 20204-T4 or stainless steel per Specification MIL-S-6721, annealed (321 or 347). The neoprene shall meet AMS Specification 3209. The clamp shall be sized to grip the cable it is being used on without damaging any insulation.

20.7 FUSES AND HOLDERS.

All fuses located on the all removable electronic equipment shall be a 1/4 inch by 1-1/4 inch glass tube fuse rated at a minimum of 125 VAC. All panel mounted fuses shall be U.L. Class "H" fuses rated at 250 VAC, fast acting. Fuses shall be provided and equal to Type NON 0-30 Amps.

The fuse holder shall be constructed of a general purpose phenolic material U.L. listed for 250 VAC. The fuse holders shall have barriers on each side of the fuse and shall have a screw type terminal.

20.8 RELAY AND MOTOR SUPPRESSOR.

A suppressor shall be installed on all AC relay coils and motor inputs. The suppressor shall be a series resistor-capacitor, 100 ohms-0.1 microfarad, and rated for 600 volts.

20.9 IDENTIFICATION SLEEVES.

Identification sleeves shall be supplied on specified wires. The sleeve shall have the required identification printed or typed with a minimum size of pica-pitch 10. The sleeve shall be installed on the sire providing a self-laminating protective shield over the legend. Acceptable material shall be transparent, 3.5 mil, vinyl film with acrylic pressure sensitive adhesive. The operating temperature range shall be -40° C to 80° C. The size of the label shall provide sufficient area for the printed identification.

Application of the sleeve onto the wire shall be neat and smooth completely protecting the identification label.

21.0 TESTING.

A test(s) shall be performed on the cabinet containing the completely assembled equipment and control equipment by the manufacturer prior to shipment. Malfunctions or defects shall be corrected and the equipment retested. The complete log beginning with the first test, showing the results of the all tests, shall be delivered with the equipment. The manufacturer shall furnish certification with the documentation required in Section 24, stating that the results of the test are true and accurate and stating the name and title of the person conducting the test.

The test shall require the operation of the equipment with each signal circuit connected to an incandescent load of at least 600 watts. The equipment shall operate sequentially and continuously for at least 48 hours, as stated above, in an environment having a minimum temperature of 140°F.

The complete system, including all local controllers, cabinets, on-street master controller, and modems shall be assembled and interconnected at the point of manufacture.

The system shall be completely performance tested and a written test report submitted in the documentation required in Section 24. The Engineer reserves the right to an on-site system inspection at the point of manufacture to witness the system operation and the performance test of the system.

After installation and debugging of all central control equipment, local controllers, detectors, communications, and other system hardware and software elements, the system shall be required to complete a 30 day period of acceptable operation. The system test shall fully and successfully demonstrate all system functions using live detector data and controlling all system-controlled intersections.

22.0 TRAINING.

Formal classroom training and "hands-on" operations training shall be provided for personnel designated by this agency. The engineering, operations and maintenance training shall take place at locations within the state of Louisiana designated by this agency. The technician training shall take place at the manufacturer's facility. Classroom training shall be given for the engineering, operations and maintenance sessions.

Five (5) training sessions are required during the contract period. Three (3) maintenance sessions, one (1) engineering session and one (1) technician session shall be given. The engineering session shall provide for a maximum of twenty-five (25) people. Each maintenance session shall provide for a maximum of fifteen (15) people. The technician session shall provide for a maximum of four (4) people. Copies of course materials shall be supplied to and retained by each attendant. Training shall occur after delivery of initial order, but before one year after date of final acceptance of initial order. The manufacturer shall submit for each type of session, syllabuses to the Traffic Signal Engineer for approval before classes are scheduled.

22.1 OPERATIONAL TRAINING.

Training for the operation of the system shall include analyzing system performance and revision of system operating parameters based on the analysis. The session shall be a minimum of two (2) days and presented at an engineering level.

The training topics shall include as a minimum:

a. How to enter commands (System software, utilities, and disk management)

b. Operation of all devices
c. Generation and editing of arterial master and intersection controller databases
d. Uploading/downloading of arterial master and intersection controller databases
e. Procedure for enabling dynamic displays
f. Explanation of the communication system

22.2 MAINTENANCE TRAINING.

Training for maintenance personnel shall include detailed, field level troubleshooting and basic interrogation of the controller unit. The training shall consist of three (3) sessions. Two (2) sessions shall be remedial and one (1) session shall cover more advanced material. Each session shall be three (3) days in length. Course content shall emphasize information required to successfully pass the below specified tests.

Maintenance personnel shall be tested by the vendor as to their ability to repair and/or diagnose simulated failures, and to gather basic information about a particular controller unit (i.e., min time, conflicting and non-conflicting phases, etc.). There shall be at least ten (10) controller/cabinet configurations per session type. Cabinets, controllers and miscellaneous materials shall be supplied by the Department. Wiring and programming necessary to conduct the tests shall be performed by the vendor. The vendor shall recommend at least ten (10) simulated failures, timing schemes and other configurations to be used for each type of test. The Department shall supply the vendor with the final, approved test configurations, however, the vendor shall not be required to perform more than six (6) hours of wiring or programming in development of the test configurations.

Final test questions shall be supplied by the Department. A Department representative will be present at all time to assist the vendor in administering the test.

22.3 TECHNICIAN TRAINING.

The manufacturer shall provide a minimum of two (2), four-day sessions at their facility for a maximum of three (3) Department employees per session. The manufacturer shall be responsible for all costs associated with such training except for the cost of travel.

Training sessions shall be highly technical and include as a minimum the following topics:

a. Architecture of controller unit.
b. Controller troubleshooting to component level.
c. Cabinet wiring and troubleshooting
d. Advanced controller programming including diamond sequencing.

22.4 ENGINEERING TRAINING.

Training for engineering personnel shall focus on implementing traffic engineering data with the controller. The manufacturer shall provide one (1) two-day session for a maximum of twenty –five (25) participants.

The first day of the session shall emphasize basic operation and interrogation of the controller. The second day of the session shall emphasize implementing traffic engineering data and include, at a minimum the following:

a. Programming an actuated, coordinated controller based on intersections provided by the Department.
b. Theory and operation of volume density operation and associated programming methods.
c. Theory and operation of three- and four-phase diamond sequencing and associated programming methods.

23.0 WARRANTY.

The system equipment shall be warranted for a minimum of one year. All warranty periods shall begin at the date of acceptance by the Department.

24.0 DOCUMENTATION.

Detailed technical information on material being offered shall be supplied with the bids for equipment directly shipped to the Department and with the material submittal for equipment being installed on projects. Information shall be for all items required by this specification and on the order or in the plans.

Manuals shall be supplied for all equipment and components of the system. The manuals supplied for software, peripherals, and modems shall be from the original source. The manual shall be comprehensive, easy to use and understand, and completely descriptive of the product.

24.1 CLOSED LOOP SYSTEM OPERATION MANUAL.

a. Step-by-step system installation procedures
b. Operating instructions
c. System set-up procedures
d. Explanations and descriptions of data entry procedures
e. Menu item descriptions

24.2 EQUIPMENT MANUALS.

a. Technical descriptions
b. Operating instructions
c. Theory of operation

d. Detailed schematic diagrams
e. Assembly drawings
f. Wiring diagram
g. Troubleshooting procedures to assist the maintenance staff in the identification and isolation of malfunctions
h. Parts list

24.3 CABINET WIRING.

Complete wiring details shall be shown on the drawings. The drawings shall use the same nomenclature to identify the various components as referred to in this standard. If no name was mentioned in this standard then a reasonable nomenclature shall be used. A legend shall be provided on all drawings identifying acronyms and symbols. Two (2) drawings shall be provided with each cabinet. The DOTD specification shall be followed when supplying documentation for projects.

APPENDIX

PIN/SOCKET ASSIGNMENTS FOR D CONNECTOR ON BACK PANEL

PIN	FUNCTION
1	OFFSET 1 IN
2	CYCLE 2 IN
3	CYCLE 3 IN
4	FLASH IN
5	OFFSET 2 IN
6	OFFSET 3 IN
7	INTERCONNECT FREE
8	SPLIT 2 IN
9	SPLIT 3 IN
10	SPL FUNCTION 2 OUT (TBC)
11	COMPUTER ON-LINE
12	THREE PHASE DIAMOND SELECT
13	FOUR PHASE DIAMOND SELECT
14	RESERVED
15	RESERVED
16	EXT RESYNC INPUT
17	MASTER SELECT
18	SYNC INPUT
19	PREEMPT 1 IN
20	PREEMPT 2 IN
21	PREEMPT 3 IN
22	PREEMPT 4 IN
23	PREEMPT 5 IN
24	PREEMPT INTERLOCK
25	SYSTEM DET. 1/DETECTOR 45P INPUT
26	SYSTEM DET. 2/DETECTOR 25S INPUT
27	SYSTEM DET. 3/DETECTOR 18P INPUT
28	SYSTEM DET. 4/DETECTOR 16S INPUT
29	SYSTEM DET. 5/DET. #2b-1P INPUT
30	SYSTEM DET. 6/DET. #2a INPUT
31	SYSTEM DET. 7/DET. #1b-5P INPUT
32	SYSTEM DET. 8/DET. #1a INPUT
33-34	SPARE
35	CONTROLLER INTERLOCK DIAMOND
36	COMP. SEL 1
37	COMP. SEL 2
38	COMP. SEL 3
39-41	SPARE (DO NOT USE)
42	CABINET INTERLOCK DIAMOND
43	SPL FUNCTION 1 OUT (TBC)
44	SPLIT 3 OUT
45	SPLIT 2 OUT
46	INTERCONNECT FREE OUT
47	OFFSET 3 OUT
48	OFFSET 2 OUT
49	FLASH OUT
50	CYCLE 3 OUT
51	CYCLE 2 OUT
52	OFFSET 1 OUT
53	+24 VDC
54	LOGIC GROUND
55	CHASSIS GND
56	RESERVED
57	RESERVED

PIN/SOCKET ASSIGNMENTS FOR E CONNECTOR ON BACK PANEL

PIN	FUNCTION
1	AC +
2	AC-
3	CHASSIS GROUND
9	PREEMPT 1
10	PREEMPT 2
11	PREEMPT 3
12	PREEMPT 4
13	PREEMPT 5
15	LOGIC GROUND

DETECTOR CARD RACK MOUNTING SCHEME

TYPE 3 CABINET ONLY

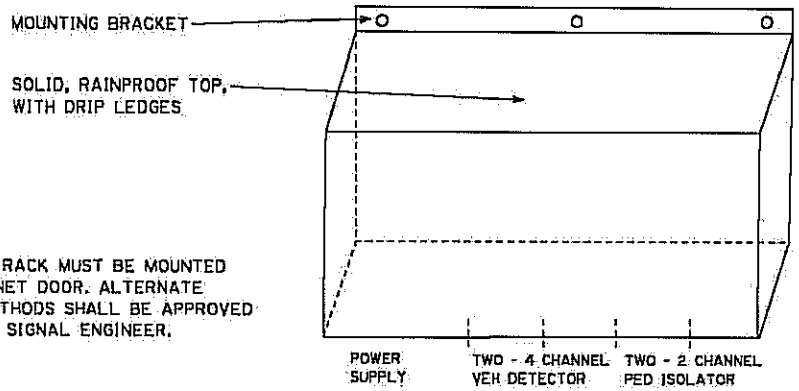

NOTE: CARD RACK MUST BE MOUNTED ON THE CABINET DOOR. ALTERNATE MOUNTING METHODS SHALL BE APPROVED BY THE DOTD SIGNAL ENGINEER.

TYPE 2 & 3 CABINET BOTTOM - PLAIN VIEW

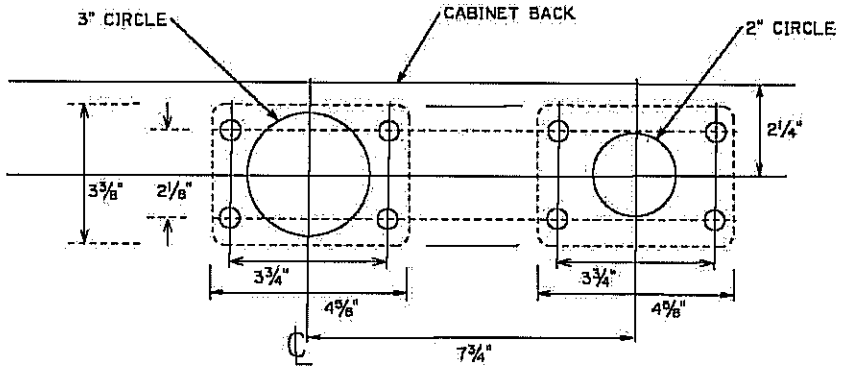

PANEL DETAIL (TYPE 3 CABINET DOOR)

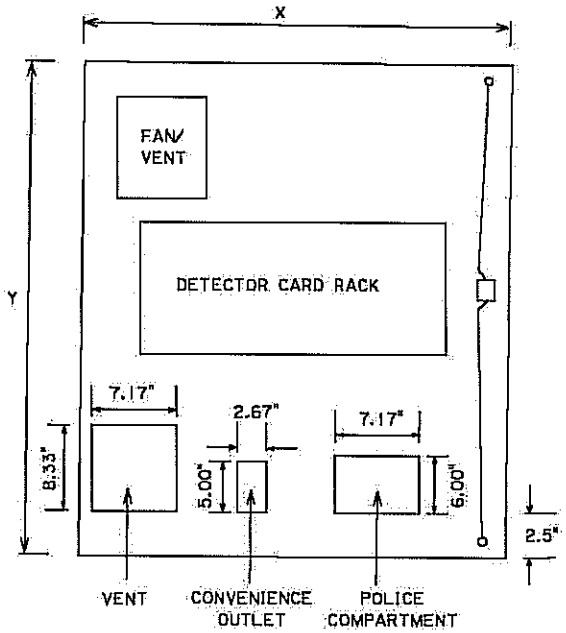

NOTES: DIMENSIONS DEFINE MAXIMUM AREA THAT SHALL BE USED BY ALL COMPONENTS AND MOUNTING HARDWARE FOR THAT DEVICE OR COMPARTMENT.

VENT, CONVENIENCE OUTLET, POLICE COMPARTMENT AND LOCK ARM SHALL BE EVENLY SPACED ACROSS THE WIDTH OF CABINET DOOR.

FOR X AND Y DIMENSIONS, SEE TCS 18A.

LOUISIANA DEPARTMENT OF TRANSPORTATION AND DEVELOPMENT
TRAFFIC CONTROL STANDARD NO. 18-A
CABINET DOOR MOUNTING SCHEME
REVISION DATE: 01/12/2008 FIGURE NO. 18A-1

CONTROLLER FOUNDATION

NOTE: FOR TYPE 5, 6, AND 7 CABINETS
D.O.T.D. – T.C.S. #18

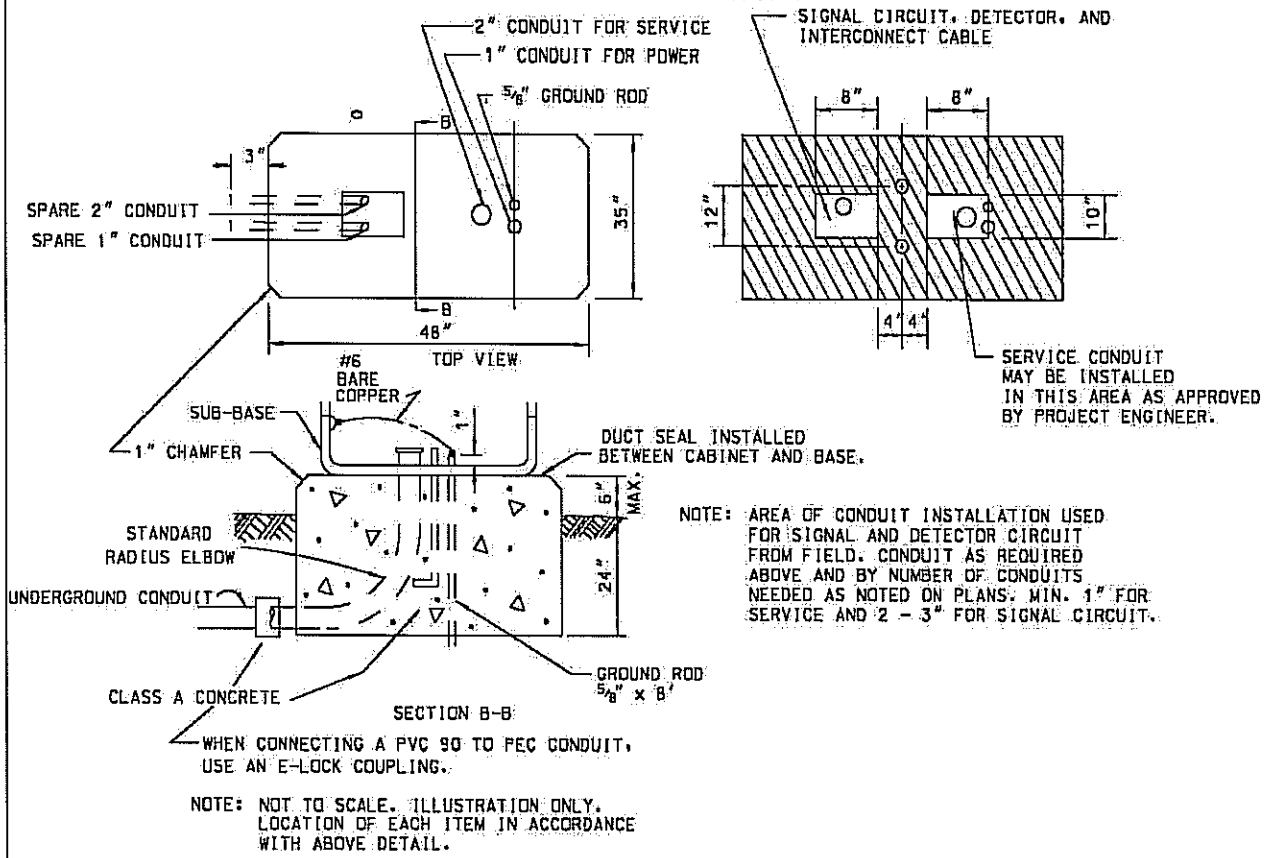

NOTE: AREA OF CONDUIT INSTALLATION USED FOR SIGNAL AND DETECTOR CIRCUIT FROM FIELD. CONDUIT AS REQUIRED ABOVE AND BY NUMBER OF CONDUITS NEEDED AS NOTED ON PLANS. MIN. 1" FOR SERVICE AND 2 – 3" FOR SIGNAL CIRCUIT.

NOTE: NOT TO SCALE. ILLUSTRATION ONLY. LOCATION OF EACH ITEM IN ACCORDANCE WITH ABOVE DETAIL.

NOTES:

1. ALL GROUND MOUNTED CONTROLLERS TO HAVE SPARE 2" CONDUIT STUBBED OUT 24" BELOW GRADE & 24" OUT FROM BACK OF CABINET IN ADDITION TO OTHER REQUIRED. CONDUITS. SPARE CONDUIT SHALL BE CAPPED.
2. ALL EXPOSED CONCRETE EDGES SHALL HAVE A 1" CHAMFER.
3. ALL CONDUIT, GROUND ROD AND ANCHOR BOLTS SHALL BE INSTALLED WITH 1"± 1/2" EXPOSED ABOVE BASE.
4. CONTROLLER FOUNDATION SHALL BE MARKED TO SHOW THE LOCATION AND DIRECTION OF ALL SPARE CONDUIT.
5. FOUNDATION SHALL BE ORIENTATED AS SHOWN ON THE PLANS. TYPICALLY, DOOR SIDE SHALL BE AWAY FROM TRAFFIC.
6. #6 AWG BARE COPPER WIRE ON GROUND ROD, ONE SIDE TO BE CONNECTED TO GROUND LUG ON PANEL.

LOUISIANA DEPARTMENT OF TRANSPORTATION AND DEVELOPMENT
TRAFFIC CONTROL STANDARD NO. 18-A
CONTROLLER FOUNDATION
REVISION DATE: 01/12/2008 FIGURE NO. 18A-2

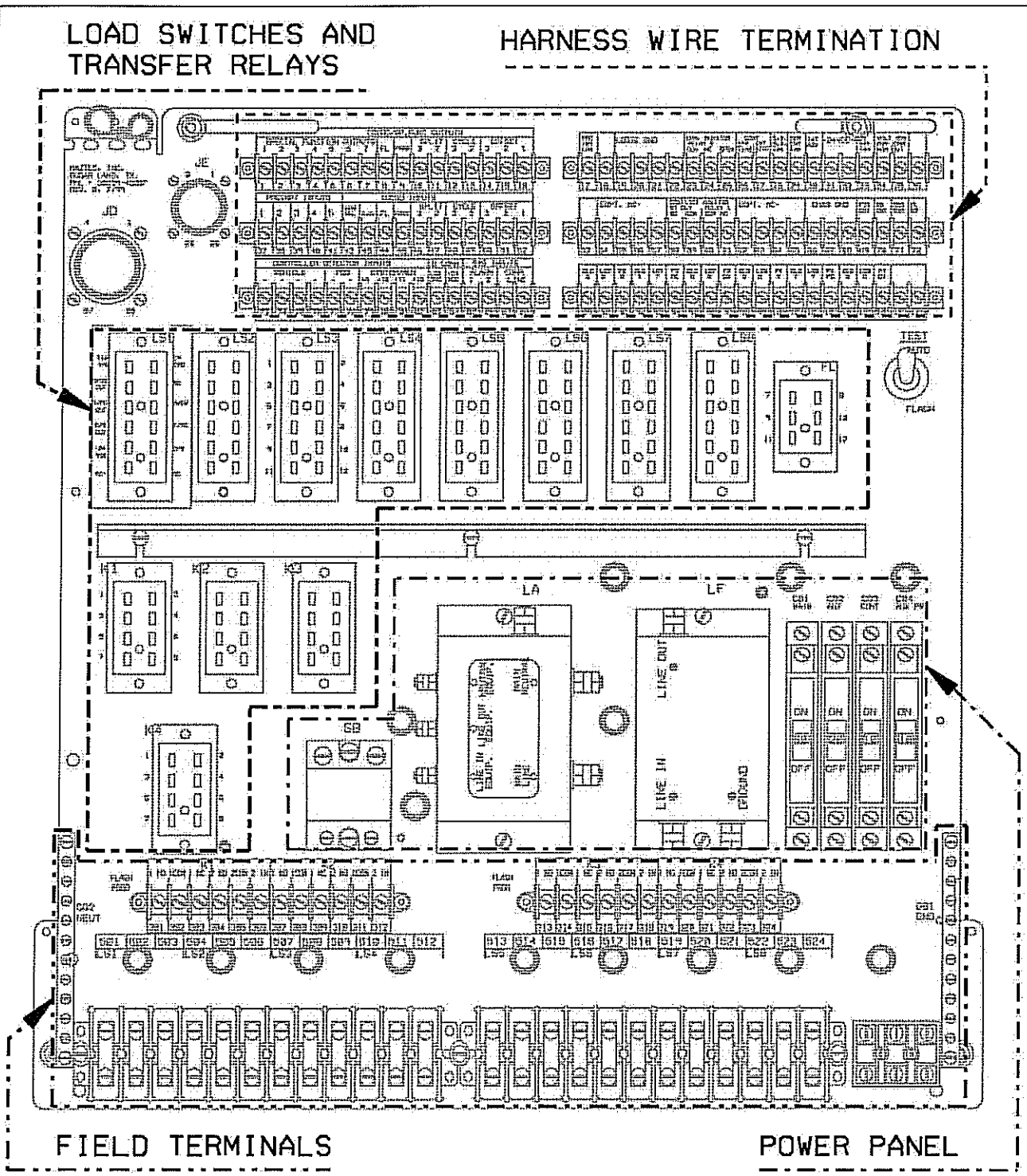

LOUISIANA DEPARTMENT OF TRANSPORTATION AND DEVELOPMENT
TRAFFIC CONTROL STANDARD NO. 18-A
CABINET BACK PANEL MOUNTING SCHEME
REVISION DATE: 01/12/2008 FIGURE NO. 18A-3

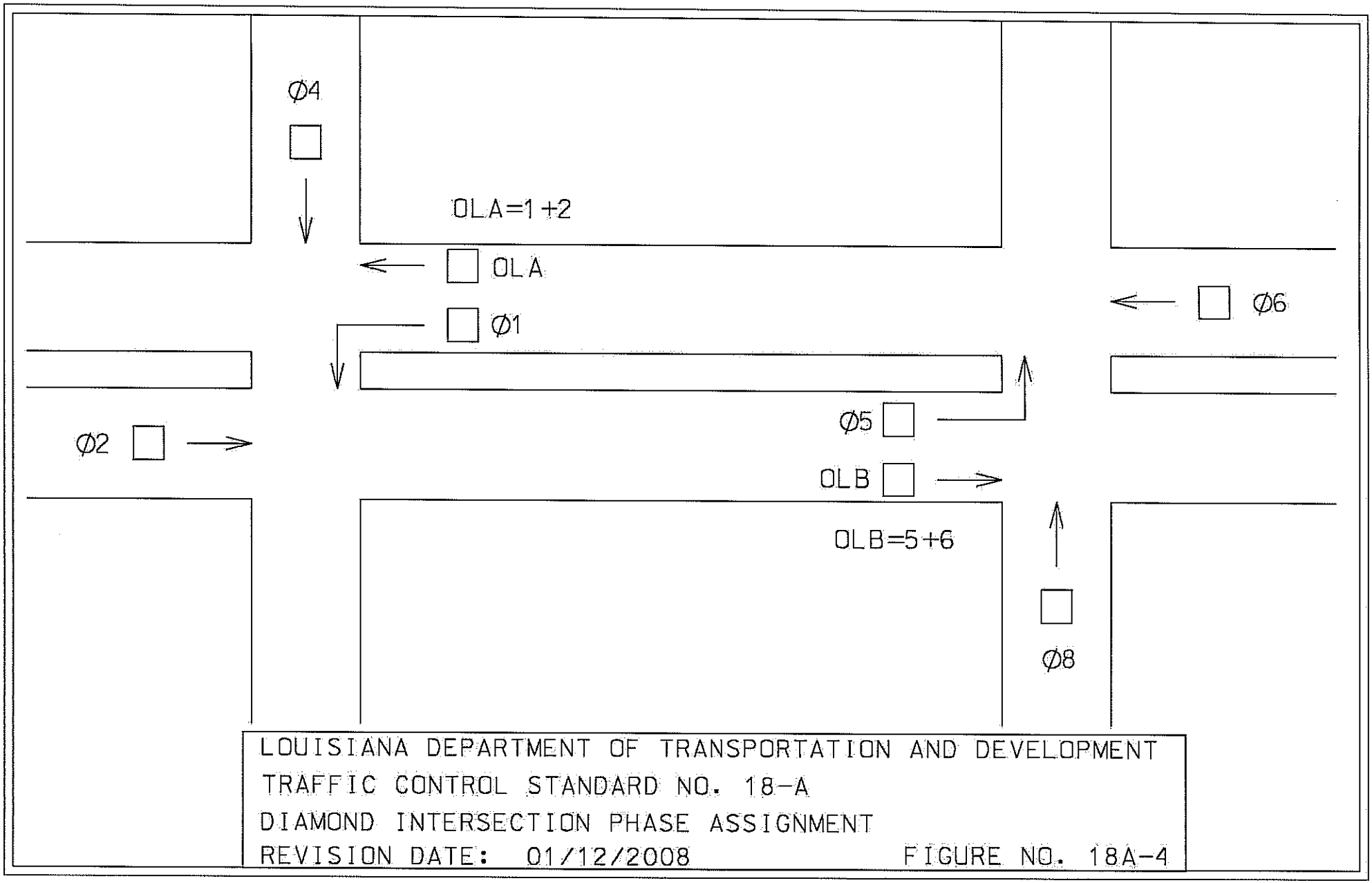
Ø4
OLA=1+2
OLA
Ø1
Ø6
Ø2
Ø5
OLB
OLB=5+6
Ø8
LOUISIANA DEPARTMENT OF TRANSPORTATION AND DEVELOPMENT
TRAFFIC CONTROL STANDARD NO. 18-A
DIAMOND INTERSECTION PHASE ASSIGNMENT
REVISION DATE: 01/12/2008
FIGURE NO. 18A-4

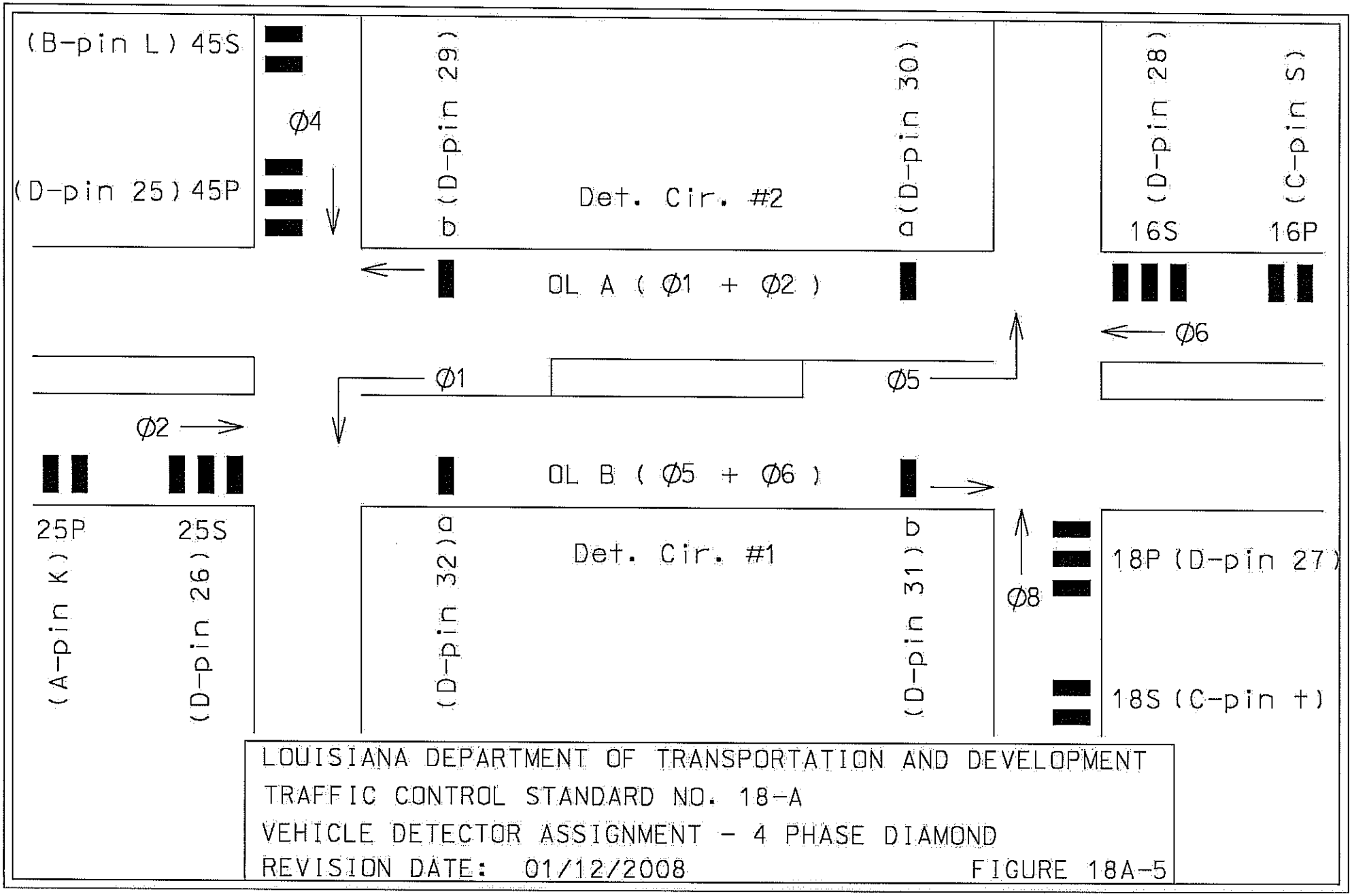
(B-pin L) 45S
(D-pin 25) 45P
Ø4
b (D-pin 29)
Det. Cir. #2
a (D-pin 30)
(D-pin 28) 16S
(C-pin S) 16P
OL A (Ø1 + Ø2)
Ø6
Ø1
Ø5
Ø2
OL B (Ø5 + Ø6)
25P (A-pin K)
25S (D-pin 26)
(D-pin 32) a
Det. Cir. #1
(D-pin 31) b
Ø8
18P (D-pin 27)
18S (C-pin +)
LOUISIANA DEPARTMENT OF TRANSPORTATION AND DEVELOPMENT
TRAFFIC CONTROL STANDARD NO. 18-A
VEHICLE DETECTOR ASSIGNMENT - 4 PHASE DIAMOND
REVISION DATE: 01/12/2008
FIGURE 18A-5

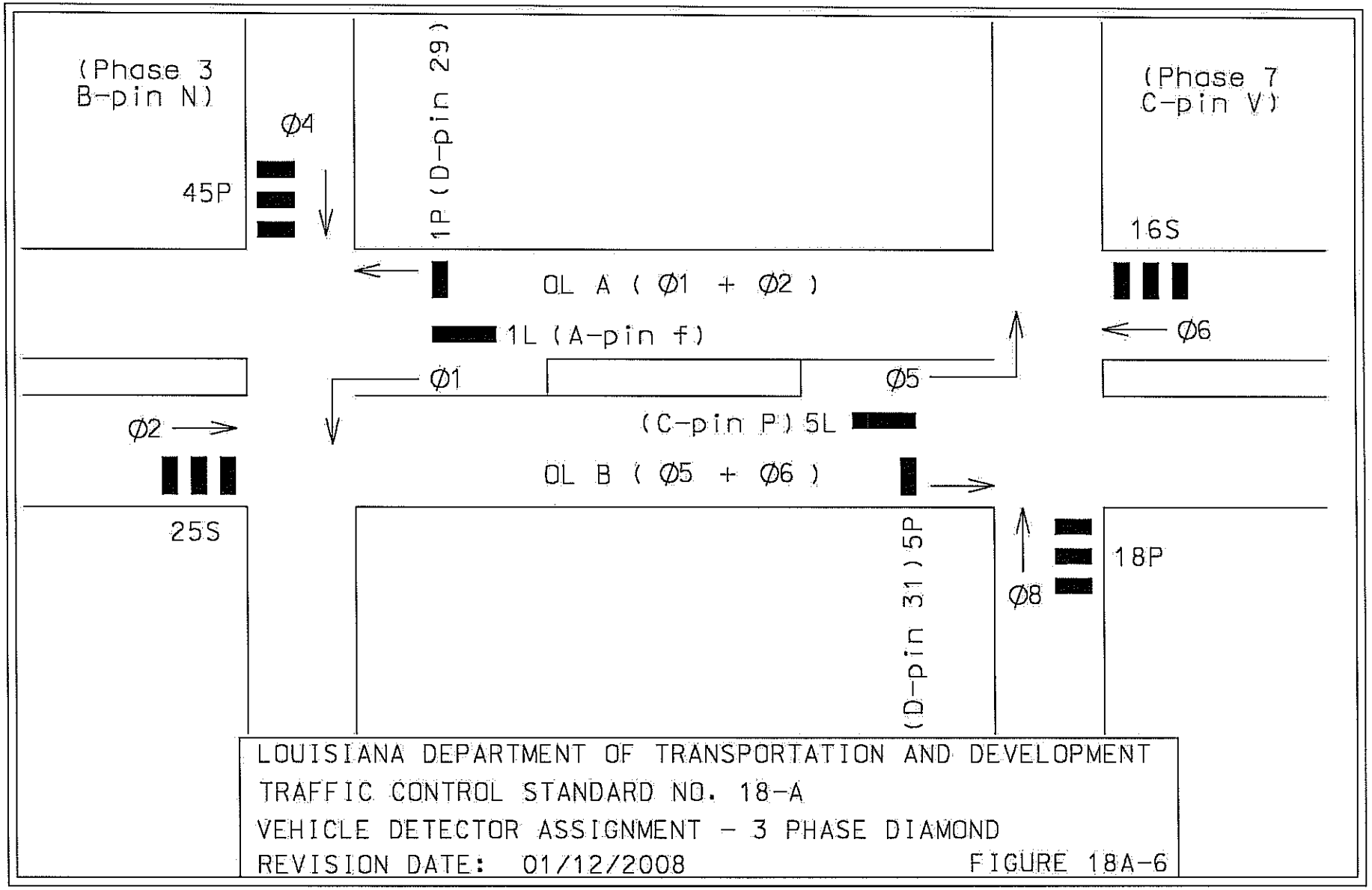
(Phase 3
B-pin N)
Ø4
45P
1P (D-pin 29)
(Phase 7
C-pin V)
16S
OL A (Ø1 + Ø2)
1L (A-pin f)
Ø6
Ø1
Ø5
Ø2
(C-pin P) 5L
OL B (Ø5 + Ø6)
25S
(D-pin 31) 5P
Ø8
18P
LOUISIANA DEPARTMENT OF TRANSPORTATION AND DEVELOPMENT
TRAFFIC CONTROL STANDARD NO. 18-A
VEHICLE DETECTOR ASSIGNMENT - 3 PHASE DIAMOND
REVISION DATE: 01/12/2008
FIGURE 18A-6

STATE OF LOUISIANA
DEPARTMENT OF TRANSPORTATION AND DEVELOPMENT

CONSTRUCTION PROPOSAL INFORMATION FOR

FEDERAL AID PROJECT

STATE PROJECT NOS. 007-02-0097, 007-03-0053 and 007-04-0048
US 61 SIGNAL UPGRADES
ROUTE US 61
ST. JOHN THE BAPTIST, ST. CHARLES and JEFFERSON PARISHES

BID BOND

A Bid Bond is required when the bidder's total bid amount as calculated by the Department in accordance with Subsection 103.01 is greater than $50,000. *(See Section 102 of the Project Specifications.)*

_____, as Principal
(Bidder) and
_____, as Surety,
are bound unto the State of Louisiana, Department of Transportation and Development, (hereinafter called the Department) in the sum of five percent (5%) of the bidder's total bid amount as calculated by the Department for payment, of which the Principal and Surety bind themselves, their heirs, executors, administrators, successors and assigns, as solidary obligors.

Signed and sealed this _____ day of _____, 20_____.

The condition of this obligation is such that, whereas the Principal has submitted a bid to the Department on a contract for the construction of **STATE PROJECT NOS. 007-02-0097, 007-03-0053 and 007-04-0048, FEDERAL AID PROJECT NO. 2606(513), US 61 SIGNAL UPGRADES, located in ST. JOHN THE BAPTIST, ST. CHARLES and JEFFERSON PARISHES, ROUTE US 61,** if the bid is accepted and the Principal, within the specified time, enters into the contract in writing and gives bond with Surety acceptable to the Department for payment and performance of said contract, this obligation shall be void; otherwise to remain in effect.

_____	_____
Principal (Bidder or First Partner to Joint Venture)	If a Joint Venture, Second Partner
By _____	By _____
Authorized Officer-Owner-Partner	Authorized Officer-Owner-Partner
_____	_____
Typed or Printed Name	Typed or Printed Name

_____
Surety

By _____ (Seal)
Agent or Attorney-in-Fact

_____
Typed or Printed Name

To receive a copy of the contract and subsequent correspondence / communication from LA DOTD, with respect to the bid bonds, the following information must be provided:

_____	_____
Bonding Agency or Company Name	Address
_____	_____
Agent or Representative	Phone Number / Fax Number

07/07
Form CS-2A

LOUISIANA DEPARTMENT OF TRANSPORTATION AND DEVELOPMENT
SCHEDULE OF ITEMS

LEAD PROJECT: 007-02-0097
OTHER PROJECTS: 007-02-0097, 007-03-0053, 007-04-0048

DATE: 05/14/09 07:28 PAGE: 1

ITEM NUMBER	APPROXIMATE QUANTITY	UNIT OF MEASURE	PAY ITEM UNIT PRICE (IN WORDS, INK OR TYPED)
202-02-I	LUMP	LUMP SUM	REMOVAL OF SIGNAL EQUIPMENT/RELATED ITEMS _____ DOLLARS _____ CENTS
713-01	LUMP	LUMP SUM	TEMPORARY SIGNS & BARRICADES _____ DOLLARS _____ CENTS
727-01	LUMP	LUMP SUM	MOBILIZATION _____ DOLLARS _____ CENTS
729-01-A	27.3	SQUARE FOOT	SIGN (TYPE A)(R1-2)(36"X36"X36") _____ DOLLARS _____ CENTS
729-01-B	8.0	SQUARE FOOT	SIGN (TYPE A)(R3-2)(24"X24") _____ DOLLARS _____ CENTS
729-01-C	8.0	SQUARE FOOT	SIGN (TYPE A)(R3-4)(24"X24") _____ DOLLARS _____ CENTS

ITEM NUMBER	APPROXIMATE QUANTITY	UNIT OF MEASURE	PAY ITEM UNIT PRICE (IN WORDS, INK OR TYPED)
729-01-D	67.5	SQUARE FOOT	SIGN (TYPE A)(R3-5L)(30"X36") _____ DOLLARS _____ CENTS
729-01-E	30.0	SQUARE FOOT	SIGN (TYPE A)(R3-5R)(30"X36") _____ DOLLARS _____ CENTS
729-01-F	22.5	SQUARE FOOT	SIGN (TYPE A)(R3-6L)(30"X36") _____ DOLLARS _____ CENTS
729-01-G	22.5	SQUARE FOOT	SIGN (TYPE A)(R3-6R)(30"X36") _____ DOLLARS _____ CENTS
729-01-H	15.0	SQUARE FOOT	SIGN (TYPE A)(R3-6A)(30"X36") _____ DOLLARS _____ CENTS
729-01-I	6.3	SQUARE FOOT	SIGN (TYPE A)(R3-8)(30"X36") _____ DOLLARS _____ CENTS

ITEM NUMBER	APPROXIMATE QUANTITY	UNIT OF MEASURE	PAY ITEM UNIT PRICE (IN WORDS, INK OR TYPED)
729-01-J	120.0	SQUARE FOOT	SIGN (TYPE A)(R10-10L)(24"X30") _____DOLLARS _____ CENTS
729-01-K	15.0	SQUARE FOOT	SIGN (TYPE A)(R10-10R)(24"X30") _____DOLLARS _____ CENTS
729-01-L	125.0	SQUARE FOOT	SIGN (TYPE A)(R10-12)(24"X30") _____DOLLARS _____ CENTS
729-01-M	32.0	SQUARE FOOT	SIGN (TYPE A)(W1-6)(48"X24") _____DOLLARS _____ CENTS
729-01-N	48.0	SQUARE FOOT	SIGN (TYPE A)(OM-3R)(12"X36") _____DOLLARS _____ CENTS
729-01-O	15.0	SQUARE FOOT	SIGN (TYPE A)(R10-16)(30"X36") _____DOLLARS _____ CENTS

ITEM NUMBER	APPROXIMATE QUANTITY	UNIT OF MEASURE	PAY ITEM UNIT PRICE (IN WORDS, INK OR TYPED)
729-21-A	31	EACH	U-CHANNEL POST (12 FT.) _____ DOLLARS _____ CENTS
729-21-B	106	EACH	U-CHANNEL POST (5 FT.) _____ DOLLARS _____ CENTS
731-02	5,750	EACH	REFLECTORIZED RAISED PAVEMENT MARKERS _____ DOLLARS _____ CENTS
732-01-C	10,905	LINEAR FOOT	PLASTIC PAVEMENT STRIPING (8" WIDTH) _____ DOLLARS _____ CENTS
732-01-E	4,130	LINEAR FOOT	PLASTIC PAVEMENT STRIPING (24" WIDTH) _____ DOLLARS _____ CENTS
732-02-A	11.440	MILE	PLASTIC PAVEMENT STRIPING (SOLID LINE)(4" WIDTH) _____ DOLLARS _____ CENTS

ITEM NUMBER	APPROXIMATE QUANTITY	UNIT OF MEASURE	PAY ITEM UNIT PRICE (IN WORDS, INK OR TYPED)
732-03-A	3.890	MILE	PLASTIC PAVEMENT STRIPING (BROKEN LINE)(4" WIDTH) _____ DOLLARS _____ CENTS
732-04-A	171	EACH	PLASTIC PAVEMENT LEGENDS & SYMBOLS (ARROW) _____ DOLLARS _____ CENTS
732-04-B	21	EACH	PLASTIC PAVEMENT LEGENDS & SYMBOLS (DOUBLE ARROW) _____ DOLLARS _____ CENTS
732-04-C	109	EACH	PLASTIC PAVEMENT LEGENDS & SYMBOLS (ONLY) _____ DOLLARS _____ CENTS
732-05	5.600	MILE	REMOVAL OF EXISTING MARKINGS _____ DOLLARS _____ CENTS
736-01	6,940	LINEAR FOOT	TRENCHING AND BACKFILLING _____ DOLLARS _____ CENTS

ITEM NUMBER	APPROXIMATE QUANTITY	UNIT OF MEASURE	PAY ITEM UNIT PRICE (IN WORDS, INK OR TYPED)
736-03-A	12,210	LINEAR FOOT	JACKED OR BORED CONDUIT (1" P.E.C. SCHEDULE 80) _____ DOLLARS _____ CENTS
736-03-B	96,000	LINEAR FOOT	JACKED OR BORED CONDUIT (1-1/4" H.D.P.E.) _____ DOLLARS _____ CENTS
736-03-C	6,105	LINEAR FOOT	JACKED OR BORED CONDUIT (3" P.E.C. SCH 80) _____ DOLLARS _____ CENTS
736-04-B	3	EACH	SIGNAL SUPPORT (MAST ARM STANDARD WITH 25' ARM) _____ DOLLARS _____ CENTS
736-04-C	4	EACH	SIGNAL SUPPORT (MAST ARM STANDARD WITH 30' ARM) _____ DOLLARS _____ CENTS
736-04-D	6	EACH	SIGNAL SUPPORT (MAST ARM STANDARD WITH 35' ARM) _____ DOLLARS _____ CENTS

ITEM NUMBER	APPROXIMATE QUANTITY	UNIT OF MEASURE	PAY ITEM UNIT PRICE (IN WORDS, INK OR TYPED)
736-04-E	10	EACH	SIGNAL SUPPORT (MAST ARM STANDARD WITH 40' ARM) _____ DOLLARS _____ CENTS
736-04-F	3	EACH	SIGNAL SUPPORT (MAST ARM STANDARD WITH 45' ARM) _____ DOLLARS _____ CENTS
736-04-G	12	EACH	SIGNAL SUPPORT (MAST ARM STANDARD WITH 50' ARM) _____ DOLLARS _____ CENTS
736-04-H	22	EACH	SIGNAL SUPPORT (MAST ARM STANDARD WITH 55' ARM) _____ DOLLARS _____ CENTS
736-04-I	3	EACH	SIGNAL SUPPORT (DUAL MAST ARM STANDARD WITH 30' + 50' ARMS) _____ DOLLARS _____ CENTS
736-04-J	1	EACH	SIGNAL SUPPORT (DUAL MAST ARM STANDARD WITH 30' + 55' ARMS) _____ DOLLARS _____ CENTS

ITEM NUMBER	APPROXIMATE QUANTITY	UNIT OF MEASURE	PAY ITEM UNIT PRICE (IN WORDS, INK OR TYPED)
736-04-K	1	EACH	SIGNAL SUPPORT (DUAL MAST ARM STANDARD WITH 35' + 50' ARMS) _____ DOLLARS _____ CENTS
736-04-L	2	EACH	SIGNAL SUPPORT (DUAL MAST ARM STANDARD WITH 35' + 55' ARMS) _____ DOLLARS _____ CENTS
736-04-M	1	EACH	SIGNAL SUPPORT (DUAL MAST ARM STANDARD WITH 40' + 45' ARMS) _____ DOLLARS _____ CENTS
736-04-N	1	EACH	SIGNAL SUPPORT (DUAL MAST ARM STANDARD WITH 40' + 50' ARMS) _____ DOLLARS _____ CENTS
736-04-O	2	EACH	SIGNAL SUPPORT (DUAL MAST ARM STANDARD WITH 45' + 50' ARMS) _____ DOLLARS _____ CENTS
736-04-P	2	EACH	SIGNAL SUPPORT (DUAL MAST ARM STANDARD WITH 45' + 55' ARMS) _____ DOLLARS _____ CENTS

ITEM NUMBER	APPROXIMATE QUANTITY	UNIT OF MEASURE	PAY ITEM UNIT PRICE (IN WORDS, INK OR TYPED)
736-04-Q	1	EACH	SIGNAL SUPPORT (DUAL MAST ARM STANDARD WITH 50' + 50' ARMS) _____ DOLLARS _____ CENTS
736-04-R	4	EACH	SIGNAL SUPPORT (DUAL MAST ARM STANDARD WITH 50' + 55' ARMS) _____ DOLLARS _____ CENTS
736-04-S	1	EACH	SIGNAL SUPPORT (DUAL MAST ARM STANDARD WITH 55' + 55' ARMS) _____ DOLLARS _____ CENTS
736-04-T	4	EACH	SIGNAL SUPPORT (STRAIN POLE, 30') _____ DOLLARS _____ CENTS
736-05-B	2	EACH	SIGNAL HEADS (1-SECTION, R, 12" L.E.D. LENS) _____ DOLLARS _____ CENTS
736-05-C	10	EACH	SIGNAL HEADS (1-SECTION, Y, 12" L.E.D. LENS) _____ DOLLARS _____ CENTS

ITEM NUMBER	APPROXIMATE QUANTITY	UNIT OF MEASURE	PAY ITEM UNIT PRICE (IN WORDS, INK OR TYPED)
736-05-D	76	EACH	SIGNAL HEADS (3-SECTION, R,Y,G, 12" L.E.D. LENS) _____ DOLLARS _____ CENTS
736-05-E	14	EACH	SIGNAL HEADS (3-SECTION, R,LT.Y,LT.G, 12" L.E.D. LENS) _____ DOLLARS _____ CENTS
736-05-F	1	EACH	SIGNAL HEADS (3-SECTION, R,RT.Y,RT.G, 12" L.E.D. LENS) _____ DOLLARS _____ CENTS
736-05-G	7	EACH	SIGNAL HEADS (4-SECTION, R,Y,G,LT.G, 12" L.E.D. LENS) _____ DOLLARS _____ CENTS
736-05-H	4	EACH	SIGNAL HEADS (5-SECTION, R,Y,G,LT.Y,LT.G, 12" L.E.D. LENS) _____ DOLLARS _____ CENTS
736-05-I	8	EACH	SIGNAL HEADS (3-SECTION, R,Y,G, 12" L.E.D. LENS)(TUNNEL VISORS) _____ DOLLARS _____ CENTS

ITEM NUMBER	APPROXIMATE QUANTITY	UNIT OF MEASURE	PAY ITEM UNIT PRICE (IN WORDS, INK OR TYPED)
736-05-J	2	EACH	SIGNAL HEADS (3-SECTION, R,LT.Y,LT.G, 12" L.E.D. LENS)(TUNNEL VISORS) _____ DOLLARS _____ CENTS
736-05-K	75	EACH	SIGNAL HEADS (3-SECTION, R,Y,G, 12" L.E.D. LENS)(BACKPLATE) _____ DOLLARS _____ CENTS
736-05-L	11	EACH	SIGNAL HEADS (3-SECTION, R,LT.Y,LT.G, 12" L.E.D. LENS)(BACKPLATE) _____ DOLLARS _____ CENTS
736-05-M	7	EACH	SIGNAL HEADS (4-SECTION, R,Y,G,LT.G, 12" L.E.D. LENS)(BACKPLATE) _____ DOLLARS _____ CENTS
736-05-N	1	EACH	SIGNAL HEADS (4-SECTION, R,Y,G,RT.G, 12" L.E.D. LENS)(BACKPLATE) _____ DOLLARS _____ CENTS
736-05-O	18	EACH	SIGNAL HEADS (5-SECTION, R,Y,G,LT.Y,LT.G, 12" L.E.D. LENS)(BACKPLATE) _____ DOLLARS _____ CENTS

ITEM NUMBER	APPROXIMATE QUANTITY	UNIT OF MEASURE	PAY ITEM UNIT PRICE (IN WORDS, INK OR TYPED)
736-05-P	6	EACH	SIGNAL HEADS (5-SECTION, R,Y,G,RT.Y,RT.G, 12" L.E.D. LENS)(BACKPLATE) _____DOLLARS _____CENTS
736-05-Q	14	EACH	SIGNAL HEADS (3-SECTION, R,Y,G, 12" L.E.D. LENS)(BACKPLATE & TUNNEL VISORS _____DOLLARS _____CENTS
736-05-R	1	EACH	SIGNAL HEADS (3-SECTION, R,LT.Y,LT.G, 12" L.E.D. LENS)(BACKPLATE & TUNNEL ISORS) _____DOLLARS _____CENTS
736-05-S	3	EACH	SIGNAL HEADS (4-SECTION, R,Y,G,LT.G, 12" L.E.D. LENS)(BACKPLATE & TUNNEL V SORS) _____DOLLARS _____CENTS
736-05-T	3	EACH	SIGNAL HEADS (5-SECTION, R,Y,G,LT.Y,LT.G, 12" L.E.D. LENS)(BACKPLATE & TUN EL VISORS) _____DOLLARS _____CENTS
736-06-A	29	EACH	SIGNAL SERVICE (POLE MOUNTED FOR CONTROLLER) _____DOLLARS _____CENTS

ITEM NUMBER	APPROXIMATE QUANTITY	UNIT OF MEASURE	PAY ITEM UNIT PRICE (IN WORDS, INK OR TYPED)
736-06-B	16	EACH	SIGNAL SERVICE (MODIFIED PEDESTAL MOUNTED FOR CONTROLLER) _____ DOLLARS _____ CENTS
736-08-A	27	EACH	SIGNAL CONTROLLER (NEMA TS-2, TYPE 2 CONTROLLER W/ETHERNET PORT, TS-1 CABI ET ON NEW BASE AND RELATED ITEMS) _____ DOLLARS _____ CENTS
736-08-B	1	EACH	SIGNAL CONTROLLER (NEMA TS-2, TYPE 2 CONTROLLER W/ETHERNET PORT, IN EXISTI G CABINET) _____ DOLLARS _____ CENTS
736-09	4,940	LINEAR FOOT	LOOP DETECTOR (SAWCUT, LOOP WIRE, SEALANT) _____ DOLLARS _____ CENTS
736-10-A	24	EACH	UNDERGROUND JUNCTION BOX (TYPE "E") _____ DOLLARS _____ CENTS
736-10-B	102	EACH	UNDERGROUND JUNCTION BOX (TYPE "F") _____ DOLLARS _____ CENTS

ITEM NUMBER	APPROXIMATE QUANTITY	UNIT OF MEASURE	PAY ITEM UNIT PRICE (IN WORDS, INK OR TYPED)
736-10-C	26	EACH	UNDERGROUND JUNCTION BOX (TYPE "H") _____ DOLLARS _____ CENTS
736-10-D	77	EACH	UNDERGROUND JUNCTION BOX (TYPE "I") _____ DOLLARS _____ CENTS
736-10-E	29	EACH	UNDERGROUND JUNCTION BOX (TYPE "J") _____ DOLLARS _____ CENTS
736-11-A	380	LINEAR FOOT	CONDUIT (1/2" P.E.C. SCHEDULE 80) _____ DOLLARS _____ CENTS
736-11-B	3,985	LINEAR FOOT	CONDUIT (1" P.E.C. SCHEDULE 80) _____ DOLLARS _____ CENTS
736-11-C	1,450	LINEAR FOOT	CONDUIT (2" P.E.C. SCHEDULE 80) _____ DOLLARS _____ CENTS

ITEM NUMBER	APPROXIMATE QUANTITY	UNIT OF MEASURE	PAY ITEM UNIT PRICE (IN WORDS, INK OR TYPED)
736-11-D	1,165	LINEAR FOOT	CONDUIT (3" P.E.C. SCHEDULE 80) _____ DOLLARS _____ CENTS
736-11-E	280	LINEAR FOOT	CONDUIT (1-1/4" H.D.P.E.) _____ DOLLARS _____ CENTS
736-12-A	20,954	LINEAR FOOT	CONDUCTOR (2C LOOP LEAD-IN/#16 AWG) _____ DOLLARS _____ CENTS
736-12-B	1,145	LINEAR FOOT	CONDUCTOR (3C POWER) _____ DOLLARS _____ CENTS
736-12-H	1,481	LINEAR FOOT	CONDUCTOR (6C SIGNAL/#14 AWG) _____ DOLLARS _____ CENTS
736-12-I	19,954	LINEAR FOOT	CONDUCTOR (10C SIGNAL/#14 AWG) _____ DOLLARS _____ CENTS

ITEM NUMBER	APPROXIMATE QUANTITY	UNIT OF MEASURE	PAY ITEM UNIT PRICE (IN WORDS, INK OR TYPED)
736-12-J	200	LINEAR FOOT	CONDUCTOR (4C, TELEPHONE) _____ DOLLARS _____ CENTS
S-001	100,000	LNFT	CONDUCTOR, FIBER OPTIC SIGNAL INTERCONNECT TRUNK LINE CABLE (72 SM) _____ DOLLARS _____ CENTS
S-002	525	LNFT	FIBER OPTIC DROP CABLE , 12 FIBER, (SINGLE MODE) _____ DOLLARS _____ CENTS
S-003	106	EACH	"BURIED TRAFFIC FIBER OPTICS CABLE" SIGN (4"X12") _____ DOLLARS _____ CENTS
S-004	28	EACH	SPLICE ENCLOSURE _____ DOLLARS _____ CENTS
S-005	28	EACH	PRETERMINATED PATCH PANEL _____ DOLLARS _____ CENTS

ITEM NUMBER	APPROXIMATE QUANTITY	UNIT OF MEASURE	PAY ITEM UNIT PRICE (IN WORDS, INK OR TYPED)
S-006	56	EACH	PATCH CORDS _____ DOLLARS _____ CENTS
S-007	28	EACH	ETHERNET SWITCH, CAT5 CABLE _____ DOLLARS _____ CENTS
S-008	91	EACH	VIDEO DETECTION DEVICE AND CONNECTION _____ DOLLARS _____ CENTS
S-009	27	EACH	VIDEO DETECTION SYSTEM _____ DOLLARS _____ CENTS
S-010	1	EACH	FLASHING SIGNAL AHEAD SIGN _____ DOLLARS _____ CENTS
S-011	3	EACH	SIGNAL CONTROLLER (FLASHER ASSEMBLY) _____ DOLLARS _____ CENTS

ITEM NUMBER	APPROXIMATE QUANTITY	UNIT OF MEASURE	PAY ITEM UNIT PRICE (IN WORDS, INK OR TYPED)
S-012	LUMP	LUMP SUM	T1 TELEPHONE SERVICE AND RELATED ITEMS _____ DOLLARS _____ CENTS
S-013	LUMP	LUMP SUM	MODIFICATIONS TO EXISTING TRAFFIC SIGNAL CONTROL SOFTWARE _____ DOLLARS _____ CENTS

CONSTRUCTION PROPOSAL SIGNATURE AND EXECUTION FORM

THIS FORM, THE SCHEDULE OF ITEMS, AND THE PROPOSAL GUARANTY MUST BE COMPLETED AS INDICATED AND SUBMITTED TO THE LOUISIANA DEPARTMENT OF TRANSPORTATION AND DEVELOPMENT (DOTD) TO CONSTITUTE A VALID BID

STATE PROJECT NOS. **007-02-0097, 007-03-0053 and 007-04-0048**

FEDERAL AID PROJECT NO. **2606(513)**

NAME OF PROJECT **US 61 SIGNAL UPGRADES**

I (WE) HEREBY CERTIFY THAT I (WE) HAVE CAREFULLY EXAMINED THE PROPOSAL, PLANS AND SPECIFICATIONS, INCLUDING ANY AND ALL ADDENDA, AND THE SITE OF THE ABOVE PROJECT AND AM (ARE) FULLY COGNIZANT OF ALL PROPOSAL DOCUMENTS, THE MASTER COPY OF WHICH IS ON FILE AT DOTD HEADQUARTERS IN BATON ROUGE, LA., AND ALL WORK, MATERIALS AND LABOR REQUIRED THEREIN, AND AGREE TO PERFORM ALL WORK, AND SUPPLY ALL NECESSARY MATERIALS AND LABOR REQUIRED FOR SUCCESSFUL AND TIMELY COMPLETION OF THE ABOVE PROJECT AND TO ACCEPT THE SUMMATION OF THE PRODUCTS OF THE UNIT PRICES BID ON THE SCHEDULE OF ITEMS ATTACHED HERETO AND MADE A PART HEREOF MULTIPLIED BY THE ACTUAL QUANTITY OF UNIT OF MEASURE PERFORMED FOR EACH ITEM, AS AUDITED BY DOTD, AS FULL AND FINAL PAYMENT FOR ALL WORK, LABOR AND MATERIALS NECESSARY TO COMPLETE THE ABOVE PROJECT, SUBJECT TO INCREASE ONLY FOR PLAN CHANGES (CHANGE ORDERS) APPROVED BY THE DOTD CHIEF ENGINEER OR HIS DESIGNEE. THIS BID IS SUBMITTED IN ACCORDANCE WITH THE GENERAL BIDDING REQUIREMENTS IN THE CONSTRUCTION PROPOSAL AND ALL SPECIAL PROVISIONS, PLANS, SUPPLEMENTAL SPECIFICATIONS, AND THE LOUISIANA STANDARD SPECIFICATIONS FOR ROADS AND BRIDGES (2006 EDITION). I (WE) UNDERSTAND THAT THE SUMMATION OF THE PRODUCTS OF THE UNIT PRICES BID ON THE SCHEDULE OF ITEMS MULTIPLIED BY THE ESTIMATED QUANTITY OF UNIT OF MEASURE FOR EACH ITEM, ALONG WITH ANY OTHER FACTORS SPECIFIED TO BE APPLICABLE SUCH AS CONSTRUCTION TIME AND/OR LANE RENTAL, SHALL BE THE BASIS FOR THE COMPARISON OF BIDS. I (WE) UNDERSTAND THAT THE SCHEDULE OF ITEMS MUST CONTAIN UNIT PRICES WRITTEN OUT IN WORDS AND THAT THE SCHEDULE OF ITEMS SUBMITTED AS PART OF THIS BID IS ON THE FORM SUPPLIED BY DOTD IN THE BID PROPOSAL. MY (OUR) PROPOSAL GUARANTY IN THE AMOUNT SPECIFIED FOR THE PROJECT IS ATTACHED HERETO AS EVIDENCE OF MY (OUR) GOOD FAITH TO BE FORFEITED IF THIS BID IS ACCEPTED BY DOTD AND I (WE) FAIL TO COMPLY WITH ANY REQUIREMENT NECESSARY FOR AWARD AND EXECUTION OF THE CONTRACT, AS WELL AS, SIGN AND DELIVER THE CONTRACT AND PAYMENT/PERFORMANCE/RETAINAGE BOND AS REQUIRED IN THE SPECIFICATIONS.

NONCOLLUSION DECLARATION (APPLICABLE TO FEDERAL-AID PROJECTS)

I (WE) DECLARE UNDER PENALTY OF PERJURY UNDER THE LAWS OF THE UNITED STATES AND THE STATE OF LOUISIANA THAT I (WE) HAVE NOT DIRECTLY OR INDIRECTLY, ENTERED INTO ANY AGREEMENT, PARTICIPATED IN ANY COLLUSION, OR OTHERWISE TAKEN ANY ACTION IN RESTRAINT OF FREE COMPETITIVE BIDDING IN CONNECTION WITH THE CONTRACT FOR THIS PROJECT NOR VIOLATED LA. R.S. 48:254.

BIDDER'S DBE GOAL STATEMENT (APPLICABLE TO DBE GOAL PROJECTS)

IF THIS PROJECT IS DESIGNATED BY SPECIAL PROVISION AS A DISADVANTAGED BUSINESS ENTERPRISE (DBE) GOAL PROJECT IN ACCORDANCE WITH THE DBE PROVISIONS OF THIS CONTRACT, THE BIDDER ASSURES DOTD THAT HE/SHE WILL MEET OR EXCEED THE DBE CONTRACT GOAL, OR IF THE BIDDER CANNOT MEET THE REQUIRED DBE GOAL, THE BIDDER ASSURES DOTD THAT HE/SHE HAS MADE AND CAN DOCUMENT GOOD FAITH EFFORTS MADE TOWARDS MEETING THE GOAL REQUIREMENT IN ACCORDANCE WITH THE CONTRACT AND DBE PROGRAM MANUAL INCORPORATED HEREIN BY REFERENCE.

THE APPARENT LOW BIDDER SHALL COMPLETE AND SUBMIT TO THE DOTD COMPLIANCE PROGRAMS OFFICE, FORM CS-6AAA AND ATTACHMENT(S) AND, IF NECESSARY, DOCUMENTATION OF GOOD FAITH EFFORTS MADE BY THE BIDDER TOWARD MEETING THE GOAL, WITHIN TEN BUSINESS DAYS AFTER THE OPENING OF BIDS FOR THIS PROJECT. RESPONSIVENESS OF INFORMATION SUPPLIED IN THIS SECTION OF THIS CONSTRUCTION PROPOSAL SIGNATURE AND EXECUTION FORM IS GOVERNED BY THE DBE REQUIREMENTS INCLUDED WITHIN THE SPECIFICATIONS AND DBE PROGRAM MANUAL.

CERTIFICATION OF EMPLOYMENT OF LOUISIANA RESIDENTS TRANSPORTATION INFRASTRUCTURE MODEL FOR ECONOMIC DEVELOPMENT (TIME) PROJECTS (APPLICABLE TO TIME PROJECTS)

IF THIS PROJECT IS DESIGNATED BY SPECIAL PROVISION AS A TRANSPORTATION INFRASTRUCTURE MODEL FOR ECONOMIC DEVELOPMENT (TIME) PROJECT AS DEFINED IN ACT NO. 16 OF THE 1989 FIRST EXTRAORDINARY SESSION OF THE LEGISLATURE WHICH ENACTED PART V OF CHAPTER 7 OF SUBTITLE II OF TITLE 47 OF THE LOUISIANA REVISED STATUTES OF 1950, COMPRISED OF R.S. 47:820.1 THROUGH 820.6.

THE BIDDER CERTIFIES THAT AT LEAST 80 PERCENT OF THE EMPLOYEES EMPLOYED ON THIS TIME PROJECT WILL BE LOUISIANA RESIDENTS IN ACCORDANCE WITH LOUISIANA R.S. 47:820.3.

NON PARTICIPATION IN PAYMENT ADJUSTMENT (ASPHALT CEMENT AND FUELS) STATEMENT

IF THIS PROJECT IS DESIGNATED BY SPECIAL PROVISION AS BEING SUBJECT TO PAYMENT ADJUSTMENT FOR ASPHALT CEMENT AND/OR FUELS, THE BIDDER HAS THE OPTION OF REQUESTING EXCLUSION FROM SAID PAYMENT ADJUSTMENT PROVISIONS THAT ARE ESTABLISHED BY SPECIAL PROVISION ELSEWHERE HEREIN.

IF THE BIDDER DESIRES TO BE EXCLUDED FROM THESE PAYMENT ADJUSTMENT PROVISIONS,

THE BIDDER IS REQUIRED TO MARK HERE ☐

FAILURE TO MARK THIS BOX PRIOR TO BID OPENING WILL CONSTITUTE FORFEITURE OF THE BIDDER'S OPTION TO REQUEST EXCLUSION.

CS-14A
08/06

STATE PROJECT NOS. **007-02-0097, 007-03-0053 and 007-04-0048**

BIDDER SIGNATURE REQUIREMENTS (APPLICABLE TO ALL PROJECTS)

THIS BID FOR THE CAPTIONED PROJECT IS SUBMITTED BY:

Name of Principal (Individual, Firm, Corporation, or Joint Venture)

If Joint Venture, Name of First Partner	If Joint Venture, Name of Second Partner
(Louisiana Contractor's License Number of Bidder or First Partner to Joint Venture)	(Louisiana Contractor's License Number of Second Partner to Joint Venture)
(Business Street Address)	(Business Street Address)
(Business Mailing Address, if different)	(Business Mailing Address, if different)
(Area Code and Telephone Number of Business)	(Area Code and Telephone Number of Business)
(Telephone Number and Name of Contact Person)	(Telephone Number and Name of Contact Person)
(Telecopier Number, if any)	(Telecopier Number, if any)

ACTING ON BEHALF OF THE BIDDER, THIS IS TO ATTEST THAT THE UNDERSIGNED DULY AUTHORIZED REPRESENTATIVE OF THE ABOVE CAPTIONED FIRM, CORPORATION OR BUSINESS, BY SUBMISSION OF THIS BID, AGREES AND CERTIFIES THE TRUTH AND ACCURACY OF ALL PROVISIONS OF THIS PROPOSAL, INCLUSIVE OF THE REQUIREMENTS, STATEMENTS, DECLARATIONS AND CERTIFICATIONS ABOVE AND IN THE SCHEDULE OF ITEMS AND PROPOSAL GUARANTY. EXECUTION AND SIGNATURE OF THIS FORM AND SUBMISSION OF THE SCHEDULE OF ITEMS AND PROPOSAL GUARANTY SHALL CONSTITUTE AN IRREVOCABLE AND LEGALLY BINDING OFFER BY THE BIDDER.

(Signature)	(Signature)
(Printed Name)	(Printed Name)
(Title)	(Title)
(Date of Signature)	(Date of Signature)

CONTRACTOR'S TOTAL BASE BID $ _____

IT IS AGREED THAT THIS TOTAL, DETERMINED BY THE BIDDER, IS FOR PURPOSES OF OPENING AND READING BIDS ONLY, AND THAT THE LOW BID FOR THIS PROJECT WILL BE DETERMINED FROM THE EXTENSION AND TOTAL OF THE BID ITEMS BY DOTD.

CS-14AA
08/06