STATE OF LOUISIANA
DEPARTMENT OF TRANSPORTATION AND DEVELOPMENT

LETTER BID PROPOSAL

FEDERAL AID PROJECT ER-ERE3(032)

STATE PROJECT NO. 245-90-0061

EMERGENCY REPAIRS TO BAYOU DULARGE CONTROL HOUSE FROM GUSTAV

TERREBONNE PARISH

STATE OF LOUISIANA
MICHAEL J. STACK
REG. No. 25613
REGISTERED PROFESSIONAL ENGINEER IN CIVIL ENGINEERING

3/6/09

ELECTRONIC COPY -- NOT FOR BID SUBMITTAL

STATE PROJECT NO. 245-90-0061
TABLE OF CONTENTS

	Page No.
Title Sheet	A-1
Table of Contents	B-1
Notice to Contractors	C-1 thru C-2
Special Provisions	D-1 thru D-14
Supplemental Specifications:	
Supplemental Specifications for 2006 Standard Specifications (08/08)	E-1 thru E-30
Other Specifications	E-31 thru E-52
Plans (46 sheets)	F-1 thru F-46
Construction Proposal Information or Returnables:	
Title Sheet	G-1
Bid Bond	H-1
Schedule of Items	I-1 thru I-3
Construction Proposal Signature and Execution Form	J-1 thru J-2

ELECTRONIC COPY -- NOT FOR BID SUBMITTAL

NOTICE TO CONTRACTORS (08/07)

Sealed paper bids for the following project will be received by the Department of Transportation and Development (DOTD). Paper bids can be delivered to the DOTD District 02 Design Office, 7252 Lakeshore Dr, New Orleans, Louisiana 70124 until 10:00 a.m on **Tuesday, March 17, 2009**, at which time all bids will be publicly opened and presented. No bids will be received after 10:00 a.m. Any person requiring special accommodations shall notify DOTD at (504) 816-7309 not less than 3 business days before bid opening.

STATE PROJECT NO. 245-90-0061
DESCRIPTION: EMERGENCY REPAIRS TO BAYOU DULARGE CONTROL HOUSE FROM GUSTAV
ROUTE: LA 315
PARISH: TERREBONNE
TYPE: Repair structural and electrical damages to control house and related work
LIMITS: BAYOU DULARGE BRIDGE
ESTIMATED COST RANGE: $100,000 to $250,000
PROJECT ENGINEER: KEITH ANGELETTE (985)858-2403, 5056 West Main St., Houma LA, 70360-4900
PROJECT MANAGER: JUSTIN GUILBEAU (504)816-7310, 7252 Lakeshore Dr., New Orleans, LA 70124
COST OF PROPOSAL FORMS: FREE
COST OF PLANS: Included in proposal (no additional charge).

Bids must be prepared and submitted in accordance with Section 102 of the 2006 Louisiana Standard Specifications for Roads and Bridges as amended by the project specifications, and must include all information required by the proposal.

ELECTRONIC COPY -- NOT FOR BID SUBMITTAL

NOTICE TO CONTRACTORS (CONTINUED)

Plans and/or proposals may be obtained at the DOTD Headquarters District 02 Design Office, 7252 Lakeshore Dr, in New Orleans, or by contacting the DOTD; Email: justinguilbeau@dotd.la.gov, or Phone (504) 816-7310. Proposals will not be issued later than 24 hours prior to the time set for opening bids. Upon request, a DOTD employee will show the work.

The U. S. Department of Transportation (DOT) operates a toll free "Hotline" Monday through Friday, 8:00 a.m. to 5:00 p.m., eastern time. Anyone with knowledge of possible bid rigging, bidder collusion, or other fraudulent activities should call 1-800-424-9071. All information will be treated confidentially and caller anonymity will be respected.

ELECTRONIC COPY -- NOT FOR BID SUBMITTAL

GENERAL BIDDING REQUIREMENTS (08/06): The specifications, contract and bonds governing the construction of the work are the 2006 Edition of the Louisiana Standard Specifications for Roads and Bridges, together with any supplementary specifications and special provisions attached to this proposal.

Bids shall be prepared and submitted in accordance with Section 102 of the Standard Specifications.

The plans herein referred to are the plans approved and marked with the project number, route and Parish, together with all standard or special designs that may be included in such plans. The bidder declares that the only parties interested in this proposal as principals are those named herein; that this proposal is made without collusion or combination of any kind with any other person, firm, association, or corporation, or any member or officer thereof; that careful examination has been made of the site of the proposed work, the plans, Standard Specifications, supplementary specifications and special provisions above mentioned, and the form of contract and payment, performance, and retainage bond; that the bidder agrees, if this proposal is accepted, to provide all necessary machinery, tools, apparatus and other means of construction and will do all work and furnish all material specified in the contract, in the manner and time therein prescribed and in accordance with the requirements therein set forth; and agrees to accept as full compensation therefore, the amount of the summation of the products of the quantities of work and material incorporated in the completed project, as determined by the engineer, multiplied by the respective unit prices herein bid.

It is understood by the bidder that the quantities given in this proposal are a fair approximation of the amount of work to be done and that the sum of the products of the approximate quantities multiplied by the respective unit prices bid shall constitute gross sum bid, which sum shall be used in comparison of bids and awarding of the contract.

The bidder further agrees to perform all extra and force account work that may be required on the basis provided in the specifications.

The bidder further agrees that within 15 calendar days after the contract has been transmitted to him, he will execute the contract and furnish the Department satisfactory surety bonds.

If this proposal is accepted and the bidder fails to execute the contract and furnish bonds as above provided, the proposal guaranty shall become the property of the Department; otherwise, said proposal guaranty will be returned to the bidder; all in accordance with Subsection 103.04.

BUY AMERICA PROVISIONS (03/95): Pursuant to the "Buy America Provisions" of the Surface Transportation Assistance Act (STAA) of 1982 as promulgated by current FHWA regulation 23 CFR 635.410 and the Intermodal Surface Transportation Efficiency Act of 1991 (ISTEA) amendment to (STAA), all steel and iron materials permanently installed on this project shall be manufactured, including application of a coating, in the United States, unless a waiver of these provisions is granted. Coating includes all processes which protect or enhance the value of the material to which the coating is applied. The request for waiver must be presented in writing to the Department by the contractor. Such waiver may be granted if it is determined that:

(1) The application of Buy America Provisions would be inconsistent with the public interest or

(2) Such materials are not produced in the United States in sufficient and reasonably available quantities and of a satisfactory quality.

ELECTRONIC COPY -- NOT FOR BID SUBMITTAL

Minimal use of foreign steel and iron materials will be allowed without waiver provided the cost of these materials does not exceed 0.1 percent of the total contract cost or $2,500, whichever is greater; however, the contractor shall make written request to the DOTD Construction Engineering Administrator for permission to use such foreign materials and shall furnish a listing of the materials, their monetary value, and their origin and place of production.

The burden of proof for the origin and place of production and any request for waiver is the responsibility of the contractor.

Prior to the use of steel and iron materials in the project, the contractor shall furnish Mill Test Reports to the engineer for such steel and iron materials, accompanied by a notarized certification stating that the Mill Test Reports represent the steel and iron materials to be furnished and that such materials were produced and fabricated in the United States.

Pig iron and processed, pelletized, and reduced iron ore are exempt from the Buy America Provisions.

BID PROTEST PROCEDURE (04/01): Section 102 of the Standard Specifications is amended as follows. Subsection 102.14 is added.

102.14 BID PROTEST PROCEDURE: The Chief Engineer will be the final authority for resolution of bid protests.

MAINTENANCE OF TRAFFIC (08/06): Subsection 104.03 of the 2006 Standard Specifications is amended to include the following requirements.

The contractor shall provide for and maintain through and local traffic at all times and shall conduct his operations in such manner as to cause the least possible interference with traffic at junctions with roads, streets and driveways.

In order to maintain traffic, the contractor shall construct temporary detours as required by the contract.

SUBLETTING OF CONTRACT (02/99): Subsection 108.01 of the Standard Specifications is amended as follows:

The second sentence is deleted and the following substituted.

If such consent is given, the contractor will be permitted to sublet a portion of the work, but shall perform with the contractor's own organization work amounting to at least 30 percent of the total contract amount.

ITEM S-001, CANOPY LIGHTS (D02 01/09): This item consists removing all components of the existing canopy lights and installing a four new canopy lights as shown on plans and specified herein. All cost for installing lights shall be included in this item, which shall include lights and hardware required for proper installation in accordance with plans and manufacture's instructions. All electrical work shall be conducted in a manner to comply with current building codes.

The canopy lights shall be a commercial grade 30˚ cone adjustable spot light in die-formed aluminum weather tight enclosure with a junction box. The fixture shall be complete with a 75-watt incandescent lamp.

ELECTRONIC COPY -- NOT FOR BID SUBMITTAL

Submittals- The contractor shall provide 3 copies of submittals to the Project Engineer for the following items prior to installation.

Item	Brochures Description
Canopy Lights	X

Payment shall be made at the contract unit price, which shall include all materials, tools, equipment, labor and incidentals and the performance of all work necessary to complete the item.

Item S-001, Canopy Lights, per Each.

ITEM S-002, ROOFING SYSTEM (D02 01/09): This item consists removing all the temporary roof materials and remains of permanent roof, and furnishing and installing a new roof system in accordance with plans, specifications, and to current building codes.

The new roofing system shall consist of insulation, 4 ply built-up roofing with aggregate surfacing, roof drain, vent pipe, extruded aluminum coping, aluminum soffit, and aluminum trim closure, as shown on plans and specified herein.

Insulation- This item shall include all materials, equipment, labor and incidentals needed to complete this item as shown on plans. The insulation shall be 3" rigid insulation installed in accordance with plans. The contractor shall submit material specifications to the Project Engineer for approval prior to installing insulation. Insulation shall be installed to the satisfaction of the Project Engineer.

4-Ply Buit-Up Roofing- Shall consist of 4 plies of fiberglass felt in a Type III asphalt flood coat over a nailed base sheet and vapor barrier with a gravel ballast. Roof shall be applied over light weight concrete on standard corruform deck.

Base sheet shall be base felt complying with ASTM D-4601.

Vapor retarder shall be fiberglass felt complying with ASTM D-2178-IV.

Ply felts shall be asphalt coated fiberglass felt complying with ASTM D-2178, Type VI.

Interply and flood coat shall be bitumen asphalt Type III ASTM D-312.

Aggregate shall comply with ASTM D-1863, Gravel 1, nominal 3/8 inch diameter.

Gravel guard shall be 20 gauge (.032 inch) aluminum.

Base flashing and composition stripping shall be reinforced modified bitumen with a ceramic granular surface.

All other materials not specified but required for a complete and proper installation shall be selected by the manufacturer subject to the approval of the project engineer.

Installation shall be in strict accordance with the written instructions of the roofing manufacturer.

Roof Drain- This item shall include all materials, equipment, labor and incidentals needed to complete this item as shown on plans. The roof drain shall include drain, flashing, chalking, piping, and all incidentals to install a functional drain without leakage. The existing piping network located between roof and the control room floor shall be removed and replaced as shown on plans. The pipes shall be replaced to the first joint below the floor elevation. The roof drain shall be installed to the satisfaction of the Project Engineer.

Vent Pipe- This item shall include all materials, equipment, labor and incidentals needed to complete this item as shown on plans. The vent pipe shall include all materials needed to

ELECTRONIC COPY -- NOT FOR BID SUBMITTAL

install a functional vent pipe. The existing piping network located between roof and the control room floor shall be removed and replaced as shown on plans. The pipes shall be replaced to the first joint below the floor elevation. The vent pipe shall be installed to the satisfaction of the Project Engineer.

Extruded Aluminum Coping- This item shall include all materials, equipment, labor and incidentals needed to complete this item as shown on plans. The extruded aluminum coping shall have an anodized clear finish and color. The contractor shall submit material specifications to the Project Engineer for approval prior to installing coping. The extruded aluminum coping shall be installed to the satisfaction of the Project Engineer.

Aluminum Soffit- This item shall include all materials, equipment, labor and incidentals needed to complete this item as shown on plans. The aluminum soffit shall be an 18 gage perforated soffit with baked enamel white finish and color. The contractor shall submit material specifications to the Project Engineer for approval prior to installing Soffit. The aluminum soffit shall be installed to the satisfaction of the Project Engineer.

Aluminum Trim Closure- This item shall include all materials, equipment, labor and incidentals needed to complete this item as shown on plans. The aluminum trim closure shall have a baked enamel white finish and color. The contractor shall submit material specifications to the Project Engineer for approval prior to installing aluminum trim closure. The aluminum trim closure shall be installed to the satisfaction of the Project Engineer.

During construction the contractor shall be responsible for performing all operations in a manner to protect the inside of the control house from weather elements. The contractor shall be responsible for developing and executing a plan to protect the interior of the control house. If any damages occur, the contractor shall be responsible for repairing the damage to its original condition and to the approval of the Project Engineer at no cost to the Department.

Submittals- The contractor shall provide 3 copies of submittals to the Project Engineer for the following items prior to installation.

Item	**Brochures Description**
Insulation	X
4-Ply Built Up Roofing	X
Roof Drain	X
Vent Pipe	X
Extruded Aluminum Coping	X
Aluminum Soffit	X
Aluminum Trim Closure	X

Payment shall be made at the contract unit price, which shall include all materials, tools, equipment, excavation, labor and incidentals and the performance of all work necessary to complete the item.

Item S-002, Roofing System, per Lump Sum.

ITEM S-003, AIR CONDITIONER/ HEATER UNIT (D02 01/09): This item consists removing all components of the existing air conditioner and heater and installing a new air conditioner and heater as shown on plans and specified herein. All cost for installing unit shall

ELECTRONIC COPY -- NOT FOR BID SUBMITTAL

be included in this item. All electrical work shall be conducted in a manner to comply with current building codes. The existing unit shall become property of the Department. The contractor shall take care not to damage the existing unit during removal.

The unit shall be a 230 volt unit with a minimum cooling capacity of 14,100 BTUH and a minimum heater rated at 15,370 BTUH. It shall be a complete unit with all incremental controls and outside louvers for complete operating unit. All form work and materials to properly install the unit shall be included in this item.

Submittals- The contractor shall provide 3 copies of submittals to the Project Engineer for the following items prior to installation.

Item	Brochures Description
Air Conditioner and Heater	X

Payment shall be made at the contract unit price, which shall include all materials, tools, equipment, labor and incidentals and the performance of all work necessary to complete the item.

Item S-003, Air Conditioner/ Heater Unit, per Each.

ITEM S-004, WINDOW SYSTEM (D02 01/09): This item consists removing all components of the existing window systems and installing a new double pane insulated window system and window blinds in accordance with plans, specifications, and to current building codes.

The contractor shall remove all components of the existing window system. It shall be the responsibility of the contractor to properly dispose of all materials removed.

This item shall include all materials and cost included to install the new storefront window system. This includes but is not limited to the window system, needed frame work, clips and fasteners, flashing, caulking, etc. The window system shall be installed in accordance with the manufacturer's instructions and specifications and to the satisfaction of the Project Engineer.

The window system shall be a double pane insulated window system certified by the AAMA as tested in accordance with their Standard 101 and shall meet or exceed performance class HC for aluminum projected windows. All windows shall have a minimum thickness of ¼ inches. The windows shall be factory glazed. The aluminum window frames shall be aluminum frames that are non-staining, and that do not require painting. All framing shall be from the same manufacture and shall be installed as per manufacture's specifications.

Window blinds shall be installed on all windows of the control house. The blinds shall cover the entire width and height of all windows. The blinds shall be made of 1" aluminum slates and equipped with a roll formed steel head and bottom rail. The blinds shall be tilt controlled. The contractor shall be responsible for removing all existing components of the existing window blinds.

Submittals- The contractor shall provide 3 copies of submittals to the Project Engineer for the following items prior to installation.

ELECTRONIC COPY -- NOT FOR BID SUBMITTAL

Item	Brochures Description	Installation Procedures
Windows	X	X
Window Frames	X	X
Blinds	X	

During construction the contractor shall be responsible for performing all operations in a manner to protect the inside of the control house from weather elements. The contractor shall be responsible for developing and executing a plan to protect the interior of the control house. If any damages occur, the contractor shall be responsible for repairing the damage to its original condition and to the approval of the Project Engineer at no cost to the Department.

Payment shall be made at the contract unit price, which shall include all materials, tools, equipment, labor and incidentals and the performance of all work necessary to complete the item.

Item S-004, Window System, per Lump Sum.

ITEM S-005, EXTERIOR DOOR (D02 01/09): This item consists removing all components of the existing exterior door and installing a new exterior door frame, steel door, hardware and screen door in accordance with plans, specifications, and to current building codes.

Steel doors and frames shall be furnished in accordance with the plan details and the following specifications. Installation procedures and fabrication tolerances shall be as recommended by the Steel Door Institute Standards 111A, 117 and the manufacturer's recommendations.

Steel door: Steel door shall be a 3’6” X 7’0” with a 1’9” X 2’0” opening for safety glass panel, hollow metal, insulated, of flush construction extra heavy-duty grade III. Steel shall be stretcher level standard hot dipped galvanized in accordance with ASTM A526 or A642 and A525. All surfaces are to be thoroughly cleaned and chemically prepared for the acceptance of a factory applied prime coat of paint. Factory applied paint shall be a rust inhibiting primer either baked on or air-dried, and suitable as a base for the field applied finish coat. The door shall be painted 1-coat metal primer and 2-coats alkyd gloss enamel. The color shall be light green to match existing color on control house.

Steel door panels shall be 16 gauge with 14 gauge spot welded channel end closures. Steel doors shall be reinforced for application of hardware and closures. Reinforcing shall be 10 gage galvanized steel for hinges, 14 gauge for closures, and 16 gage elsewhere.

Doors shall be prepared to receive mortise and concealed finish hardware, including cutouts, reinforcing, drilling and tapping in accordance with the required hardware and templates provided by hardware suppliers. Drilling and/or tapping for surface applied finish hardware may be done at site.

Where glazing is required, non-removable stops shall be applied on the outside and removable beads on the inside. Glazing shall be minimum 20 gage steel. Surface applied muntins may be used for multiple lite requirements.

Steel doors shall be 1-3/4" thick completely filled with suitable sound deadening and self-extinguishing insulating material.

ELECTRONIC COPY -- NOT FOR BID SUBMITTAL

Steel Door Frames: Steel door frames shall be manufactured of 16 gauge galvanized steel conforming to ASTM Designations A526 and A525. Unit type welded construction shall be used throughout with corners mitered, welded, and ground smooth on the outside. Removable steel spreaders are to be welded to bottom of frame. Anchors of 18 gage galvanized steel shall be provided for installation. There shall be a minimum of 6 wall anchors and 2 floor anchors per frame. Frames for fire doors shall be listed. Painting shall be as specified under "Steel Doors" above. Provide two silencers on drill stops of strike jams.

Hardware: Any item not specifically mentioned but necessary for the completion of work shall be of the most suitable type matching the quality and finish of items that are herein described.

All items of hardware to be fastened to metal or pre-finished doors and/or frames shall be furnished to template. The contractor shall furnish templates and/or samples of approved hardware to the respective door and frame suppliers.

Hardware for metal doors, metal frames or items to be attached to masonry or ceramic tile floors or walls shall be supplied with proper machine screws, lead shields, toggle bolts or other approved fastening devices required to provide the best means of application.

The location of the hardware shall be as follow unless otherwise shown on the plans. Doorknobs shall be centered 38” above finished floor. The upper edge of top hinges shall be at 5” below the dead of frame and the lower edge of bottom hinges at 10” above finished floor. Center hinges shall be located at an equal distance between the top and bottom hinges.

Door hinges shall be 0.134 steel, 4” wide by 4-1/2” long.

Door mutes shall be provided for metal door frames.

Door stops shall be provided for door knob at the location it may strike walls or trim.

Door closer shall be provided for exterior door and as designated on the plans. Closers shall meet ANSI A117.1 for opening force requirements for handicapped access and ANSI 156.4 grade 1.

Cylindrical Lever Set shall be as scheduled on the plans and as described herein. Lever set shall be certified under ANSI A156.2 Series 4000 for Grade 2. The Lever set shall be ADA approved lever operated. The contractor shall provide the Project Engineer with 3 functioning key for the lever set.

Thresholds, weather striping, door bottoms and drip caps shall be provided on the exterior door. Thresholds shall not exceed ½” in height raised thresholds and floor level changes at doorways shall be beveled with a slope no greater than 1:2.

Screen Door shall be a 3’6” X 7’0” aluminum screen door including frame and hardware for manufacturers suggested installation.

Submittals- The contractor shall provide 3 copies of submittals to the Project Engineer for the following items prior to installation.

Item	Brochures Description	Color Patterns	Installation Procedures
Hardware	X		
Metal Doors and Frames	X		X
Paint	X	X	

ELECTRONIC COPY -- NOT FOR BID SUBMITTAL

Screen Door	X		X

Upon completion of the job and prior to final acceptance the contractor shall lubricate and adjust all hardware according to the manufacturer's recommendations.

Payment shall be made at the contract unit price, which shall include all materials, tools, equipment, labor and incidentals and the performance of all work necessary to complete the item.

Item S-005, Exterior Door, per Each.

ITEM S-006, DROP CEILING SYSTEM (D02 01/09): This item consists removing all components of the existing drop ceiling system and installing a new drop ceiling system in accordance with plans and specifications.

The contractor shall remove all components of the drop ceiling system. It shall be the responsibility of the contractor to properly dispose of all materials removed.

This item shall include all materials and cost included to install the drop ceiling system. This includes but is not limited to the ceiling panels, frame work, fasteners, hangers, etc.

Ceiling shall be acoustical tile suspended from steel roof beams of the control house. Acoustic tile shall have a finish as selected by the Project Engineer. Materials shall conform to ASTM C 635-97, ASTM C 636-96, and ASTM C 367-99. Ceiling shall be constructed to the details and of materials shown on the drawings and/or as specified.

Steel framing components for suspended ceiling shall comply with ASTM C 645 and ASTM C 754. Wire ties and wire hangers shall comply with ASTM A 641. Carrying channels shall be cold-rolled steel, 1 ½ inch diameter. Furring channels shall be 7/8 inch deep cold-rolled channels. Hot-dip galvanizing coating shall comply with ASTM A 653 for framing of suspended ceiling within 10 feet of exterior walls.

Steel framing components for partions shall comply with ASTM C 645. Studs and runners shall be 0.0179 inch thick. Rigid hat shaped furring channels shall be 0.179 inch thick. Furring brackets shall be adjustable serrated-arm type fabricated from corrosion-resistant steel sheet 0.0329 inch thick. Resilient furring channels shall be ½ inch deep. Z-furring (Z-shaped) members with face flanged of 1-1/4 inch wall attachment flanged of 7/8 inch and in depth required by insulation. Hot dip galvanized coating shall comply with ASTM A 653 for framing members attached to and within 10 feet of exterior walls.

Submittals- The contractor shall provide 3 copies of submittals to the Project Engineer for the following items prior to installation.

Item	Brochures Description	Color Patterns	Installation Procedures	Samples
Ceiling Suspension System	X		X	X
Ceiling Tiles	X	X		X

Payment shall be made at the contract unit price, which shall include all materials, tools, equipment, labor and incidentals and the performance of all work necessary to complete the item.

Item S-006, Drop Ceiling System, per Lump Sum.

ELECTRONIC COPY -- NOT FOR BID SUBMITTAL

ITEM S-007, METAL PANELING (D02 01/09): This item consists removing all components of the existing metal paneling and installing a new metal paneling within the control house in accordance with plans and specifications.

The contractor shall remove all components of the existing metal paneling including metal trim. It shall be the responsibility of the contractor to properly dispose of all materials removed.

This item shall include all materials and cost included to installing new metal paneling and metal trim on edges. The metal paneling and metal trim shall be equivalent in thickness and material to the existing metal.

The painting of the metal paneling and trim shall be included in item S-011 Painting and Cleaning Interior of Control House.

Submittals- The contractor shall provide 3 copies of submittals to the Project Engineer for the following items prior to installation.

Item	Brochures Description
Metal Paneling	X

Payment shall be made at the contract unit price, which shall include all materials, tools, equipment, labor and incidentals and the performance of all work necessary to complete the item.

Item S-007, Metal Paneling, per Lump Sum.

ITEM S-008, INTERIOR DOOR (D02 01/09): This item consists removing all components of the existing interior door and door frame, and installing a new metal door frame, metal door, and hardware in accordance with plans, specifications, and to current building codes.

The contractor shall furnish and install a door and frame which comply with ANSI/ICC A117.1. The door top closures shall be flush with top or faces and edges. The door texture shall have smooth faces. The door and frame shall be prepared for hardware in accordance with BHMA A156.115, with reinforcement welded in place, in addition to other requirements specified in door grade standard. The door and frame shall be factory primed and ready for field finishing. The interior door shall meet ANSI A250.8 Level 1, physical performance Level C, Model 1, full flush. The door core shall be made of cardboard honeycomb. The door dimensions shall be 2-0” wide, 6’-8” tall, and 1-3/4” thick. The door frame shall be from the same manufacturer as the door. The door frame should be as recommended by the manufacturer. The contractor shall follow on manufacturers suggestions for installation of the door and frame.

Hardware: Any item not specifically mentioned but necessary for the completion of work shall be of the most suitable type matching the quality and finish of items that are herein described.

All items of hardware to be fastened to metal or pre-finished doors and/or frames shall be furnished to template. The contractor shall furnish templates and/or samples of approved hardware to the respective door and frame suppliers.

Hardware for metal doors, metal frames or items to be attached to masonry or ceramic tile floors or walls shall be supplied with proper machine screws, lead shields, toggle bolts or other approved fastening devices required to provide the best means of application.

ELECTRONIC COPY -- NOT FOR BID SUBMITTAL

The location of the hardware shall be as follow unless otherwise shown on the plans. Doorknobs shall be centered 38" above finished floor. The upper edge of top hinges shall be at 5" below the dead of frame and the lower edge of bottom hinges at 10" above finished floor. Center hinges shall be located at an equal distance between the top and bottom hinges.

Door hinges shall be 0.134 steel, 4" wide by 4-1/2" long.

Door stops shall be provided for door knob at the location it may strike walls or trim.

Cylindrical Lever Set shall be as scheduled on the plans and as described herein. Lever set shall be certified under ANSI A156.2 Series 4000 for Grade 2. The Lever set shall be ADA approved lever operated.

Submittals- The contractor shall provide 3 copies of submittals to the Project Engineer for the following items prior to installation.

Item	Brochures Description
Wood Door, Frame, and Hardware	X

Upon completion of the job and prior to final acceptance the contractor shall lubricate and adjust all hardware according to the manufacturer's recommendations.

Payment shall be made at the contract unit price, which shall include all materials, tools, equipment, labor and incidentals and the performance of all work necessary to complete the item.

Item S-008, Interior Door, per Each.

ITEM S-009, ELECTRICAL WORK (D02 01/09): This item consists removing and replacing the following electrical components located within the control house and control house canopy: wiring, conduit, junction boxes, switches, receptacles, miscellaneous items needed to complete work. All wiring for all electrical components within the control house and control house canopy excluding the operator control panel shall be included. All wiring shall be included from electrical components to the panel board. The contractor shall be responsible for proper disposal of all materials removed. All electrical components shall be replaced in accordance with plans and as specified herein. The contractor shall replace all components up to current codes. The cost of installing electrical components to current codes shall be included in this item.

All material and construction shall conform to the requirements of all building codes, sanitary codes and ordinances in force in the locality in which the work is done. All materials and construction shall also conform to the rules and regulations of the National Fire Protection Association, Underwriter's Laboratories, American Society of Heating, Refrigeration, and Air Conditioning Engineers (ASHRAE), National Electric Code (NEC), and Section 730 of the Louisiana Standard Specifications for Roads and Bridges.

Upon completion of the project, the contractor shall furnish a set of plans which reflect the final as built condition of the electrical work completed in the project. The drawings shall reflect all plan changes, and include a complete equipment list showing each manufacturer's name and catalog or shop drawing number for each piece of equipment furnished. Drawings shall have a title block showing the project number, name, parish, contractor, and date.

All new components shall be installed in same location as the existing locations.

ELECTRONIC COPY -- NOT FOR BID SUBMITTAL

Payment shall be made at the contract unit price, which shall include all materials, tools, equipment, labor and incidentals and the performance of all work necessary to complete the item.

Item S-009, Electrical Work, per Lump Sum.

ITEM S-010, LAVATORY EXHAUST FAN (D02 01/09): This item consists removing all components of the existing lavatory exhaust fan and installing a new lavatory exhaust fan on plans and specified herein. All cost for installing lavatory exhaust fan shall be included in this item, which shall include the fan and all hardware required to properly mount fan. All electrical work shall be conducted in a manner to comply with current building codes.

The fan shall have a minimum capacity of 110 cfm. The fan shall be designed with a horizontal discharge. The fan shall be supported on the suspended ceiling system and from the roof joist by vibration dampening hangers. The fan housing shall be heavy-gauge steel with stainless steel fasteners. The fan motor shall be permanently lubricated and mounted in a compartment sealed from the air stream. The fan shall be equipped with a back draft damper that shall open/close when the fan motor is energized/de-energized.

Submittals- The contractor shall provide 3 copies of submittals to the Project Engineer for the following items prior to installation.

Item	Brochures Description
Lavatory Exhaust Fan	X

Upon completion of the job and prior to final acceptance the contractor shall lubricate and adjust all hardware according to the manufacturer's recommendations.

Payment shall be made at the contract unit price, which shall include all materials, tools, equipment, labor and incidentals and the performance of all work necessary to complete the item.

Item S-010, Lavatory Exhaust Fan, per Each.

ITEM S-011, CLEANING AND PAINTING OF INTERIOR OF CONTROL HOUSE (D02 01/09): This item shall consists of providing all labor, tools and materials necessary for the cleaning and painting the interior of the control house as indicated by the drawings and herein. Areas to be cleaned and painted shall be all interior walls of control house, all doors (interior and exterior) of control house, and interior concrete walls. The floor of the control house shall only be cleaned and not painted.

All material and construction shall conform to the requirements of all building codes, sanitary codes and ordinances in force in the locality in which the work is to be done.

The contractor shall be responsible for cleaning all doors (interior & exterior), interior walls, and floor of the control house. The doors, walls, and floor shall be cleaned to the satisfaction of the Project Engineer, and free of all dirt, debris, etc. prior to painting.

The painting of interior concrete walls shall consist of 2-coats of epoxy paint. The color of the paint shall be determined by the Project Engineer.

Exposed metals including doors, door frames, trim, metal paneling, except copper, aluminum, stainless steel, and plated metals, shall be painted 1-coat metal primer (or zinc primer

ELECTRONIC COPY -- NOT FOR BID SUBMITTAL

for zinc coated metals) and 2-coats alkyd gloss enamel. Shop coated materials are not required to be painted with primer.

The contractor shall be responsible for moving any objects or obstructions needed to complete the cleaning and painting. Upon completion the contractor shall restore any object moved to its original location.

Payment shall be made at the contract unit price, which shall include all materials, tools, equipment, labor and incidentals and the performance of all work necessary to complete the item.

Item S-011, Cleaning and Painting of Interior of Control House, per Lump Sum.

ITEM S-012, AIR COMPRESSOR (D02 01/09): This item consists removing all components of the existing air compressor and furnishing and installing a new air compressor as shown on plans and specified herein. All cost for installing unit shall be included in this item. The compressor is used to operate the navigation horn and is located on a machinery platform on the lower level of the pier below the control house. The contractor shall be responsible for removing and disposing the existing compressor.

The contractor shall furnish a ¾ hp, 240 volt, 60 Hertz capable of providing 4.4 cubic feet displacement. The compressor shall have a pressure "cut-in" at 120 psi and "cut-out" at 150 psi. The compressor shall be complete with a 30 gal tank with a 1" valve strainer, drain cock, gauge and vertical belt guard. The motor shall be weather proof. The contractor shall have the selected compressor approved by the Project Engineer prior to installation. The compressor shall be installed in the same location as the existing unit.

Submittals- The contractor shall provide 3 copies of submittals to the Project Engineer for the following items prior to installation.

Item	Brochures Description
Air Compressor	X

Payment shall be made at the contract unit price, which shall include all materials, tools, equipment, labor and incidentals and the performance of all work necessary to complete the item.

Item S-012, Air Compressor, per Each.

ITEM S-013, FLOURECENT LIGHT FIXTURES (D02 01/09): This item consists removing all components of the existing light fixtures and installing a new fixtures in the control house as shown on plans and specified herein. All cost for installing light fixtures shall be included in this item, which shall include the light fixture, housing, bulbs, and any other miscellaneous item needed for installation. All electrical work shall be conducted in a manner to comply with current building codes.

There are 6 fixtures located within the control house. 5 fixtures are located in the control room and 1 located in the lavatory. The 5 fixtures in the control room shall be 2' by 4' die-formed fluorescent fixtures complete with 4 lamps each. The fixtures shall be complete with dimming ballasts and acrylic refractors. The light fixture located in the lavatory shall be a 1' by

ELECTRONIC COPY -- NOT FOR BID SUBMITTAL

4' die-formed fluorescent fixtures complete with 2 lamps. The fixtures shall be complete with dimming ballasts and acrylic refractors. The contractor shall be responsible to provide fixtures which are compatible with the suspended ceiling system. The contractor shall be responsible for providing and installing bulbs after installation. The fixtures shall be installed in the same location as the existing fixtures. The fixtures selected shall be approved by the Project Engineer prior to installation.

Submittals- The contractor shall provide 3 copies of submittals to the Project Engineer for the following items prior to installation.

Item	Brochures Description
Light Fixtures	X

Upon completion of the job and prior to final acceptance the contractor shall lubricate and adjust all hardware according to the manufacturer's recommendations.

Payment shall be made at the contract unit price, which shall include all materials, tools, equipment, labor and incidentals and the performance of all work necessary to complete the item.

Item S-013, Fluorescent Light Fixtures, per Lump Sum.

ITEM S-014, REPAIR TRAFFIC WARNING SIGNALS (D02 01/09): This item consists repairing the existing traffic warning signal as shown on plans and specified herein. All cost for repairing unit shall be included in this item. The repair shall consist of removing and replacing all mounting hardware. The existing lights shall be reused. The contractor shall replace all mounting hardware with new components as shown in plans. All components shall be approved by the Project Engineer prior to installation. The contractor shall be responsible for re-aligning the lights to the satisfaction of the project engineer after replacing mounting hardware.

Payment shall be made at the contract unit price, which shall include all materials, tools, equipment, labor and incidentals and the performance of all work necessary to complete the item.

Item S-014, Repair Traffic Warning Signals, per Each.

ITEM S-015, REPAIR SPAN LIGHTS (D02 01/09): This item consists repairing the existing span lights as shown on plans and specified herein. All cost for repairing unit shall be included in this item. The span lights are located on both sides of the bridge directly above the centerline of the channel. There are two lights on each side of the bridge. The repair shall consist of the contractor troubleshooting the existing electrical wiring. The contractor shall determine any shorts in wiring and replace. Payment for the item shall not be made until the light is fully functional to the satisfaction of the Project Engineer.

Payment shall be made at the contract unit price, which shall include all materials, tools, equipment, labor and incidentals and the performance of all work necessary to complete the item.

Item S-015, Repair Span Lights, per Each.

ELECTRONIC COPY -- NOT FOR BID SUBMITTAL

CONTRACT TIME (03/05): The entire contract shall be completed in all details and ready for final acceptance in accordance with Subsection 105.17(b) within Thirty (30) working days.

Prior to assessment of contract time, the contractor will be allowed 30 calendar days from the date stipulated in the Notice to Proceed to commence with portions of the contract work including but not limited to assembly periods, preparatory work for materials fabrications such as test piles, or other activities which hinder progress in the beginning stages of construction. Prior to issuance of the Notice to Proceed, the Department will consider extending the assembly period upon written request from the contractor justifying the need for additional time.

The contractor shall be responsible for maintenance of traffic from the beginning of the assembly period. During the assembly period, the contractor will be allowed to do patching and other maintenance work necessary to maintain the roadway with no time charges when approved by the engineer.

If the contractor begins regular construction operations prior to expiration of the assembly period, the assessment of contract time will commence at the time construction operations are begun.

ELECTRONIC COPY -- NOT FOR BID SUBMITTAL

(08/08)

LOUISIANA
DEPARTMENT OF TRANSPORTATION AND DEVELOPMENT
SUPPLEMENTAL SPECIFICATIONS

(FOR 2006 STANDARD SPECIFICATIONS)

TABLE OF CONTENTS

PART I – GENERAL PROVISIONS

SECTION 101 – GENERAL INFORMATION, DEFINITIONS, AND TERMS
Subsection 101.03 – Definitions 1
SECTION 102 – BIDDING REQUIREMENTS
Subsection 102.09 – Proposal / Bid Guaranty 1
SECTION 107 – LEGAL RELATIONS AND RESPONSIBILITY TO PUBLIC
Subsection 107.05 – Federal Aid Participation 2
SECTION 108 – PROSECUTION AND PROGRESS
Subsection 108.04 – Prosecution of Work 2

PART II – EARTHWORK

SECTION 202 – REMOVING OR RELOCATING STRUCTURES AND OBSTRUCTIONS
Subsection 202.06 – Plugging or Relocating Existing Water Wells 2

PART III – BASE COURSES

SECTION 302 – CLASS II BASE COURSE
Subsection 302.05 – Mixing 2
SECTION 305 – SUBGRADE LAYER
Subsection 305.06 – Payment 2
SECTION 307 – PERMEABLE BASES
Subsection 307.02 – Materials 3
SECTION 308 – IN-PLACE CEMENT TREATED BASE COURSE
All Subsections 3

PART V – ASPHALTIC PAVEMENTS

SECTION 502 – SUPERPAVE ASPHALTIC CONCRETE MIXTURES
Subsection 502.02 – Materials 3
Subsection 502.14 – Lot Sizes 4
SECTION 508 – STONE MATRIX ASPHALT
Subsection 508.01 – Description 5
Subsection 508.02 – Materials 5

ELECTRONIC COPY -- NOT FOR BID SUBMITTAL

PART VI – RIGID PAVEMENT

SECTION 602 – PORTLAND CEMENT CONCRETE PAVEMENT REHABILITATION
Subsection 602.17 – Payment 5

PART VII – INCIDENTAL CONSTRUCTION

SECTION 701 – CULVERTS AND STORM DRAINS
All Subsections 5
SECTION 704 – GUARD RAIL
Subsection 704.03 – General Construction Requirements 16
SECTION 706 – CONCRETE WALKS, DRIVES AND INCIDENTAL PAVING
All Subsections 16
SECTION 713 – TEMPORARY TRAFFIC CONTROL
Subsection 713.06 – Pavement Markings 18
SECTION 729 – TRAFFIC SIGNS AND DEVICES
Subsection 729.02 – Materials 19
Subsection 729.04 – Fabrication of Sign Panels and Markers 20

PART VIII – STRUCTURES

SECTION 804 – DRIVEN PILES
Subsection 804.08 – Construction Requirements 20

PART IX – PORTLAND CEMENT CONCRETE

SECTION 901 – PORTLAND CEMENT CONCRETE
Subsection 901.06 – Quality Control of Concrete 20
Subsection 901.08 – Composition of Concrete 20

PART X – MATERIALS

SECTION 1001 – HYDRAULIC CEMENT
Subsection 1001.01 – Portland Cement 21
SECTION 1003 – AGGREGATES
Subsection 1003.02 – Aggregates for Portland Cement Concrete and Mortar 21
SECTION 1005 – JOINT MATERIALS FOR PAVEMENTS AND STRUCTURES
Subsection 1005.04 – Combination Joint Former/Sealer 22
SECTION 1006 – CONCRETE AND PLASTIC PIPE
Subsection 1006.09 – Plastic Yard Drain Pipe 23

ELECTRONIC COPY -- NOT FOR BID SUBMITTAL

SECTION 1013 – METALS
Subsection 1013.09 – Steel Piles 23
SECTION 1015 – SIGNS AND PAVEMENT MARKINGS
Subsection 1015.04 – Sign Panels 23
Subsection 1015.05 – Reflective Sheeting.....24
Subsection 1015.11 – Preformed Plastic Pavement Marking Tape.....28
SECTION 1020 – TRAFFIC SIGNALS
Subsection 1020.01 – Traffic Signal Heads.....29
Subsection 1020.04 – Poles for Traffic Signal Systems.....30

ELECTRONIC COPY -- NOT FOR BID SUBMITTAL

LOUISIANA
DEPARTMENT OF TRANSPORTATION AND DEVELOPMENT
SUPPLEMENTAL SPECIFICATIONS

The 2006 Louisiana Standard Specifications for Roads and Bridges and supplemental specifications thereto are amended as follows.

PART I – GENERAL PROVISIONS

SECTION 101 – GENERAL INFORMATION, DEFINITIONS, AND TERMS:
Subsection 101.03 – Definitions (07/07), Pages 3 – 13).

Delete the definition for "Proposal/Bid Guaranty" and substitute the following.

Proposal / Bid Guaranty. The required security furnished with a bid. The only form of security acceptable is a Bid Bond.

SECTION 102 – BIDDING REQUIREMENTS:
Subsection 102.09 – Proposal / Bid Guaranty (07/07), Page 19.

Delete the contents of this subsection and substitute the following.

PROPOSAL/BID GUARANTY. Each bid shall be accompanied by a proposal/bid guaranty in an amount not less than five percent of the total bid amount when the bidder's total bid amount as calculated by the Department in accordance with Subsection 103.01 is greater than $50,000. No proposal/bid guaranty is required for projects when the bidder's total bid amount as calculated by the Department is $50,000 or less. The official total bid amount for projects that include alternates is the total of the bidder's base bid and all alternates bid on and accepted by the Department. The proposal/bid guaranty submitted by the bidder shall be a bid bond made payable to the contracting agency as specified on the bid bond form provided in the construction proposal. No other form of security will be accepted.

The bid bond shall be on the "Bid Bond" form provided in the construction proposal, on a form that is materially the same in all respects to the "Bid Bond" form provided, or on an electronic form that has received Department approval prior to submission. The bid bond shall be filled in completely, shall be signed by an authorized officer, owner or partner of the bidding entity, or each entity representing a joint venture; shall be signed by the surety's agent or attorney-in-fact; and shall be accompanied by a notarized document granting general power of attorney to the surety's signer. The bid bond shall not contain any provisions that limit the face amount of the bond.

The bid bond will be written by a surety or insurance company that is in good standing and currently licensed to write surety bonds in the State of Louisiana by the Louisiana Department of Insurance and also conform to the requirements of LSA-R.S. 48:253.

All signatures required on the bid bond may be original, mechanical reproductions, facsimiles or electronic. Electronic bonds issued in conjunction with electronic bids must have written Departmental approval prior to use. The Department will make a listing of approved electronic sureties providers on the Bidx.com site.

ELECTRONIC COPY -- NOT FOR BID SUBMITTAL

SECTION 107 – LEGAL RELATIONS AND RESPONSIBILITY TO PUBLIC:
Subsection 107.05 – Federal Aid Participation (04/08), Pages 57 and 58.

Delete the second paragraph.

SECTION 108 – PROSECUTION AND PROGRESS:
Subsection 108.04 – Prosecution of Work (03/05) Pages 74 and 75.

Add the following sentence to the third paragraph of Heading (b).

Should the surety or the Department take over prosecution of the work, the contractor shall remain disqualified for a period of one year from the completion of the project, unless debarment proceedings are instituted.

When the Department of Transportation and Development is not the contracting agency on the project, the second paragraph under Heading (c) is deleted.

PART II – EARTHWORK

SECTION 202 – REMOVING OR RELOCATING STRUCTURES AND OBSTRUCTIONS:
Subsection 202.06 – Plugging or Relocating Existing Water Wells (03/04), Page 105.

Delete the first sentence and substitute the following.

All abandoned wells shall be plugged and sealed at the locations shown on the plans, or as directed by the engineer, in accordance with the "Water Well Rules, Regulations, and Standards, State of Louisiana." This document is available at the Department of Transportation and Development, Water Resources Section, P. O. Box 94245, Baton Rouge, Louisiana 70804-9245. The Water Resource Section's telephone number is (225) 274-4172.

PART III – BASE COURSES

SECTION 302 – CLASS II BASE COURSE:
Subsection 302.05 – Mixing (08/06), Pages 152 and 153.

Delete the first sentence of Subheading (b)(1), In-Place Mixing, and substitute the following.

In-place mixing shall conform to Heading (a)(1) except that the percentage of Type I portland cement required will be 6 percent by volume.

SECTION 305 – SUBGRADE LAYER:
Subsection 305.06 – Payment (01/08), Page 184.

Delete the contents of this subsection and substitute the following.

305.06 Payment. Payment for subgrade layer will be made at the contract unit price which includes lime, lime treatment, cement, cement treatment, water, stone, recycled portland cement concrete, crushed slag, blended calcium sulfate, asphaltic concrete, and asphalt curing membrane or prime coat, subject to the payment adjustment provisions of Section 1002 for specification deviations of asphalt materials and Subsection 303.11(a) for density deficiencies of cement treated materials. Adjustments in pay for increase or decrease in the percent cement ordered by the engineer will be in accordance with Subsection 303.13. Adjustments in pay for

ELECTRONIC COPY -- NOT FOR BID SUBMITTAL

increase or decrease in the percent lime ordered by the engineer will be based on the price of lime shown on paid invoices (total of all charges). The Materials and Testing Section will provide the payment adjustment percentage for properties of asphalt materials.

Payment for geotextile fabric will be included in the contract unit price for subgrade layer.

Payment will be made under:

Item No.	Pay Item	Pay Unit
305-01	Subgrade Layer _____in (mm) Thick	Square Yard (Sq m)

SECTION 307 – PERMEABLE BASES:

Subsection 307.02 – Materials (09/07), Pages 187 and 188.

Delete the contents of Subheading (b), Asphalt, and substitute the following.

(b) Asphalt: The asphalt for asphalt treated permeable base shall be an approved polymer modified asphalt cement, PG 76-22m, or PG 82-22rm complying with Section 1002. The percentage of asphalt cement shall be 2.0 percent to 4.0 percent by weight (mass) of the total mixture. Asphalt cement content and mixing process shall be such that all aggregates are visibly coated. The mixture shall retain 90 percent coating when tested in accordance with DOTD TR 317.

A job mix formula shall be submitted and approved in accordance with Section 502.

SECTION 308 – IN-PLACE CEMENT TREATED BASE COURSE:

All Subsections within Section 308 – (07/07), Pages 191 – 198.

Whenever the reference to "DOTD TR-432, Method D" is used, it shall mean "DOTD TR-432".

PART V – ASPHALTIC PAVEMENTS

SECTION 502 – SUPERPAVE ASPHALTIC CONCRETE MIXTURES:

Subsection 502.02 – Materials (08/06) (11/07), Pages 210 – 213.

Delete Table 502-2, Superpave Asphalt Cement Usage under Subheading (a) and substitute the following.

ELECTRONIC COPY -- NOT FOR BID SUBMITTAL

Table 502-2
Superpave Asphalt Cement Usage

Current Traffic Load Level	Mixture Type	Grade of Asphalt Cement
Level 1	Wearing Course	PG 70-22m
	Binder Course	PG 70-22m
	Base Course	PG 64-22
Level 2	Wearing Course	PG 76-22m
	Binder Course	PG 76-22m
Level A	Incidental Paving	PG 70-22m

Note: A PG 82-22 rm, Waste Tire Rubber Modified Asphalt, may be substituted for any other grade of asphalt cement.

Delete Table 502-3, Aggregate Friction Rating under Subheading (c)(1) and substitute the following.

Table 502-3
Aggregate Friction Rating

Friction Rating	Allowable Usage
I	All mixtures
II	All mixtures
III	All mixtures, except travel lane wearing courses with plan ADT greater than 7000[1]
IV	All mixtures, except travel lane wearing courses[2]

[1] When plan current average daily traffic (ADT) is greater than 7000, blending of Friction Rating III aggregates and Friction Rating I and/or II aggregates will be allowed for travel lane wearing courses at the following percentages. At least 30 percent by weight (mass) of the total aggregates shall have a Friction Rating of I, or at least 50 percent by weight (mass) of the total aggregate shall have a Friction Rating of II. The frictional aggregates used to obtain the required percentages shall not have more than 10 percent passing the No. 8 (2.36 mm) sieve.

[2] When the average daily traffic (ADT) is less than 2500, blending of Friction Rating IV aggregates with Friction Rating I and/or II aggregates will be allowed for travel lane wearing courses at the following percentages. At least 50 percent by weight (mass) of the total aggregate in the mixture shall have a Friction Rating of I or II. The frictional aggregates used to obtain the required percentages shall not have more than 10 percent passing the No. 8 (2.36 mm) sieve.

<u>Subsection 502.14 – Lot Sizes (11/07), Pages 232 and 233.</u>

Delete the first sentence of the first paragraph and substitute the following.

ELECTRONIC COPY -- NOT FOR BID SUBMITTAL

A lot is a segment of continuous production of asphaltic concrete mixture from the same job mix formula produced for the Department at a specific plant, delivered to a specific DOTD project.

SECTION 508 – STONE MATRIX ASPHALT:

Subsection 508.01 – Description (09/07), Page 274.

Delete this subsection and substitute the following.

508.01 DESCRIPTION. This work consists of furnishing and constructing Stone Matrix Asphalt (SMA) which is a plant mixed asphalt concrete wearing course for high traffic applications. This mixture is a rut resistant hot mix design with stone on stone contact. The mixture shall be composed of a PG 76-22m, or PG 82-22rm asphalt cement and a gap graded coarse aggregate structure. Mineral filler and/or fibers shall be used to control draindown. This work shall be in accordance with these specifications, plan details, and as directed. All requirements of Section 502 apply to Stone Matrix Asphalt, except as modified herein. All plant and paving equipment and processes must meet the requirements of Section 503.

Mixture used for shoulder may be Stone Matrix Asphalt or any mixture type shown in Table 502-5.

Subsection 508.02 – Materials (09/07), Page 274.

Delete the contents of subheading (a), Asphalt Cement and substitute the following.

(a) Asphalt Cement: Asphalt cement shall be PG 76-22m, or PG 82-22rm as listed on QPL 41 and complying with Section 1002.

PART VI – RIGID PAVEMENT

SECTION 602 – PORTLAND CEMENT CONCRETE PAVEMENT REHABILITATION:

Subsection 602.17 – Payment (09/07), Pages 341 – 344.

Delete the last paragraph of Subheadings (d), Full Depth Corner Patching of Jointed Concrete Pavement, (e) Full Depth Patching of Jointed Concrete Pavement, and (g) Patching Continuously Reinforced Concrete Pavement, and substitute the following.

Payment for deteriorated base course removed as directed by the engineer and replaced with concrete will be made as follows: The value per inch (mm) thickness will be determined by dividing the contract unit price per square yard (sq m) by the plan thickness. Thickness of patches will be measured from the surface that exists at the time of patching. Payment for the additional thickness will be made at 50 percent of the value per inch (mm) thus determined.

PART VII – INCIDENTAL CONSTRUCTION

SECTION 701 – CULVERTS AND STORM DRAINS:

All Subsections within Section 701 (08/07), Pages 347 – 358.

Delete Section 701, Culverts and Storm Drains and substitute the following.

ELECTRONIC COPY -- NOT FOR BID SUBMITTAL

SECTION 701
CULVERTS AND STORM DRAINS

701.01 DESCRIPTION. This work consists of furnishing, installing, and cleaning pipe, pipe arch, storm drains and sewers, also referred to as culverts or conduit, in accordance with these specifications and in conformity with lines and grades shown on the plans or established.

701.02 MATERIALS. Materials shall comply with the following sections and subsections:

Usable Soil	203.06(a)
Selected Soil	203.06(b)
Plastic Soil Blanket	203.10
Mortar	702.02
Flowable Fill	710
Portland Cement Concrete	901
Reclaimed Asphaltic Pavement (RAP)	1003.01 & 1003.04(d)
Stone	1003.03(b)
Recycled Portland Cement Concrete	1003.03(c)
Granular Material	1003.07
Bedding Material	1003.08
Concrete Sewer Pipe	1006.02
Reinforced Concrete Pipe	1006.03
Reinforced Concrete Pipe Arch	1006.04
Gasket Materials	1006.06
Plastic Pipe	1006.07
Split Plastic Coupling Bands	1006.07(d)(4)
Plastic Yard Drain Pipe	1006.09
Bituminous Coated Corrugated Steel Pipe and Pipe Arch	1007.02
Structural Plate for Pipe, Pipe Arch and Arch	1007.04
Corrugated Aluminum Pipe and Pipe Arch	1007.05
Coupling Bands	1007.09
Reinforcing Steel	1009
Geotextile Fabric	1019

(a) Side Drain Pipe or Side Drain Pipe Arch: When the item for Side Drain Pipe or Side Drain Pipe Arch is included in the contract, the contractor has the option of furnishing reinforced concrete pipe or reinforced concrete pipe arch, corrugated metal pipe or corrugated metal pipe arch, or plastic pipe, as allowed by EDSM II.2.1.1 or unless otherwise specified.

(b) Cross Drain Pipe or Cross Drain Pipe Arch: When the item for Cross Drain Pipe or Cross Drain Pipe Arch is included in the contract, the contractor has the option of furnishing reinforced concrete pipe or reinforced concrete pipe arch, corrugated metal pipe or corrugated metal pipe arch, or plastic pipe, as allowed by EDSM II.2.1.1 or unless otherwise specified.

ELECTRONIC COPY -- NOT FOR BID SUBMITTAL

(c) Storm Drain Pipe or Storm Drain Pipe Arch: When the item for Storm Drain Pipe or Storm Drain Pipe Arch is included in the contract, the contractor has the option of furnishing reinforced concrete pipe or reinforced concrete pipe arch, or plastic pipe, as allowed by EDSM II.2.1.1 or unless otherwise specified.

(d) Yard Drain Pipe: When the item for Yard Drain Pipe is included in the contract, the contractor has the option of furnishing concrete sewer pipe, plastic yard drain pipe or plastic pipe in accordance with Section 1006 unless otherwise specified.

(e) Material Type Abbreviations:

(1) Reinforced Concrete Pipe:

RCP	Reinforced Concrete Pipe
RCPA	Reinforced Concrete Pipe Arch

(2) Corrugated Metal Pipe:

CAP	Corrugated Aluminum Pipe
CAPA	Corrugated Aluminum Pipe Arch
CMP	Corrugated Metal Pipe
CMPA	Corrugated Metal Pipe Arch
CSP	Corrugated Steel Pipe
CSPA	Corrugated Steel Pipe Arch
BCCSP	Bituminous Coated Corrugated Steel Pipe
BCCSPA	Bituminous Coated Corrugated Steel Pipe Arch

(3) Plastic Pipe:

PP	Plastic Pipe
PVCP	Polyvinyl Chloride Pipe
RPVCP	Ribbed Polyvinyl Chloride Pipe
CPEPDW	Corrugated Polyethylene Pipe Double Wall

(f) Joint Type Abbreviations:

T1	Type 1 Joint
T2	Type 2 Joint
T3	Type 3 Joint

(g) Quality Assurance for Pipe: Manufacturing plants will be periodically inspected for compliance with specified manufacturing methods, and material samples will be randomly obtained for laboratory testing for verification of manufacturing lots. Materials approved at the manufacturing plant will be subject to visual acceptance inspections at the jobsite or point of delivery.

701.03 EXCAVATION. For all pipe, when the sides of the trench are stable as evidenced by the sides of the trench being able to maintain a vertical cut face, the minimum trench width at the bottom of the excavation will be 18 inches (460mm) on either side of the outside diameter of the pipe. If the sides of the trench are unstable, the width of the trench at the bottom of the excavation, for plastic or metal pipe, shall be a minimum width of at least 18 inches (460mm) or one pipe diameter on each side of the outside diameter of the pipe, which ever is greater. Surplus material or excavated material that does not conform to the requirements of Subsection 203.06(a) shall be satisfactorily disposed of in accordance with Subsection 202.02. Moisture controls

ELECTRONIC COPY -- NOT FOR BID SUBMITTAL

including backfill materials selection and dewatering using sumps, wells, well points or other approved processes may be necessary to control excess moisture during excavation, installation of bedding, over-excavated trench backfilling, pipe placement and pipe backfill.

(a) Over-excavation: When unsuitable soils as defined in Subsection 203.04 or a stable, non-yielding foundation cannot be obtained at the established pipe grade, or at the grade established for placement of the bedding, unstable or unsuitable soils below this grade shall be removed and replaced with granular material meeting the requirements of Subsection 1003.07, bedding materials meeting the requirements of Subsection 1003.08 or Type A backfill. All granular, backfill materials placed below the established pipe or bedding grade shall be placed in lifts not exceeding 8 inches (200 mm) thick and sufficiently compacted by hand or a dynamic mechanical hand compaction device over the surface of each lift to form a stable, non-yielding foundation at the surface of the established bedding or pipe grade.

When rock is encountered, it shall be removed below grade and replaced with material complying with Subsection 1003.07, bedding materials meeting the requirements of Subsection 1003.08 or Type A backfill. The compacted earth cushion shall have a thickness under the pipe of at least 1/2 inch per foot (40 mm/m) of fill height over the top of the pipe with a minimum thickness of 8 inches (200 mm). All granular, backfill materials placed below the established pipe or bedding grade shall be placed in lifts not exceeding 8 inches (200 mm) thick and sufficiently compacted by hand or a dynamic mechanical hand operated compaction device over the surface of each lift to form a stable, non-yielding foundation at the surface of the established bedding or pipe grade.

Materials used to backfill in an over-excavated portion of a trench do not require encasement in a Geotextile Fabric.

Density of approved materials placed in over-excavated trenches will not be measured or determined.

701.04 FORMING PIPE BED. Bedding material, when specified, shall be constructed in accordance with Section 726. Materials allowed for bedding shall be as specified in Subsection 1003.08 or may be Type A backfill materials. When bedding materials are specified, additional excavation shall be performed below established pipe grade and the bedding material placed in lifts not exceeding 8 inches (200 mm) thick and lightly compacted by hand or a dynamic hand compaction device over the surface of each lift.

When the bottom of the pipe is not laid in a trench but is constructed above natural soils, a uniform bed shall be constructed as specified for the bottom of a trench.

Density of approved bedding materials will not be measured or determined.

701.05 LAYING PIPE. Pipe laying shall begin at the downstream end of the line. The pipe shall be in contact with the foundation throughout its length. Bell or groove ends of pipe and outside circumferential laps of riveted metal pipe shall be placed facing upstream. Riveted seam metal pipe shall be placed with longitudinal laps at sides. Pipes in each continuous line shall have the same wall thickness. Metal pipes provided with lifting lugs shall be handled only by these lugs.

ELECTRONIC COPY -- NOT FOR BID SUBMITTAL

After pipe has been laid and before backfill is placed, the engineer will inspect the pipe for alignment, grade, integrity of joints, and coating damage.

701.06 JOINING PIPE.

(a) Joint Usage:

(1) Type 1 (T1) joints shall be used for side drains under drives and similar installations.

(2) Type 2 (T2) joints shall be used for cross drains under roadways, including turnouts.

(3) Type 3 (T3) joints shall be used for closed storm drain systems, flumes and siphons.

(b) Concrete Pipe: Concrete pipe may be either bell and spigot, or tongue and groove. The method of joining pipe sections shall be such that ends are fully entered and inner surfaces are flush and even.

An approved mechanical pipe puller shall be used for joining pipes over 36 inches (900 mm) in diameter. For pipe 36 inches (900 mm) or less in diameter, any approved method for joining pipe may be used which does not damage the pipe.

Joints shall comply with Subsection 1006.05, and shall be sealed with gasket material installed in accordance with the manufacturer's recommendations.

(c) Metal Pipe: Metal pipe shall be firmly joined by coupling bands. Bands shall be centered over the joint.

For Type 1 joints, approved gasket material shall be placed in one corrugation recess on each side of the joint at the coupling band and on each band connection in such manner to prevent leakage.

When Type 2 or 3 joints are specified, joining of metal pipe sections shall conform to the following provisions:

(1) General: Band joints shall be sealed with gasket material. Gasket material shall be placed in accordance with the plan details.

(2) Circular Section: Connecting bands shall be of an approved design and shall be installed in accordance with plan details.

(3) Arch Section: Connecting bands shall be a minimum of 12 inches (300 mm) wide for pipe arch less than 36 inches (900 mm) round equivalent diameter, and a minimum of 21 inches (525 mm) wide for 36 inches (900 mm) round equivalent diameter pipe arch and greater. Bands shall be connected at the ends by approved angle or strap connections. Connecting bands used for 36 inches (900 mm) round equivalent diameter pipe arch and above shall be 2-piece bands.

(d) Plastic Pipe: Joints for plastic pipe shall be either bell and spigot or split coupling bands.

(1) Bell and Spigot Type Joint System: The method of joining pipe sections shall be such that ends are fully entered and inner surfaces are flush and even.

Any approved method for joining pipe may be used which does not damage the pipe.

Joints shall be approved and shall be sealed with a gasket system utilizing gasket material complying with Subsection 1006.06(a).

ELECTRONIC COPY -- NOT FOR BID SUBMITTAL

(2) Split Coupling Type Joint System: Split coupling bands shall comply with all dimensional and material requirements of Subsection 1006.07. The bands shall be centered over the joint. The split coupling band shall be secured to the pipe with a minimum of five stainless steel or other approved corrosion resistant bands.

Joints shall be approved and shall be sealed with gasket material. Gasket material shall be placed in the first two corrugation recesses on each side of the pipe connections. Gasket material shall also be placed on each band connection to prevent leakage. When flexible plastic gasket material is used it shall be a minimum of 1/2 inch (13 mm) in size. The bands shall be tightened to create overlap of the band and shall adequately compress the gasket material.

(e) Connections: Approved connections shall be used when joining new pipes to existing pipes. When concrete collars are required in order to extend the ends of existing pipes that have been damaged or to join different types or sizes of pipes, the concrete collars shall be constructed in accordance with plan details, the applicable requirements of Section 901, and as directed.

(f) Geotextile Fabric, Pipe Joints: For concrete, metal and plastic pipes, Types 2 and 3 joints shall be wrapped with geotextile fabric for a minimum of 12 inches (300 mm) on each side of joint for pipe 36 inches (900 mm) or less in diameter and a minimum of 18 inches (450 mm) on each side of the joint for pipe greater than 36 inches (900 mm) in diameter. Ends of the fabric shall be lapped at least 10 inches (250 mm). The edges and ends of fabric shall be suitably secured for the entire circumference of the pipe.

701.07 RELAYING PIPE. If specified or directed, existing pipes shall be removed and suitable sections relaid as specified for new pipes.

701.08 BACKFILLING.

(a) General: Prior to backfilling, pipes found to be damaged or out of alignment or grade shall be removed and reinstalled, or replaced.

Type A backfill material shall be stone, recycled portland cement concrete, flowable fill, or RAP.

Type B backfill materials are selected soils. Where Type B backfill materials are called for, Type A backfill materials may be substituted.

When corrugated metal pipe is used, the backfill material shall be tested and shall have a resistivity greater than 1500 ohm-cm and a pH greater than 5 when tested in accordance with DOTD TR 429 and DOTD TR 430 respectively.

When Type A backfill material is used, geotextile fabric surrounding this backfill shall be placed in accordance with Subsection 726.03 between the aggregate backfill material and all other natural or placed soils in the trench or embankment. Care shall be taken to prevent damage to geotextile fabric during placement of backfill material. For concrete pipe, the fabric shall enclose not only the initial backfill but shall be wrapped over the top of the pipe with at least 12 inches (300 mm) of overlap.

When a trench box or trench sheeting is used in unstable soils and/or for worker safety, and when moved during backfilling operations, filling and additional compaction of the disturbed zone of backfill must take place immediately and in a manner acceptable to the engineer.

ELECTRONIC COPY -- NOT FOR BID SUBMITTAL

Initial backfill is a structural backfill encasing the pipe from the bottom of the pipe to the springline for concrete pipe and to a point one foot (0.3 m) above the top of the pipe for both metal and plastic pipe. Final backfill is not a structural backfill and shall extend from the top of the initial backfill to the top of the natural ground or subgrade in cut areas or to the top of existing ground in fill areas. Any fill required above the final backfill is considered and treated as embankment.

(b) Backfill Applications: For projects using A+B+C bidding method where rigid and flexible pavement alternates are considered, backfill application (2) below, "Cross Drains Under Flexible Pavements", shall apply for either rigid or flexible pavements.

(1) Under Concrete Pavements: Type B backfill may be used as initial and final backfill for all pipes, culverts or drains under concrete pavements. Placement and compaction shall be as specified in Heading (d) below.

(2) Cross Drains Under Flexible Pavements: All reaches, exclusive of those portions of the pipe which are under shoulders, of cross drains and all other culverts, pipes or drains that cross the centerlines of the new roadway or centerlines of existing roadways, such as intersections and are under flexible pavements shall receive an initial backfill of Type A material. Type B backfill materials may be used as final backfill for all pipes. Placement and compaction shall be as specified in Heading (c) and (d) below. Where the subgrade is above existing ground, embankment material as specified for the remainder of the project shall be used from the top of the final backfill to the top of the established embankment grade.

(3) Other Drains Under Flexible Pavements: All reaches of all culverts, pipes or drains under flexible pavements that do not cross the centerlines of new roadway or centerlines of existing roadways, and exclusive of those portions of the pipe which are totally under shoulders, shall receive an initial and final backfill of Type B material. Placement and compaction shall be as specified in Heading (d) below. Where the subgrade is above existing ground, embankment material as specified for the remainder of the project shall be used from the top of the final backfill to the top of the established embankment grade.

(4) Other Areas: All culverts, pipes or drains in nonpaved areas or paved areas that serve as driveways or shoulders shall receive an initial and final backfill of Type B material. Placement and compaction shall be as specified in Heading (d) below.

(5) Pipes Subject to Construction Traffic; The embankment or pipe backfill shall be constructed to a minimum of 24 inches (600 mm) over the pipe before heavy construction equipment is allowed to cross the installation. Where practical, installations with less than 24 inches (600 mm) of cover over the top of the pipe shall be constructed after heavy hauling is completed over the pipe location. After completion of hauling operations, the contractor shall remove excess cover material. Pipe damaged by hauling and backfilling operations shall be removed and reinstalled, or replaced, at no direct pay.

(c) Placement and Compaction; Type A Backfill: For all pipes, culverts and conduits under paved and nonpaved areas, where Type A backfill material is used, the Type A backfill shall be thoroughly hand compacted under the pipe haunches and then dynamically compacted in layers not exceeding 8 inches (200 mm) compacted thickness. Compaction under the haunches of the pipe shall initially be by hand tamping or other acceptable means, until a level is reached that the dynamic tamping can commence. Each lift shall be compacted by applying at least eight

ELECTRONIC COPY -- NOT FOR BID SUBMITTAL

passes of a hand operated, dynamic mechanical compaction device over the surface of each lift. With approval of the engineer, layer thickness may be increased to 12 inches (300 mm) with verification of satisfactory installation and performance. If flowable fill is used it shall be furnished, placed and consolidated in accordance with Section 710. The contractor shall control placement operations during initial backfill operations so as not to damage protective coatings on metal pipes. The contractor shall repair damaged coatings at no additional pay.

(d) Placement and Compaction; Type B Backfill: For all pipes, culverts and conduits, where Type B backfill is allowed, the Type B material shall be placed in layers not exceeding 8 inches (200 mm) compacted thickness. Compaction shall be with suitable mechanical equipment. With approval of the engineer, layer thickness may be increased to 12 inches (300 mm) with verification of satisfactory installation and performance.

(e) Placement and Compaction; Trenchless or Partial Trench Condition: All pipes, culverts, drains and conduits placed with any portion of the pipe above existing ground must also comply with Subsections (a),(b) (c) and (d) above for the portion of the pipe within a trench and that portion of the pipe not constructed in a trench. The width of initial and final backfill of that portion above existing ground and not within a trench will be constructed to such a width that the requirements for placement, compaction and density are met.

(f) Density Requirements: The in place density of Type A backfill materials and bedding materials, will not be measured or determined. Type A backfill, exclusive of RAP and flowable fill, shall be placed at or near optimum moisture content determined in accordance with DOTD TR 415 or 418. RAP materials shall be placed and compacted in a slightly moist condition.

The maximum dry density of initial or final Type B backfill under all paved areas which are to be under traffic will be determined in accordance with DOTD TR 415 or TR 418 and in-place density determined in accordance with DOTD TR 401. Initial and final Type B backfill under all paved areas, under traffic, shall be placed at or near optimum moisture content determined in accordance with DOTD TR 415 or TR 418. Each layer shall be compacted by approved methods prior to the placement of a subsequent layer. The engineer will approve the compaction method based upon validation that such method, including moisture control, will achieve at least 95 percent of maximum dry density as determined in accordance with DOTD TR 401. With approval of the engineer, density testing may be waived on subsequent layers with backfill installation in accordance with approved compaction methods and continued satisfactory performance.

Initial and final backfill in unpaved areas or paved areas such as shoulders or driveways, shall be placed evenly and compacted along the length of the culvert, pipe or drain from the top of the initial backfill to the top of the subgrade. Layered backfill shall be compacted at least to the density of the adjoining existing soils or the compaction required of the laterally adjoining layers of soil immediately outside the trench for embankment elevations. Initial and final backfill shall be placed and compacted at or near optimum moisture content determined in accordance with DOTD TR 415 or TR 418.

701.09 INSPECTION OF PIPES. After completion of embankment and prior to roadway surfacing, the engineer shall inspect pipes for proper alignment and integrity of joints. Any misaligned pipe or defective joints shall be corrected by the contractor at no direct pay.

ELECTRONIC COPY -- NOT FOR BID SUBMITTAL

(a) Plastic Pipe: Installed plastic pipe shall be tested to ensure that vertical deflections do not exceed 5.0 percent. Maximum allowable deflections shall be governed by the mandrel requirements stated herein.

Deflection tests shall be performed no sooner than 30 calendar days after installation and compaction of backfill. The pipe shall be cleaned and inspected for offsets and obstructions prior to testing.

For pipe 36 inches (900 mm) and less in diameter, a mandrel shall be pulled through the pipe by hand to ensure that maximum allowable deflections have not been exceeded. The mandrel shall be approved by the engineer prior to use. Use of an unapproved mandrel or a mandrel altered or modified after approval will invalidate the test. If the mandrel fails to pass, the pipe is overdeflected.

Unless otherwise permitted, overdeflected pipe shall be uncovered and, if not damaged, reinstalled. Damaged pipe shall not be reinstalled, but shall be removed and replaced with new pipe. Any pipe subjected to any method or process other than removal, which attempts, even successfully, to reduce or cure any overdeflection, shall be removed and replaced with new pipe.

The mandrel shall be a rigid, nonadjustable, odd-numbered legged (minimum 9 legs) mandrel having a length not less than its nominal diameter or 24 inches (600 mm), whichever is less. The minimum diameter at any point shall be 5.0 percent less than the base inside diameter of the pipe being tested. The mandrel shall be fabricated of steel, aluminum or other approved material fitted with pulling rings at each end. The nominal pipe size and outside diameter of the mandrel shall be stamped or engraved on some segment other than a runner. A suitable carrying case shall be furnished.

For pipe larger than 36 inches (900 mm) in diameter, deflection shall be determined by a method approved by the engineer. If a mandrel is selected, the minimum diameter, length, and other requirements shall conform to the above requirements.

Mandrel testing shall be conducted by the contractor in the presence of the engineer. Mandrel testing shall be at no direct pay.

(b) Metal Pipe: If the inside diameter of metal pipe or rise dimension of metal pipe arch deflects more than 5.0 percent from original dimensions, they shall be removed and reinstalled, unless they do not rebound or are damaged. Pipe or pipe arch which are damaged or do not rebound shall be removed and replaced at no direct pay. Measurement of deflection will be made by the engineer away from rerolled ends.

701.10 CLEANING PIPES.

(a) Existing Pipes: Pipes designated to be cleaned shall be cleaned of soil, debris and other materials to the invert of the pipe. Designated pipes shall be cleaned by approved methods that will not damage the pipes. Any damage caused by the contractor's operations shall be satisfactorily repaired at no direct pay.

Removed soil, debris and other materials shall be disposed of in accordance with Subsection 202.02 or as otherwise approved in writing.

(b) Contractor Installed Pipes: Prior to final acceptance, pipes shall be cleaned of all debris and soil to the invert of the pipe at no direct pay.

ELECTRONIC COPY -- NOT FOR BID SUBMITTAL

Removed soil, debris and other materials shall be disposed of in accordance with Subsection 202.02 or as otherwise approved in writing.

701.11 STUBBING AND PLUGGING PIPES. When it is required that pipes be plugged, such plugs shall be constructed of Class R concrete complying with Section 901. Thickness of plug and method of construction shall be as directed.

When new pipes are to be stubbed into new or existing pipes or other structures, the connection shall be made with approved mortar complying with Subsection 702.02.

701.12 MEASUREMENT. Pipe, both new and relaid, will be measured in linear feet (lin m) as follows unless stated otherwise.

(a) Pipe not confined by fixed structures will be measured by the number of joints at the nominal length of each joint.

(b) Pipe confined by fixed structures will be measured along the pipe between the termini of pipe in structure walls.

(c) Pipe confined by a fixed structure on one end and unconfined at the other end will be measured along the pipe from the terminus of pipe in the structure wall to the unconfined end of pipe.

(d) Fabricating of pipe tees, elbows and other fittings will be measured per each fitting. The length of pipe in such fittings will be included in the pay length measurement of pipes of which they form a part.

(e) Excavation required for installation of pipes will not be measured for payment, except as otherwise specified in Subsection 203.14.

(f) Furnishing and placing backfill material below existing ground level for pipes will not be measured for payment. Backfill material needed to complete backfill above natural ground and around pipes that extend above natural ground will be measured and payment will be made under applicable earthwork items. When specified, flowable fill will be measured and paid for in accordance with Section 710.

(g) Plugging and stubbing of pipes will not be measured for payment.

(h) Cleaning existing pipes will be measured by the length of pipe cleaned and accepted.

(i) Concrete collars will be measured per each.

701.13 PAYMENT.

(a) Payment for pipe will be made at the contract unit price per linear foot (lin m) of the types and sizes specified.

When plastic pipe is specified on the plans or elected to be used by the contractor, payment will be made at the contract unit price per linear foot (lin m) of the types and sizes specified in accordance with the payment schedule of Table 701-1.

ELECTRONIC COPY -- NOT FOR BID SUBMITTAL

Table 701-1
Payment Schedule for Plastic Pipe

Percent Payment	Stage of Completeness
75	After placement and backfill has been completed
25	After the pipe has met vertical deflection requirements in accordance with Subsection 701.09(a)

(b) Payment for fabricating pipe tees, elbows and other fittings will be made at the contract unit price per each fitting.

(c) When unstable conditions are encountered, the additional excavation will not be measured for payment; however, the additional materials furnished and placed for the pipe foundation will be measured and paid for as follows:

(1) Granular Materials: Payment will be made under the embankment item. The net section volume of the materials will be multiplied by 3 to determine the pay volume. When the contract does not include a pay item for embankment, payment will be made in accordance with Subsection 104.02.

(2) Bedding Material: Measurement and payment will be made in accordance with Section 726. When the contract does not include a pay item for bedding material, payment will be made in accordance with Subsection 104.02.

(d) Payment for cleaning existing pipes will be made at the contract unit price per linear foot (lin m).

(e) Payment for concrete collars will be made at the contract unit price per each.

Payment will be made under:

Item No.	Pay Item	Pay Unit
701-01	Cross Drain Pipe (Size & Type)	Linear Foot (Lin m)
701-02	Cross Drain Pipe Arch (Size & Type)	Linear Foot (Lin m)
701-03	Storm Drain Pipe (Size & Type)	Linear Foot (Lin m)
701-04	Storm Drain Pipe Arch (Size & Type)	Linear Foot (Lin m)
701-05	Side Drain Pipe (Size)	Linear Foot (Lin m)
701-06	Side Drain Pipe Arch (Size)	Linear Foot (Lin m)
701-07	Yard Drain Pipe (Size)	Linear Foot (Lin m)
701-08	Relaying Pipe	Linear Foot (Lin m)
701-09	Fabricating Pipe Fittings	Each
701-10	Reinforced Concrete Pipe (Extension)	Linear Foot (Lin m)
701-11	Reinforced Concrete Pipe Arch (Extension)	Linear Foot (Lin m)
701-12	Corrugated Metal Pipe (Extension)	Linear Foot (Lin m)
701-13	Corrugated Metal Pipe Arch (Extension)	Linear Foot (Lin m)

ELECTRONIC COPY -- NOT FOR BID SUBMITTAL

701-14	Cleaning Existing Pipes	Linear Foot (Lin m)
701-15	Concrete Collar	Each
701-16	Plastic Pipe (Extension)	Linear Foot (Lin m)

SECTION 704 – GUARD RAIL:
Subsection 704.03 – General Construction Requirements (01/05), Pages 368 and 369.

Add the following to Heading (d), Guard Rail End Treatments.

All end treatments shall bear a label indicating the manufacturer and exact product name of the end treatment along with its assigned NCHRP 350 test level. This label shall resist weathering and shall be permanently affixed to the railing in such a way as to be readily visible.

SECTION 706 – CONCRETE WALKS, DRIVES AND INCIDENTAL PAVING:
All Subsections within Section 706 (04/08), Pages 375 – 377.

Delete Section 706, Concrete Walks, Drives and Incidental Paving and substitute the following.

SECTION 706
CONCRETE WALKS, DRIVES AND INCIDENTAL PAVING

706.01 DESCRIPTION. This work consists of furnishing and constructing portland cement concrete walks, handicapped curb ramps, drives and incidental paving slabs in accordance with these specifications and in conformity with lines, grades and dimensions shown on the plans or established.

706.02 MATERIALS. Materials shall comply with the following Section or Subsections.

Portland Cement Concrete (Class M)	901
Joint Filler	1005.01(c)
Reinforcing Steel	1009.01
Curing Materials	1011.01

706.03 CONSTRUCTION REQUIREMENTS.

(a) Excavation: Excavation shall be made to required depth and width. The top of the subgrade shall be shaped and compacted to a firm, even surface conforming to the section shown on the plans. Unsuitable material shall be removed and disposed of in accordance with Subsection 202.02 and replaced with approved material at no direct pay.

(b) Forms: Forms shall be of wood or metal and shall extend the full depth of concrete. Forms shall be straight, clean and of sufficient strength to resist the pressure of concrete. Bracing of forms shall be such that forms remain in horizontal and vertical alignment until their removal.

Concrete may be placed by slip-form methods. Slip-formed concrete shall be placed with an approved machine designed to spread, vibrate, consolidate and finish concrete in one pass of the machine in such manner that minimum hand finishing is necessary. Sliding forms shall be

ELECTRONIC COPY -- NOT FOR BID SUBMITTAL

rigidly held together to prevent spreading of forms. After the passing of the side forms there shall be no noticeable slumping of concrete.

(c) Subgrade: The subgrade shall be thoroughly moistened immediately prior to placing concrete.

(d) Placing and Finishing: Concrete shall be placed on the subgrade, struck off to required thickness and tamped sufficiently to bring the mortar to the surface. The surface shall be finished with a wood float or steel trowel followed by brushing to a slightly rough finish. Joints and edges shall be rounded with an edging tool having a 1/4-inch (6 mm) radius.

(e) Joints:

(1) Expansion Joints: Expansion joints shall be filled with 1/2 inch (13 mm) thick preformed expansion joint filler. Expansion joints shall be installed at maximum 100-foot (30 m) intervals, and between intersecting paving and any fixed structure such as a building, bridge or curbing, and between intersecting paving and the handicapped curb ramps. Expansion joint material shall extend for the full width and depth of paving.

(2) Weakened Plane: Weakened planes shall be formed by a jointing tool or other acceptable means. Weakened planes shall extend into concrete for at least 1/4 of the depth and shall be approximately 1/8 inch (3 mm) wide.

a. Walks: Spacing of weakened planes for walks shall be equal to the width of walk.

b. Drives: A longitudinal weakened plane shall be formed along the centerline of drives more than 16 feet (5 m) wide, and transverse weakened planes shall be formed at not more than 16-foot (5 m) intervals.

c. Incidental Paving: Weakened planes for incidental paving shall be formed at intervals not exceeding 30 times the thickness of the concrete in length or width. Incidental paving poured adjacent to jointed concrete shall be jointed to match existing joints, with intermediate joints formed as necessary not to exceed the maximum joint spacing.

(3) Construction Joints: Construction joints shall be formed around manholes, utility poles, etc., extending into paving and 1/4 inch (6 mm) thick preformed expansion joint filler shall be installed in these joints.

(4) Tie-ins: Tie-ins of existing concrete shall be made by full depth sawing at no direct pay.

(f) Curing: Concrete shall be cured in accordance with Subsection 601.10.

(g) Detectable Warning Surface for Handicap Ramps and At-Grade Sidewalk Intersections: Sidewalks, when intersecting with roadways, shall be equipped with a detectable warning surface system consisting of raised truncated domes as a transition between the sidewalk and the street as required by the Americans with Disabilities Act, 28 CFR Part 36, ADA Standards for Accessible Design.

Detectable warnings (truncated domes) shall be installed on the ramp surface over the full width of the ramp throat for a distance of 24 inches (600 mm) in the direction of travel from the back of the curb. Detectable warnings (truncated domes) shall also be installed on at-grade sidewalks intersecting with roadways for a distance of 36 inches (900 mm) in the direction of travel from the end of the sidewalk. Truncated domes shall be laid out on a square grid in order to allow enough space for wheelchairs to roll between the domes.

ELECTRONIC COPY -- NOT FOR BID SUBMITTAL

Light reflectance of the truncated domes and the underlying surface must meet the 70 percent contrast requirement of ADAAG.

706.04 MEASUREMENT. Quantities of concrete walks, drives and incidental paving slabs for payment will be the design quantities as specified on the plans and adjustments thereto. Design quantities will be adjusted if the engineer makes changes to adjust to field conditions, if design errors are proven or if design changes are made. Design areas are based on the horizontal dimensions shown on the plans. Excavation, backfill, reinforcing steel and joint materials will not be measured for payment.

Handicapped curb ramps, including the detectable surface warning system, will be measured per each.

Detectable surface warning systems for at-grade sidewalk intersection will not be measured for payment.

706.05 PAYMENT. Payment for concrete walks, drives and incidental paving will be made on a lot basis at the contract unit price per square yard (sq m), adjusted in accordance with the following provisions. Payment for each lot will be made in accordance with Table 901-6. Size, sampling, and testing of each concrete lot shall be in accordance with the Materials Sampling Manual.

Payment for handicapped curb ramps, including the detectable surface warning system, will be made by each and shall include, but not limited to, curb transitions, detectable warning system, gutter, landing and base.

Payment will be made under:

Item No.	Pay Item	Pay Unit
706-01	Concrete Walk (inch (mm) Thick)	Square Yard (Sq m)
706-02	Concrete Drive (inch (mm) Thick)	Square Yard (Sq m)
706-03	Incidental Concrete Paving (inch (mm) Thick	Square Yard (Sq m)
706-04	Handicapped Curb Ramps	Each

SECTION 713 – TEMPORARY TRAFFIC CONTROL:

Subsection 713.06 – Pavement Markings (08/06), Pages 400 – 403.

Delete Table 713-1, Temporary Pavement Markings and substitute the following.

ELECTRONIC COPY -- NOT FOR BID SUBMITTAL

Table 713-1
Temporary Pavement Markings[1,2]

		Two-lane Highways	Undivided Multilane Highways	Divided Multilane Highways
SHORT TERM	ADT<1500; or ADT>1500 and time<3 days	Lane lines 4-foot (1.2 m) tape on 40-foot (12 m) centers; with "Do Not Pass" and "Pass With Care" signs as required		
	ADT>1500; Time>3 days and<2 weeks	Lane lines 4-foot (1.2-m) tape on 40-foot (12-m) centers with no passing zone markings		
	All ADT's with time <2 weeks		Lane lines 4-foot (1.2m) tape on 40-foot (12 m) centers; double yellow centerline	Lane lines 4-foot (1.2 m) tape on 40-foot (12 m) centers
LONG TERM	All ADT's with time >2 weeks	Standard lane lines, no-passing zone markings, legends and symbols and when pavement width is 22 feet (6.7 m) or greater, edge lines	Standard lane lines, centerlines, edge lines, and legends and symbols	Standard lane lines, centerlines, edge lines, and legends and symbols.

[1]No-passing zones shall be delineated as indicated whenever a project is open to traffic.
[2]On all Asphaltic Surface Treatments that are open to traffic and used as a final wearing course or as an interlayer, temporary pavement markings (tabs) on 20-foot (6 m) centers shall be used, in lieu of the 4-foot (1.2 m) tape, on 40-foot (12 m) centers.

SECTION 729 – TRAFFIC SIGNS AND DEVICES:

ELECTRONIC COPY -- NOT FOR BID SUBMITTAL

Subsection 729.02 – Materials (04/08), Pages 456 and 457.

Delete the contents of Heading (a), Sign and Marker Sheeting, and substitute the following.

(a) Sign and Marker Sheeting: Sheeting material for sign panels, delineators, barricades and other markers shall comply with Section 1015. All permanent signs shall meet the requirements of ASTM D 4956, Type X.

ELECTRONIC COPY -- NOT FOR BID SUBMITTAL

Subsection 729.04, Fabrication of Sign Panels and Markers (04/08), Pages 458 – 460.

Delete the third paragraph of Heading (c), Sheeting Application and substitute the following.

ASTM D 4956 Type X reflective sheeting shall be applied with an orientation determined by the engineer to obtain the optimum entrance angle performance. Fabricated vertical splices in ASTM D 4956 Type X reflective sheeting will be allowed only when the horizontal dimension of the sign face or attached shield is in excess of the maximum manufactured width of the sheeting. Fabricated vertical splices in ASTM D 4956 Type X reflective sheeting will also be allowed when the specified orientation will create excessive sheeting waste.

SECTION 804 – DRIVEN PILES:

Subsection 804.08 – Construction Requirements (04/07), Pages548 – 554.

Delete the first sentence of Heading (a), Preboring and substitute the following.

Preboring by augering, wet-rotary drilling, or other methods used to facilitate pile driving will not be permitted unless specified in the plans or allowed by the engineer.

Delete the first sentence of Heading (b), Jetting and substitute the following.

Jetting will not be permitted unless allowed in the plans or allowed by the engineer.

SECTION 901 – PORTLAND CEMENT CONCRETE:

Subsection 901.06 – Quality Control of Concrete (08/06), Pages 726 – 731.

Add the following to the contents of Heading (b), Quality Control Tests.

The contractor shall be responsible for monitoring the components (cement, mineral and chemical admixtures, aggregates) in their mix to protect against any changes due to component variations. As component shipments arrive, the contractor shall verify slump, air content and set time by testing at ambient temperatures. The contractor shall make adjustments to the mix design to rectify any changes which would adversely affect constructability, concrete placement or the specifications. The contractor shall submit test results to the Department for review each day of paving. Testing to validate component consistency will be documented on the control logs. Conformance or variation in mix parameters (workability, set times, air content, etc.) shall be noted on the control logs. The contractor shall provide a copy of the proposed testing plan to the engineer for record. Acceptance of the plan does not relieve the contractor's responsibility for consistency.

Subsection 901.08 – Composition of Concrete (12/05), Pages 732 – 734.

Add the following to Heading (a).

The blended cement containing up to 50 percent of grade 100 or grade 120 ground granulated blast-furnace slag must be in compliance with Subsection 1001.04 for portland blast-furnace slag cement.

ELECTRONIC COPY -- NOT FOR BID SUBMITTAL

SECTION 1001 – HYDRAULIC CEMENT:

Subsection 1001.01 – Portland Cement (09/07). Page 749.

Delete the contents of this subsection and substitute the following.

1001.01 PORTLAND CEMENT. Portland cement shall be from an approved source listed in QPL 7 and shall comply with AASHTO M 85.

Alkali content calculated as sodium oxide equivalent shall not exceed 0.60 percent by weight for all types of cement.

SECTION 1003 – AGGREGATES:

Subsection 1003.02 – Aggregates for Portland Cement Concrete and Mortar (07/07), Pages 763 – 766.

Delete the contents of Heading (c), Aggregates for Types B and D Pavements, and substitute the following.

(c) Aggregates for Types B and D Pavements: For the combined aggregates for the proposed portland cement concrete pavement mix, the percent retained based on the dry weight (mass) of the total aggregates shall meet the requirements of Table 1003-1A for the type of pavement specified in the plans. Additionally, the sum of the percents retained on any two adjacent sieves so designated in the table shall be at least 12 percent of the total combined aggregates. The maximum amounts by weight (mass) of deleterious materials for the total aggregate shall be the same as shown in Subsection 1003.02(b).

ELECTRONIC COPY -- NOT FOR BID SUBMITTAL

Table 1003-1A
Aggregates for Types B and D Pavements

U.S. Sieve	Metric Sieve	Percent Retained of Total Combined Aggregates	
		Pavement Type	
		Type B	Type D
2 1/2 inch	63 mm	0	0
2 inch	50 mm	0	0-20
1 1/2 inch	37.5 mm	0-20	0-20
1 inch	25.0 mm	0-20	5-20
3/4 inch	19.0 mm	5-20	5-20
1/2 inch	12.5 mm	5-20	5-20
3/8 inch	9.5 mm	5-20	5-20
No. 4	4.75 mm	5-20	5-20
No. 8	2.36 mm	5-20	5-20
No. 16	1.18 mm	5-20	5-20
No. 30	600 µm	5-20	5-20
No. 50	300 µm	0-20	0-20
No. 100	150 µm	0-20	0-20
No. 200	75 µm	0-5	0-5
Note: For the sieves in the shaded areas, the sum of any two adjacent sieves shall be a minimum of 12 percent of the total combined aggregates.			

Each type of aggregate to be used in the proposed mixture shall be sampled and tested individually. The percent of total combined aggregates retained shall be determined mathematically based on the proportions of the combined aggregate blend. All gradation calculations shall be based on percent of dry weight (mass).

SECTION 1005 – JOINT MATERIALS FOR PAVEMENTS AND STRUCTURES:
Subsection 1005.04 – Combination Joint Former/Sealer (11/05), Pages 782 and 783.

Delete Heading (a) and substitute the following.

(a) Description: This joint former/sealer is intended for use in simultaneously forming and sealing a weakened plane in portland cement concrete pavements.

The material shall consist of an elastomeric strip permanently bonded either mechanically or chemically at the top of each of two rigid plastic side frames and covered with a removable plastic top cap. Side frames shall be of such configuration that when the sealer is inserted into plastic concrete and vibrated, a permanent bond forms between side frames and concrete.

Delete Heading (b)(1) and substitute the following.

(1) Elastomer: The elastomer strip portion of the material shall be manufactured from vulcanized elastomeric compound using polymerized chloroprene or thermoplastic vulcanizate as the base polymer, and shall comply with the following requirements:

ELECTRONIC COPY -- NOT FOR BID SUBMITTAL

Property	ASTM Test Method	Requirements	
		Polymerized Chloroprene	Thermoplastic Vulcanizate
Tensile Strength, kPa, Min.	D 412	12,400	7,400
Elongation at Break, % Min.	D 412	200	400
Hardness, Shore A	D 2240	65 ± 10	65 ± 10
Properties after Aging, 70 h @ 100°C	D 573		
Tensile Strength, % Loss, Max.		20	20
Elongation, % loss, Max.		25	25
Hardness, pts. increase, Max.		10	10
Ozone Resistance, 20% strain or bentloop, 300 pphm in air, 70 h @ 40°C	D 1149	no cracks	no cracks
Oil Swell, IRM 903, 70 h @ 100°C, wt change, % Max.	D 471	45	75

Delete Headings (b)(2) and (b)(3) and substitute the following:

(2) Bond of Elastomer to Plastic: The force required to shear the elastomer from the plastic shall be a minimum of 5.0 pounds per linear inch (90 g/mm) of sealer when tested in accordance with DOTD TR 636.

(3) Bond of Plastic to Cement Mortar: This bond will be evaluated and shall meet the following requirements:

The force required to separate the cement mortar from the plastic shall be a minimum of 5.0 pounds per linear inch (90 g/mm) of sealer when tested in accordance with DOTD TR 636.

SECTION 1006 – CONCRETE AND PLASTIC PIPE:

Subsection 1006.09 – Plastic Yard Drain Pipe (06/07), Page 789.

Delete the contents of Subheading (a)(3), Ribbed Polyvinyl Chloride Pipe (RPVCP) and substitute the following.

Ribbed Polyvinyl Chloride Pipe (RPVCP): Ribbed Polyvinyl Chloride Pipe shall comply with ASTM F 794, Series 46 or ASTM F 949 (46 psi).

SECTION 1013 – METALS:

Subsection 1013.09 – Steel Piles (08/06) Page 822.

Delete the title and references to "Steel Piles" in this subsection and substitute "Steel H Piles".

SECTION 1015 – SIGNS AND PAVEMENT MARKINGS:

Subsection 1015.04 – Sign Panels (05/07), Pages 832 and 833.

Delete the contents of Heading (a), Permanent Sign Panels and substitute the following.

ELECTRONIC COPY -- NOT FOR BID SUBMITTAL

(a) Permanent Sign Panels: Flat panels shall be aluminum sheets or plates complying with ASTM B 209, Alloy 6061-T6 or Alloy 5052-H38. Extruded aluminum panels shall comply with ASTM B 221 (ASTM B 221M), Alloy 6063-T6 and after fabrication, have a flatness equal to or less than 0.031 inch per foot of length and 0.004 inch per inch of width.

Subsection 1015.05 - Reflective Sheeting (04/08), Pages 833 – 838.

Delete the contents of this subsection and substitute the following.

1015.05 REFLECTIVE SHEETING.

(a) Permanent and Temporary Standard Sheeting: Reflective sheeting shall be one of the following standard types as specified on the plans and complying with ASTM D 4956 except as modified herein. Permanent warning, regulatory, guide and supplemental guide sign sheeting shall meet the requirements of ASTM D 4956 Type X. Reflective sheeting for temporary signs and devices shall meet the requirements of ASTM D 4956 Type III except as noted in Subsection 1015.05(f). Reflective sheeting shall be an approved product listed in QPL 13.

Type III - A high-intensity retroreflective sheeting that is typically encapsulated glass-bead retroreflective material.

Type VI - An elastomeric high-intensity retroreflective sheeting without adhesive. This sheeting is typically a vinyl microprismatic retroreflective material.

Type X - A super high-intensity retroreflective sheeting having highest retroreflectivity characteristics at medium distances. This sheeting is typically an unmetalized microprismatic retroreflective element material.

(b) Fluorescent Pink Retroreflective Sheeting: Signs for temporary control of traffic through incident management areas shall be Type VI fluorescent pink retroreflective sheeting and shall comply with the MUTCD. Temporary traffic control signs for incident management shall be placed to notify motorists of upcoming incidents on the roadway, and shall be removed from public view once the incident has been managed. Physical properties shall comply with ASTM D 4956. Photometric properties shall be as follows.

(1) Retroreflectivity: Minimum Coefficients of Retroreflection shall be as specified in Table 1015-1.

ELECTRONIC COPY -- NOT FOR BID SUBMITTAL

Table 1015-1
Coefficients of Retroreflection for Fluorescent Pink Sheeting[1]

Observation Angle, degrees	Entrance Angle, degrees	Fluorescent Pink
0.2	-4	100
0.2	+30	40
0.5	-4	40
0.5	+30	15

[1]Minimum Coefficient of Retroreflection (R_A) (cd $lx^{-1}m^{-2}$)

(2) Color and Daytime Luminance: Color Chromaticity Coordinates and Daytime Luminance Factors shall be as specified in Table 1015-2.

Table 1015-2
Fluorescent Pink Color Specifications Limits (Daytime)

Chromaticity Coordinates (corner points) [1]								Luminance Factor, min.
1		2		3		4		Y%
x	y	x	y	x	y	x	y	25
0.450	0.270	0.590	0.350	0.644	0.290	0.536	0.230	

[1]The four pairs of chromaticity coordinates measured with CIE 2° Standard Observer and 45/0 (0/45) geometry and CIE D65 Standard Illuminant.

(c) Adhesive Classes: The adhesive required for retroreflective sheeting shall be Class 1 (pressure sensitive) as specified in ASTM D 4956.

(d) Accelerated Weathering: Reflective sheeting, when processed, applied and cleaned in accordance with the manufacturer's recommendations shall perform in accordance with the accelerated weathering standards in Table 1015-3.

ELECTRONIC COPY -- NOT FOR BID SUBMITTAL

Table 1015-3
Accelerated Weathering Standards[1]

Type	Retroreflectivity[2]				Colorfastness[3]	
	Orange/ Fluorescent Orange		All colors, except orange/Fluorescent Orange		Orange/ Fluorescent Orange	All colors, except orange/Fluorescent Orange
III	1 year	80[4]	3 years	80[4]	1 year	3 years
III (for drums)	1 year	80[4]	1 year	80[4]	1 year	1 year
VI	1/2 year	50[5]	1/2 year	50[5]	1/2 year	1/2 year
X	1 year	80[6]	3 years	80[6]	1 year	3 years

[1]At an angle of 45° from the horizontal and facing south in accordance with ASTM G 7 at an approved test facility in Louisiana or South Florida.
[2]Percent retained retroreflectivity of referenced table after the outdoor test exposure time specified.
[3]Colors shall conform to the color specification limits of ASTM D 4956 after the outdoor test exposure time specified.
[4]ASTM D 4956, Table 8.
[5]ASTM D 4956, Table 13.
[6]ASTM D 4956, Table 4.

(e) Expected Sign Life Data and Performance: The sheeting manufacturer shall supply expected retroreflectivity service life curves for each of the following sign sheeting colors: white, green, blue, brown, red, and yellow. The service life curves shall be plots of the 95 percent expected life plotted on an x-y graph with life years on the x-axis and retroreflectivity on the y-axis. The expected life shall account for worst case installations, equivalent to an installation in South Louisiana with the sign facing to the South. The sheeting manufacturer shall also supply a table of expected life values taken from the service life curves for Revision Number 2 to the 2003 Edition of the MUTCD minimum reflectivity requirements published in the Federal Register on December 21, 2007. Reflective sheeting for signs, when processed, applied and cleaned in accordance with the manufacturer's recommendations shall perform outdoors in accordance with the performance standards in Table 1015-4.

ELECTRONIC COPY -- NOT FOR BID SUBMITTAL

Table 1015-4
Reflective Sheeting Performance Standards

Type	Retroreflectivity[1] -- Durability[2]				Colorfastness[3]
	Orange/ Fluorescent Orange		All colors, except orange/Fluorescent Orange		
III	3 years	80[4]	10 years	80[4]	3 years
X	3 years	80[5]	7years	80[5]	3 years

[1]Percent retained retroreflectivity of referenced table after installation and the field exposure time specified.
[2]All sheeting shall maintain its structural integrity, adhesion and functionality after installation and the field exposure time specified.
[3]All colors shall conform to the color specification limits of ASTM D 4956 after installation and the field exposure time specified.
[4]ASTM D4956, Table 8.
[5]ASTM D 4956, Table 4.

(f) Temporary Signs, Barricades, Channelizing Devices, Drums and Cones: Reflective sheeting for temporary signs, barricades and channelizing devices, shall meet the requirements of ASTM D 4956, Type III except that temporary warning construction signs used on the mainline of freeways and expressways shall be fluorescent orange and meet the requirements of ASTM D 4956, Type X.

Reflective sheeting for vertical panels shall meet the requirements of ASTM D 4956, Type III.

Reflective sheeting for drums shall be a minimum of 6 inches (150 mm) wide and shall meet the requirements of ASTM D 4956, Type III, and the Supplementary Requirement S2 for Reboundable Sheeting as specified in ASTM D 4956. Reflective sheeting for traffic cone collars shall meet the requirements of ASTM D 4956, Type III or Type VI.

(g) Sheeting Guaranty. The contractor shall provide the Department with a guaranty from the sheeting manufacturer stating that if the retroreflective sheeting fails to comply with the performance requirements of this subsection, the sheeting manufacturer shall do the following:

ELECTRONIC COPY -- NOT FOR BID SUBMITTAL

Table 1015-5
Manufacturer's Guaranty-Reflective Sheeting

Type	Manufacturer shall restore the sign face in its field location to its original effectiveness at no cost to the Department if failure occurs during the time period[1] as specified below		Manufacturer shall replace the sheeting required to restore the sign face to its original effectiveness at no cost to the Department if failure occurs during the time period[1] as specified below
	Orange/Fluorescent Orange	All colors, except orange/Fluorescent Orange	All colors, except orange/Fluorescent Orange
III	<3 years	<7 years	7-10 years
X	<3 years	<5 years	5-7 years

[1] From the date of sign installation.

Replacement sheeting for sign faces, material, and labor shall carry the unexpired guaranty of the sheeting for which it replaces.

The sign fabricator shall be responsible for dating all signs with the month and year of fabrication at the time of sign fabrication. This date shall constitute the start of the guaranty obligation period.

Subsection 1015.11 - Preformed Plastic Pavement Marking Tape (06/07), Pages 842 – 844.

Delete the contents of this subsection and substitute the following.

1015.11 PREFORMED PLASTIC PAVEMENT MARKING TAPE.

(a) General: Preformed plastic pavement marking tape shall be approved products listed on QPL 64 and shall comply with ASTM D4505 Retroreflectivity Level I or Level II, or DOTD Intersection Grade (as specified below), except as modified herein. The marking tape shall be Class 2 or 3. The type and color shall be in accordance with the plans and the MUTCD.

(b) Thickness: All preformed plastic pavement marking tape shall have a minimum overall thickness of 0.060 inches (1.5 mm) when tested without the adhesive.

(c) Friction Resistance: The surface of the Retroreflectivity Level II preformed plastic pavement marking tape shall provide a minimum frictional resistance value of 35 British Polish Number (BPN) when tested according to ASTM E303. The surface of the Retroreflectivity Level I and DOTD Intersection Grade preformed plastic pavement marking tape shall provide a minimum frictional resistance value of 45 BPN when tested according to ASTM E303. Values for the Retroreflectivity Level I material with a raised surface pattern as defined in ASTM D4505 are calculated by averaging values taken at downweb and at a 45 degrees angle from downweb.

ELECTRONIC COPY -- NOT FOR BID SUBMITTAL

(d) Retroreflective Requirements: The preformed plastic pavement marking tape shall have the minimum initial specific luminance values shown in Table 1015-7 when measured in accordance with ASTM D 4061.

Table 1015-7
Specific Luminance of Preformed Plastic Tape

Type	Observation Angle, degrees	Entrance Angle, degrees	Specific Luminance (mcd/sq m/lx)	
			White	Yellow
Retroreflectivity Level I	1.05	88.76	500	300
DOTD Intersection Grade	1.05	88.76	375	250
Retroreflectivity Level II	1.05	88.76	250	175

(e) Durability Requirements: The DOTD Intersection Grade preformed plastic pavement marking tape shall show no appreciable fading, lifting or shrinkage for a least 12 months after placement when placed in accordance with the manufacturer's recommended procedures on pavement surfaces having a daily traffic count not to exceed 15,000 ADT per lane.

The Retroreflectivity Level I preformed plastic pavement marking tape shall show no appreciable fading, lifting or shrinkage for a least 4 years after placement for longitudinal lines and at least 2 years after placement for symbols and legends.

The Retroreflectivity Level I preformed plastic pavement marking tape shall also retain the following reflectance values for the time period detailed in Table 1015-8.

Table 1015-8
Retained Specific Luminance for Retroreflectivity Level I
Preformed Plastic Pavement Marking Tape

Time	Observation Angle, degrees	Entrance Angle, degrees	Specific Luminance (mcd/sq m/lx)	
			White	Yellow
1 year	1.05	88.76	400	240
4 years (2 years for symbols and legend)	1.05	88.76	100	100

(f) Plastic Pavement Marking Tape Guaranty (DOTD Intersection Grade and Retroreflectivity Level I): If the plastic pavement marking tape fails to comply with the performance and durability requirements of this subsection within 12 months for DOTD Intersection Grade and 4 years for Retroreflectivity Level I, the manufacturer shall replace the plastic pavement marking material at no cost to the Department.

SECTION 1020 – TRAFFIC SIGNALS:

Subsection 1020.01 – Traffic Signal Heads (06/07), Pages 873 – 884.

Delete the contents of Heading (a), General Requirements and substitute the following.

ELECTRONIC COPY -- NOT FOR BID SUBMITTAL

(a) General Requirements: Traffic signal sections, beacon sections and pedestrian signal sections shall be of the adjustable type. Materials and construction of each section shall be the same.

Signals shall be constructed for either 8 or 12-inch (200 mm or 300 mm) lens in accordance with the plans. Signal sections shall have three to five sections per face and beacon sections have only one section per face. Signal sections and associated brackets shall be finished inside and out with two coats of high grade dark olive green enamel, color number 14056 according to Federal Standard No. 595b with each coat independently baked. Visors shall be coated green on the outside and black on the inside. Edges shall be deburred and smooth with no sharp edges.

Subsection 1020.04 – Poles for Traffic Signal Systems (06/07), Pages 890 – 894.

Delete the sixth paragraph of Heading (a), Pedestal Support Signal Poles, and substitute the following.

Pedestals shall be finished with at least one coat of rustproofing primer, applied to a clean surface and one coat of dark olive green enamel, color number 14056 according to Federal Standard No. 595b.

ELECTRONIC COPY -- NOT FOR BID SUBMITTAL

LOUISIANA
DEPARTMENT OF TRANSPORTATION AND DEVELOPMENT
SUPPLEMENTAL SPECIFICATIONS

FEMALE AND MINORITY PARTICIPATION IN CONSTRUCTION

The following notice shall be included in, and shall be a part of, all solicitations for offers and bids on all federal and federally assisted construction contracts or subcontracts in excess of $10,000 to be performed in geographical areas designated by the director of OFCCP. Execution of the contract by the successful bidder and any subsequent subcontracts will be considered the contractor's and subcontractor's commitment to the EEO provisions contained in this notice.

NOTICE OF REQUIREMENT FOR AFFIRMATIVE ACTION TO ENSURE EQUAL EMPLOYMENT OPPORTUNITY (EXECUTIVE ORDER 11246)

1. The Offeror's or Bidder's attention is called to the "Equal Opportunity Clause" and the "Standard Federal Equal Employment Opportunity Construction Contract Specifications" set forth herein.

2. The goals for minority and female participation, expressed in percentage terms for the contractor's aggregate workforce in each trade on all construction work in the covered area, are as follows:

AREA	PARISH OR COUNTY	GOAL (%)
	FEMALE PARTICIPATION	
-	All Covered Areas	6.9
	MINORITY PARTICIPATION (UNDER NEW ORLEANS PLAN)	
-	* See Note Below	20 to 23
	MINORITY PARTICIPATION (NOT UNDER NEW ORLEANS PLAN)	
1	Jefferson LA, Orleans LA, St. Bernard LA, St. Tammany LA	31.0
2	Assumption LA, Lafourche LA, Plaquemines LA, St. Charles LA, St. James LA, St. John the Baptist LA, Tangipahoa LA, Terrebonne LA, Washington LA, Forrest MS, Lamar MS, Marion MS, Pearl River MS, Perry MS, Pike MS, Walthall MS	27.7
3	Ascension LA, East Baton Rouge LA, Livingston LA, West Baton Rouge, LA	26.1
4	Concordia LA, East Feliciana LA, Iberville, LA, Pointe Coupee LA, St. Helena LA, West Feliciana LA, Adams MS, Amite MS, Wilkinson, MS	30.4
5	Lafayette LA	20.6
6	Acadia LA, Evangeline LA, Iberia LA, St. Landry LA, St. Martin LA, St. Mary LA, Vermillion LA	24.1
7	Calcasieu LA	19.3
8	Allen LA, Beauregard LA, Cameron LA, Jefferson Davis LA, Vernon LA	17.8
9	Grant LA, Rapides LA	25.7
10	Avoyelles LA, Bienville LA, Bossier LA, Caddo LA, Claiborne LA, DeSoto LA, Natchitoches LA, Red River LA, Sabine LA, Webster LA, Winn LA	29.3
11	Ouachita LA	22.8
12	Caldwell LA, Catahoula LA, East Carroll LA, Franklin LA, Jackson LA, LaSalle LA, Lincoln LA, Madison LA, Morehouse LA, Richland LA, Tensas LA, Union LA, West Carroll LA,	27.9

ELECTRONIC COPY -- NOT FOR BID SUBMITTAL

*These goals apply only to those contractors signatory to the New Orleans Plan and only with respect to those trades which have unions participating in said Plan. The New Orleans Plan Covered Area is as follows: The parishes of Orleans, Jefferson, St. Bernard, St. Tammany, St. Charles, St. John the Baptist, Plaquemines, Washington, Terrebonne, Tangipahoa (that area east of the Illinois Central Railroad), Livingston (that area southeast of the line from a point off the Livingston and Tangipahoa Parish line adjacent from New Orleans and Baton Rouge), St. James (that area southeast of a line drawn from the Town of Gramercy to the point of intersection of St. James, Lafourche and Assumption Parishes), and Lafourche.

These goals are applicable to all the contractor's construction work (whether or not it is federal or federally assisted) performed in the covered area. If the contractor performs construction work in a geographical area located outside of the covered area, it shall apply the goals established for such geographical area where the work is actually performed. With regard to this second area, the contractor is also subject to the goals for both its federally involved and non-federally involved construction.
The contractor's compliance with the Executive Order and the regulations in 41 CFR 60-4 shall be based on its implementation of the Equal Opportunity Clause, specific affirmative action obligations required by the specifications set forth in 41 CFR 60-4.3(a), and its efforts to meet the goals established for the geographical area where the contract resulting from this solicitation is to be performed. The hours of minority and female employment and training must be substantially uniform throughout the length of the contract, and in each trade, and the contractor shall make good faith effort to employ minorities and women evenly on each of its projects. The transfer of minority or female employees or trainees from contractor to contractor, or from project to project, for the purpose of meeting the contractor's goals shall be a violation of the contract, the Executive Order and the regulations in 41 CFR 60-4. Compliance with the goals will be measured against the total work hours performed.

3. The contractor shall provide written notification to the Regional Administrator of the Office of Federal Contract Compliance Programs (555 Griffin Square Building, Dallas, TX 75202) within 10 working days of award of any construction subcontract in excess of $10,000 at any tier for construction work under the contract. The notification shall list the name, address and telephone number of the subcontractor; employer identification number; estimated dollar amount of the subcontract; estimated starting and completion dates of the subcontract; and geographical area in which the contract is to be performed.

4. As used in this Notice and in the contract, the "covered area" is that area shown in the foregoing table in which the project is located.

The following Standard Federal Equal Employment Opportunity Construction Contract Specifications (Executive Order 11246) shall be included in, and shall be a part of, all solicitations for offers and bids on all federal and federally assisted construction contracts or subcontracts in excess of $10,000. Execution of the contract by the successful bidder and any

ELECTRONIC COPY -- NOT FOR BID SUBMITTAL

subsequent subcontracts will be considered the contractor's and subcontractor's commitment to the EEO provisions contained in these Standard Federal Equal Employment Opportunity Construction Contract Specifications (Executive Order 11246).

STANDARD FEDERAL EQUAL EMPLOYMENT OPPORTUNITY CONSTRUCTION CONTRACT SPECIFICATIONS (EXECUTIVE ORDER 11246)

1. As used in these specifications:
   a. "Covered area" means the geographical area described in the solicitation from which this contract resulted;
   b. "Director" means Director, Office of Federal Contract Compliance Programs, United States Department of Labor, or any person to whom the Director delegates authority;
   c. "Employer identification number" means the Federal Social Security number used on the Employer's Quarterly Federal Tax Return, U. S. Treasury Department Form 941.
   d. "Minority" includes:
      (i) Black (all persons having origins in any of the Black African racial groups not of Hispanic origin);
      (ii) Hispanic (all persons of Mexican, Puerto Rican, Cuban, Central or South American or other Spanish Culture or origin, regardless of race);
      (iii) Asian and Pacific Islander (all persons having origins in any of the original peoples of the Far East, Southeast Asia, the Indian Subcontinent, or the Pacific Islands); and
      (iv) American Indian or Alaskan Native (all persons having origins in any of the original peoples of North America and maintaining identifiable tribal affiliations through membership and participation or community identification).

2. If the contractor, or any subcontractor at any tier, subcontracts a portion of the work involving any construction trade, he shall include in each subcontract in excess of $10,000 the provisions of these specifications and the Notice which contains the applicable goals for minority and female participation.

3. If the contractor is participating (pursuant to 41 CFR 60-4.5) in a Hometown Plan approved by the U.S. Department of Labor in the covered area either individually or through an association, its affirmative action obligations on all work in the Plan area (including goals and timetables) shall be in accordance with that Plan for those trades which have unions participating in the Plan. Contractors must be able to demonstrate their participation in and compliance with the provisions of any such Hometown Plan. Each contractor or subcontractor participating in an approved Plan is required to comply with his obligations under the EEO clause, and to make good faith effort to achieve each goal under the Plan in each trade in which it has employees. The overall good faith performance by other contractor or subcontractors toward a goal in an

ELECTRONIC COPY -- NOT FOR BID SUBMITTAL

approved Plan does not excuse any covered contractor's or subcontractor's failure to take good faith efforts to achieve the Plan goals.

4. The contractor shall implement the specific affirmative action standards provided in paragraphs 7a through 7p of these specifications. The goals set forth in the solicitation from which this contract resulted are expressed as percentages of the total hours of employment and training of minority and female utilization the contractor should reasonably be able to achieve in each construction trade in which it has employees in the covered area. Covered construction contractors performing construction work in geographical areas where they do not have a federal or federally assisted construction contract shall apply the minority and female goals established for the geographical area where the work is being performed. Goals are published periodically in the Federal Register in notice form, and such notices may be obtained from any OFCCP office or from federal procurement contracting officers. The contractor is expected to make substantially uniform progress in meeting its goals in each craft during the period specified.

5. Neither the provisions of any collective bargaining agreement, nor the failure by a union with whom the contractor has a collective bargaining agreement, to refer either minorities or women, shall excuse the contractor's obligations under these specifications, Executive Order 11246, or the regulations promulgated pursuant thereto.

6. In order for the nonworking training hours of apprentices and trainees to be counted in meeting the goals, such apprentices and trainees must be employed by the contractor during the training period, and the contractor must have made a commitment to employ the apprentices and trainees at the completion of their training, subject to the availability of employment opportunities. Trainees must be trained pursuant to training programs approved by the U. S. Department of Labor.

7. The contractor shall take specific affirmative actions to ensure equal employment opportunity. The evaluation of the contractor's compliance with these specifications will be based on his effort to achieve maximum results from its actions. The contractor shall document these efforts fully, and shall implement affirmative action steps at least as extensive as the following:

a. Ensure and maintain a working environment free of harassment, intimidation and coercion at all sites, and in all facilities at which the contractor's employees are assigned to work. The contractor, where possible, will assign 2 or more women to each construction project. The contractor shall ensure that all foremen, superintendents and other on-site supervisory personnel are aware of and carry out the contractor's obligation to maintain such a working environment with specific attention to minority or female individuals working at such sites or in such facilities.

b. Establish and maintain a current list of minority and female recruitment sources, provide written notification to minority and female recruitment sources and to

ELECTRONIC COPY -- NOT FOR BID SUBMITTAL

community organizations when the contractor or its unions have employment opportunities available, and maintain a record of the organizations' responses.

c. Maintain a current file of the names, addresses and telephone numbers of each minority and female off-the-street applicant and minority or female referral from a union, a recruitment source or community organization and of what action was taken with respect to each such individual. If such individual was sent to the union hiring hall for referral and was not referred back to the contractor by the union or, if referred, not employed by the contractor, this shall be documented in the file with the reason therefor, along with whatever additional actions the contractor has taken.

d. Provide immediate written notification to the Director when the union or unions with which the contractor has a collective bargaining agreement has not referred to the contractor a minority person or woman set by the contractor, or when the contractor has other information that the union referral process has impeded the contractor's efforts to meet its obligations.

e. Develop on-the-job training opportunities and/or participate in training programs for the area which include minorities and women, including upgrading programs and apprenticeship and trainee programs relevant to the contractor's employment needs, especially those programs funded or approved by the Department of Labor. The contractor shall provide notice of these programs to the sources compiled under 7b above.

f. Disseminate the contractor's EEO policy by providing notice of the policy to unions and training programs and requesting their cooperation in assisting the contractor in meeting his EEO obligations; by including it in any policy manual and collective bargaining agreement; by publicizing it in the company newspaper, annual report, etc.; by specific review of the policy with all management personnel and with all minority and female employees at least once a year; and by posting the company EEO policy on bulletin boards accessible to all employees at each location where construction work is performed.

g. Review, at least annually, the company's EEO policy and affirmative action obligations under these specifications with all employees having any responsibility for hiring, assignment, layoff, termination or other employment decisions including specific review of these items with on-site supervisory personnel such as superintendent, general foremen, etc., prior to the initiation of construction work at any job site. A written record shall be made and maintained identifying the time and place of these meetings, persons attending, subject matter discussed, and disposition of the subject matter.

h. Disseminate the contractor's EEO policy externally by including it in ny advertising in the news media, including minority and female news media, and providing written notification to and discussing the contractor's EEO policy with other contractors and subcontractors with whom the contractor does or anticipates doing business.

i. Direct its recruitment efforts, both oral and written, to minority, female and community organizations, to schools with minority and female students and to minority and female recruitment and training organizations serving the contractor's recruitment area and employment needs. Not later than 1 month prior to the date for the acceptance of

ELECTRONIC COPY -- NOT FOR BID SUBMITTAL

applications for apprenticeship or other training by any recruitment source, the contractor shall send written notification to organizations such as the above describing the openings, screening procedures and tests to be used in the selection process.

j. Encourage present minority and female employees to recruit other minority persons and women, and where reasonable, provide after school, summer and vacation employment to minority and female youth both on the site and in other areas of a contractor's workforce.

k. Validate all tests and other selection requirements where there is an obligation to do so under 41 CFR 60-3.

l. Conduct, at least annually, an inventory and evaluation of all minority and female personnel for promotional opportunities and encourage these employees to seek or to prepare for, through appropriate training, etc., such opportunities.

m. Ensure that seniority practices, job classifications, work assignments and other personnel practices, do not have a discriminatory effect by continually monitoring all personnel and employment related activities to ensure that the EEO policy and the contractor's obligations under these specifications are being carried out.

n. Ensure that all facilities and company activities are non-segregated except that separate or single-user toilet and necessary changing facilities shall be provided to assure privacy between the sexes.

o. Document and maintain a record of all solicitations of offers for subcontracts from minority and female construction contractors and suppliers, including circulation of solicitations to minority and female contractor associations and other business associations.

p. Conduct a review, at least annually, of all supervisors' adherence to and performance under the contractor's EEO policies and affirmative action obligations.

8. Contractors are encouraged to participate in voluntary associations which assist in fulfilling their affirmative action obligations (7a through p). The efforts of a contractor association, joint contractor-union, contractor-community, or other similar group of which the contractor is a member and participant, may be asserted as fulfilling its obligations under 7a through 7p of these specifications provided that the contractor actively participates in the group, makes every effort to assure that the group has a positive impact on the employment of minorities and women in the industry, ensures that the concrete benefits of the program are reflected in the contractor's minority and female workforce participation, makes a good faith effort to meet his goals and timetables and can provide access to documentation which demonstrates the effectiveness of actions taken on behalf of the contractor. The obligation to comply, however, is the contractor's and failure of such a group to fulfill an obligation shall not be a defense for the contractor's noncompliance.

9. A goal for minorities and a separate goal for women have been established. The contractor, however, is required to provide equal employment opportunity and to take affirmative action for all minority groups, both male and female, and all women, both minority and non-minority. Consequently, the contractor may be in violation of the Executive Order if a group is employed

ELECTRONIC COPY -- NOT FOR BID SUBMITTAL

in a substantially disparate manner (for example, even though the contractor has achieved its goals for women generally, the contractor may be in violation of the Executive Order if a minority group of women in underutilized).

10. The contractor shall not use the goals or affirmative action standards to discriminate against any person because of race, color, religion, sex or national origin.

11. The contractor shall not enter into a subcontract with any person or firm debarred from Government contracts pursuant to Executive Order 11246.

12. The contractor shall carry out such sanctions and penalties for violation of these specifications and of the Equal Opportunity Clause, including suspension, termination and cancellation of existing subcontracts as may be imposed or ordered pursuant to Executive Order 11246, as amended, and its implementing regulations, by the Office of Federal Contract Compliance Programs. Any contractor who fails to carry out such sanctions and penalties shall be in violation of these specifications and Executive Order 11246, as amended.

13. The contractor, in fulfilling his obligations under these specifications, shall implement specific affirmative actions steps, at least as extensive as the standards prescribed in paragraph 7 of these specifications, so as to achieve maximum results from its efforts to ensure equal employment opportunity. If the contractor fails to comply with the requirements of the Executive Order, the implementing regulations or these specifications, the Director shall proceed in accordance with 41 CFR 60-4.8.

14. The contractor shall designate a responsible official to monitor all employment related activity to ensure that the company EEO policy is being carried out, to submit reports relating to the provisions hereof as may be required by the Government and to keep records. Records shall at least include for each employee the name, address, telephone numbers, construction trade, union affiliation if any, employee identification number when assigned, social security number, race, sex, status (e.g., mechanic, apprentice, trainee helper, or laborer), dates of changes in status, hours worked per week in the indicated trade, rate of pay and locations at which the work was performed. Records shall be maintained in an easily understandable and retrievable form; however, to the degree that existing records satisfy this requirement, contractors will not be required to maintain separate records.

15. Nothing herein shall be construed as a limitation on the application of other laws which establish different standards of compliance or on the application of requirements for hiring of local or other area residents (e.g., those under the Pubic Works Employment Act of 1977 and the Community Development Block Grant Program).

16. In addition to the reporting requirements set forth elsewhere in this contract, the contractor and subcontractors holding subcontracts (not including material suppliers) in excess of $10,000

ELECTRONIC COPY -- NOT FOR BID SUBMITTAL

shall submit for every month of July during which work is performed, employment data as contained under Form FHWA-1391 in accordance with instructions included thereon.

ELECTRONIC COPY -- NOT FOR BID SUBMITTAL

LOUISIANA
DEPARTMENT OF TRANSPORTATION AND DEVELOPMENT
SUPPLEMENTAL SPECIFICATIONS

NEW ORLEANS PLAN

Each bidder, contractor or subcontractor (hereinafter called the contractor) must fully comply with these bid conditions as to each construction trade intended to be used on this construction contract and all other construction work (both federal and nonfederal) in New Orleans Plan Area during the performance of this contract or subcontract. The contractor commits to the minority and female employment utilization goals set forth herein and all other requirements, terms and conditions expressed herein by submitting a properly signed bid.

The contractor shall appoint a company executive to assume the responsibility for implementation of the requirements, terms and conditions of these bid conditions.

These specifications implementing the New Orleans Plan for employment of minorities and females have been imposed by the U. S. Department of Labor by order on September 8, 1971, as amended, for all nonexempt federal and federally assisted construction contracts to be awarded in the area of jurisdiction of the Southeast Louisiana Building and Construction Trades Council in the City of New Orleans and Southeast Louisiana. This area consists of the parishes of Orleans, Jefferson, St. Bernard, St. Tammany, St. Charles, St. John the Baptist, Plaquemines, Washington, Terrebonne, Tangipahoa (that area east of the Illinois Central Railroad), Livingston (that area southeast of the line from a point off the Livingston and Tangipahoa Parish line adjacent from New Orleans and Baton Rouge), St. James (that area southeast of a line drawn from the Town of Gramercy to the point of intersection of St. James, Lafourche and Assumption Parishes), and Lafourche.

The provisions of these bid conditions apply to contractors which are party to collective bargaining agreements with labor organizations which together have agreed to the New Orleans Area Construction Program (hereinafter called the New Orleans Plan) for equal opportunity and have jointly made a commitment to goals of minority and female utilization. The New Orleans Plan is a voluntary agreement between (1) Southeast Louisiana Building and Construction Trades Council; (2) contractors and subcontractors who are signatory to the New Orleans Plan; (3) the Urban League of Greater New Orleans and representatives of the minority community; and (4) the City of New Orleans. The New Orleans Plan, together with all implementing agreements that have been and may hereafter be developed pursuant thereto, are incorporated herein by reference.

The requirements set forth herein shall constitute the specific affirmative action requirements for activities under this contract and supplement the equal employment opportunity requirements set forth in the Required Contract Provisions.

ELECTRONIC COPY -- NOT FOR BID SUBMITTAL

The contractor and all subcontractors holding contracts in excess of $10,000 shall comply with the following minimum requirement activities of equal employment opportunity. The contractor shall include these requirements in every subcontract in excess of $10,000 with such modification of language as necessary to make them binding on the subcontractor.

Each contractor and subcontractor shall submit a monthly employment utilization report, Standard Form 257, covering the contractor's entire work force employed on all contracts (both federal and nonfederal) held in the New Orleans Area. In addition, a list of the federal and nonfederal contracts which are covered by the report shall be furnished. The report shall be submitted to the engineer no later than the 10th day following the end of the month being reported. The report shall end on the next to the last Saturday in the month being reported and shall reflect all hours worked between this date and the close out date in the preceding month. Copies of all payrolls and personnel data shall be retained for 3 years after final acceptance of the project. These records and documents, or copies thereof, shall be made available at reasonable times and places for inspection by an authorized representative of the State or Federal Government and shall be submitted upon request with any other compliance information which such representative may require.

In addition to the reporting requirements set forth above, the contractor and the subcontractors holding subcontracts, not including material suppliers, in excess of $10,000 shall submit for every month of July during which work is performed, employment data as contained under Form FHWA-1391, and in accordance with the instructions included thereon.

A contractor may be in compliance with these bid conditions by its participation in the New Orleans Plan and applicable provisions contained in the "Notice of Requirement for Affirmative Action to Ensure Equal Employment Opportunity (Executive Order 11246)" and Standard Federal Equal Employment Opportunity Construction Contract Specifications (Executive Order 11246).

ELECTRONIC COPY -- NOT FOR BID SUBMITTAL

LOUISIANA
DEPARTMENT OF TRANSPORTATION AND DEVELOPMENT

REQUIRED CONTRACT PROVISIONS FOR DBE PARTICIPATION IN FEDERAL AID CONSTRUCTION CONTRACTS (DBE NO GOAL PROJECT)

A. AUTHORITY AND DIRECTIVE: The Code of Federal Regulations, Title 49, Part 26 (49 CFR 26) as amended and the Louisiana Department of Transportation and Development's (DOTD) Disadvantaged Business Enterprise (DBE) Program, are hereby made a part of and incorporated by reference into this contract. Copies of these documents are available upon request, from DOTD, Compliance Programs Office, P. O. Box 94245, Baton Rouge, LA 70804-9245.

B. POLICY: It is the policy of the DOTD that it shall not discriminate on the basis of race, color, national origin, or sex in the award of any United States Department of Transportation (US DOT) financially assisted contracts or in the administration of its DBE program or the requirements of 49 CFR Part 26. The DOTD shall take all necessary and reasonable steps under 49 CFR Part 26 to ensure nondiscrimination in the award and administration of US DOT assisted contracts. The DBE program, as required by 49 CFR Part 26 and as approved by US DOT, is incorporated by reference in this agreement. Implementation of this program is a legal obligation and failure to carry out its terms shall be treated as a violation of this agreement. Upon notification of failure to carry out the approved DBE program, the US DOT may impose sanctions as provided for under 49 CFR Part 26 and may in appropriate cases, refer the matter for enforcement under 18 U.S.C. 1001 and/or the Program Fraud Civil Remedies Act of 1986 (31 U.S.C. 3801 et seq).

C. DBE OBLIGATION: The contractor, subrecipient or subcontractor shall not discriminate on the basis of race, color, national origin, or sex in the performance of this contract. The contractor shall carry out applicable requirements of 49 CFR Part 26 in the award and administration of US DOT assisted contracts. Failure by the contractor to carry out these requirements is a material breach of this contract, which may result in the termination of this contract or such other remedy as the DOTD deems appropriate.

The preceding policy and DBE obligation shall apply to this contract and shall be included in the requirements of any subcontract. Failure to carry out the requirements set forth therein shall constitute a breach of contract and, after notification by DOTD, may result in termination of the contract, a deduction from the contract funds due or to become due the contractor or other such remedy as DOTD deems appropriate. The contractor is encouraged to use the services offered by banks in the community which are owned and controlled by minorities or women when feasible and beneficial.

ELECTRONIC COPY -- NOT FOR BID SUBMITTAL

The term DBE is inclusive of women business enterprises (WBE) and all obligations applicable to DBE shall apply to firms certified and listed as WBE.

D. SPECIFIC CONTRACTOR REQUIREMENTS: This project has not been selected for a specific DBE goal; however, the contractor is required to meet the following obligations and by signing this bid gives the assurances that:

(1) The contractor shall not discriminate on the basis of race, color, national origin, or sex in subcontracting work on this project.

(2) The contractor shall promptly pay subcontractors and suppliers their respective subcontract amounts within 14 calendar days after the contractor receives payment from DOTD for the items of work performed by the subcontractors in accordance with Louisiana Revised Statute 9:2784. Retainage may not be withheld.

a. Delay or postponement of payment to the subcontractor may be imposed by the contractor only when there is evidence that the subcontractor has failed to pay its labor force and suppliers for materials received and used on the project. Delay or postponement must have written approval by the Project Engineer.

(3) The contractor shall submit DOTD Forms OMF-1A, Request to Sublet, and OMF-2A, Subcontractor's EEO Certification and have them approved by the DOTD prior to any subcontracting work being performed. The requirements of Subsection 108.01, Subletting of Contract, of the Project Specifications shall be met.

(4) The contractor understands that these provisions are applicable to all bidders including DBE bidders.

ELECTRONIC COPY -- NOT FOR BID SUBMITTAL

General Decision Number: LA080004 01/16/2009 LA4

Superseded General Decision Number: LA20070006

State: Louisiana

Construction Type: Building

Counties: Acadia, Ascension, Calcasieu, East Baton Rouge, Lafayette, Lafourche, Livingston, St Landry, St Martin, Terrebonne and West Baton Rouge Counties in Louisiana.

BUILDING CONSTRUCTION PROJECTS (does not include residential construction consisting of single family homes and apartments up to and including 4 stories)

Modification Number	Publication Date
0	02/08/2008
1	02/22/2008
2	04/04/2008
3	06/06/2008
4	07/04/2008
5	01/16/2009

* CARP0953-006 02/01/2006

CALCASIEU PARISH

	Rates	Fringes
CARPENTER (includes acoustical, drywall and metal stud installation, and all other work; excludes formwork)...	$ 17.47	3.33

---

* CARP1098-003 02/01/2006

ASCENSION, EAST BATON ROUGE, LIVINGSTON, AND WEST BATON ROUGE PARISHES

	Rates	Fringes
CARPENTER (includes acoustical, drywall and metal stud installation, and all other work; excludes formwork)...	$ 16.50	5.65

---

* CARP1846-007 02/01/2006

LAFOURCHE AND TERREBONNE PARISHES

	Rates	Fringes

ELECTRONIC COPY -- NOT FOR BID SUBMITTAL

CARPENTER (includes
acoustical, drywall and metal
stud installation, and all
other work; excludes formwork)...$ 18.06 5.00

---

* CARP1897-003 02/01/2006

ACADIA, LAFAYETTE, ST. LANDRY, AND ST. MARTIN PARISHES

	Rates	Fringes
CARPENTER (includes acoustical, drywall and metal stud installation, and all other work; excludes formwork)...	$ 14.70	3.95

ELEC0130-008 12/01/2006

LAFOURCHE, ST. MARTIN (Southern Portion), AND TERREBONNE
PARISHES

	Rates	Fringes
ELECTRICIAN (includes low voltage wiring and installation of fire alarms, security systems, telephones, computers, and temperature controls).....	$ 22.09	7.90

ELEC0861-012 09/01/2006

ACADIA, CALCASIEU, LAFAYETTE, AND ST. MARTIN (Northern Portion)
PARISHES

	Rates	Fringes
ELECTRICIAN (includes low voltage wiring and installation of fire alarms, security systems, telephones, computers, and temperature controls).....	$ 21.54	7.81

ELEC0995-005 01/01/2008

ASCENSION, EAST BATON ROUGE, LIVINGSTON, ST. LANDRY, AND WEST
BATON ROUGE PARISHES

	Rates	Fringes
ELECTRICIAN (includes low voltage wiring and		

ELECTRONIC COPY -- NOT FOR BID SUBMITTAL

installation of fire alarms,
security systems, telephones,
computers, and temperature
controls).....$ 21.00 7.69

IRON0058-010 06/01/2008

LAFOURCHE AND TERREBONNE PARISHES

	Rates	Fringes
IRONWORKER, REINFORCING.....	$ 19.40	6.82

IRON0623-006 06/01/2008

ASCENSION, EAST BATON ROUGE, LAFAYETTE (Eastern Portion), LIVINGSTON, ST. MARTIN, ST. LANDRY (Eastern Portion), AND WEST BATON ROUGE PARISHES

	Rates	Fringes
IRONWORKER, REINFORCING.....	$ 19.60	6.32

IRON0710-005 06/01/2008

ACADIA, CALCASIEU, LAFAYETTE (Western Portion), AND ST. LANDRY (Western Portion) PARISHES

	Rates	Fringes
IRONWORKER, REINFORCING.....	$ 19.50	6.43

---

* PLUM0060-006 12/01/2008

LAFOURCHE AND TERREBONNE (City of Houma Only) PARISHES

	Rates	Fringes
PLUMBER (includes HVAC pipe).....	$ 25.02	8.18

---

* PLUM0106-008 07/01/2008

ACADIA, CALCASIEU, LAFAYETTE, ST. LANDRY, AND ST. MARTIN (Western Portion) PARISHES

	Rates	Fringes
PLUMBER (includes HVAC pipe).....	$ 22.50	12.78

---

* PLUM0198-006 01/01/2008

ASCENSION, EAST BATON ROUGE, LIVINGSTON, ST. MARTIN (Eastern Portion), TERREBONNE, AND WEST BATON ROUGE PARISHES

ELECTRONIC COPY -- NOT FOR BID SUBMITTAL

	Rates	Fringes
PLUMBER (includes HVAC pipe).....	$ 22.64	6.88

---

* SFLA0669-004 01/01/2009

	Rates	Fringes
SPRINKLER FITTER.....	$ 25.22	11.80

SHEE0214-002 07/01/2007

Lafourche and Terrebonne Parishes

	Rates	Fringes
SHEET METAL WORKER (includes HVAC Duct).....	$ 22.86	8.72

SHEE0214-006 08/01/2007

Acadia, Ascension, Calcasieu, East Baton Rouge, Lafayette, Livingston, St. Landry, St. Martin, and West Baton Rouge Parishes

	Rates	Fringes
SHEET METAL WORKER (includes HVAC Duct).....	$ 23.36	8.315

SULA2004-002 03/24/2004

	Rates	Fringes
CARPENTER (formbuilding & formsetting).....	$ 13.11	1.53
Cement Mason/Concrete Finisher...	$ 12.88	0.00
Laborer, common.....	$ 8.95	1.57
Power Equipment Operator		
Backhoe.....	$ 12.45	0.00
Bulldozer.....	$ 14.32	1.55
Crane.....	$ 15.96	3.16
ROOFER, Including Built Up, Composition and Single Ply Roofs.....	$ 12.97	0.96
TRUCK DRIVER		
Flatbed.....	$ 10.00	0.00
Pickup.....	$ 8.80	0.00

ELECTRONIC COPY -- NOT FOR BID SUBMITTAL

WELDERS - Receive rate prescribed for craft performing operation to which welding is incidental.

==========

Unlisted classifications needed for work not included within the scope of the classifications listed may be added after award only as provided in the labor standards contract clauses (29CFR 5.5 (a) (1) (ii)).

In the listing above, the "SU" designation means that rates listed under the identifier do not reflect collectively bargained wage and fringe benefit rates. Other designations indicate unions whose rates have been determined to be prevailing.

WAGE DETERMINATION APPEALS PROCESS

1.) Has there been an initial decision in the matter? This can be:

* an existing published wage determination
* a survey underlying a wage determination
* a Wage and Hour Division letter setting forth a position on a wage determination matter
* a conformance (additional classification and rate) ruling

On survey related matters, initial contact, including requests for summaries of surveys, should be with the Wage and Hour Regional Office for the area in which the survey was conducted because those Regional Offices have responsibility for the Davis-Bacon survey program. If the response from this initial contact is not satisfactory, then the process described in 2.) and 3.) should be followed.

With regard to any other matter not yet ripe for the formal process described here, initial contact should be with the Branch of Construction Wage Determinations. Write to:

Branch of Construction Wage Determinations
Wage and Hour Division
U.S. Department of Labor
200 Constitution Avenue, N.W.
Washington, DC 20210

2.) If the answer to the question in 1.) is yes, then an interested party (those affected by the action) can request review and reconsideration from the Wage and Hour Administrator (See 29 CFR Part 1.8 and 29 CFR Part 7). Write to:

Wage and Hour Administrator
U.S. Department of Labor
200 Constitution Avenue, N.W.
Washington, DC 20210

ELECTRONIC COPY -- NOT FOR BID SUBMITTAL

The request should be accompanied by a full statement of the interested party's position and by any information (wage payment data, project description, area practice material, etc.) that the requestor considers relevant to the issue.

3.) If the decision of the Administrator is not favorable, an interested party may appeal directly to the Administrative Review Board (formerly the Wage Appeals Board). Write to:

Administrative Review Board
U.S. Department of Labor
200 Constitution Avenue, N.W.
Washington, DC 20210

4.) All decisions by the Administrative Review Board are final.

==========

END OF GENERAL DECISION

ELECTRONIC COPY -- NOT FOR BID SUBMITTAL

STATE OF LOUISIANA
DEPARTMENT OF TRANSPORTATION AND DEVELOPMENT
PLANS OF PROPOSED

STATE HIGHWAY

FEDERAL AID PROJECT NO. ER-ERE3(032)
STATE PROJECT NO. 245-90-0061
REPAIRS TO BAYOU DULARGE CONTROL HOUSE
TERREBONNE PARISH
LA 315

SPN 245-90-0061
F.A.P. ER-ERE3(032)
C.S. 245-90
LOG MILE 9.80
LAT 29°34'4.80" N
LON 90°43'14.70" W

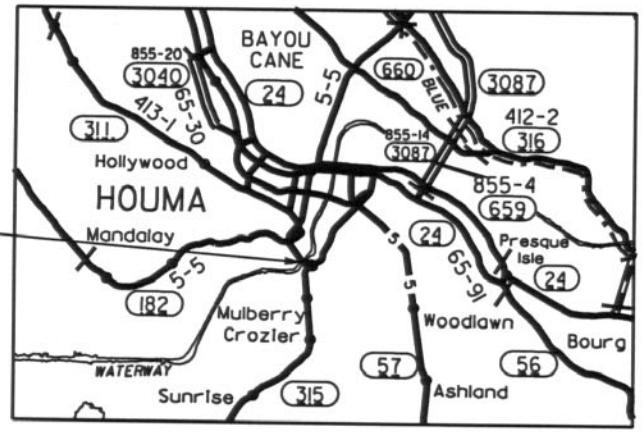

STATE OF LOUISIANA
MICHAEL J. STACK
REG. No. 25613
REGISTERED PROFESSIONAL ENGINEER IN CIVIL ENGINEERING

RECOMMENDED FOR APPROVAL

03/06/09
DISTRICT 02 ASSISTANT ADMINISTRATOR OF ENGINEERING

03/06/09
DATE

APPROVED BY: DISTRICT 02 ADMINISTRATOR

3/6/09
DATE

TYPE OF CONSTRUCTION : REPAIR STRUCTURAL AND ELECTRICAL DAMAGES TO CONTROL HOUSE AND RELATED WORK

NOTE : THE 2006 LOUISIANA DOTD STANDARD SPECIFICATIONS FOR ROADS AND BRIDGES, AS AMENDED BY THE PROJECT SPECIFICATIONS, SHALL GOVERN ON THIS PROJECT

SHEET NUMBER 1
PARISH TERREBONNE
FEDERAL PROJECT ER-ERE3(032)
STATE PROJECT 245-90-0061

NO.	DATE	REVISION DESCRIPTION	BY

DISTRICT 02 DESIGN

ELECTRONIC COPY -- NOT FOR BID SUBMITTAL

INDEX TO SHEETS

SHEET NO.	DESCRIPTION
1-	TITLE SHEET
2-	INDEX & PROJECT DESCRIPTION
3-	GENERAL NOTES
4-	SUMMARY OF ESTIMATED QUANTITIES
5-	PLAN VIEW
6a - 6d	TC SHEETS
	AS-BUILT PLANS

TOTAL SHEETS 46

LOCATION DESCRIPTION

THHIS PROJECT IS LOCATED ON THE BAYOU DULARGE BRIDGE, LOCATED ON LA 315, CONTROL SECTION 245-90, LOG MILE 9.80, 90° 34'4.80" N, 90° 43'14.70" W. THE CONTROL HOUSE IS ATTACHED TO THE BRIDGE DECK ON THE SOUTHEAST SIDE OF THE BRIDGE.

SCOPE OF PROJECT

THE SCOPE OF THIS PROJECT SHALL BE TO COMPLETE ALL REPAIRS TO THE CONTROL HOUSE AND CONTROL HOUSE CONTENTS.

SHEET NUMBER 2

PARISH TERREBONNE

FEDERAL PROJECT

STATE PROJECT 245-90-0061

STATE OF LOUISIANA

NO.	DATE	REVISION DESCRIPTION	BY

DISTRICT 02 DESIGN

ELECTRONIC COPY -- NOT FOR BID SUBMITTAL

GENERAL CONSTRUCTION NOTES

1. THE CONTRACTOR SHALL TAKE CARE NOT TO DAMAGE ANY STRUCTURES OR SURRONDING PROPERTY. ANY DAMAGES SHALL BE RESTORED TO ORIGINAL CONDITION OR BETTER BY THE CONTRACTOR TO THE STAISFACTION OF THE PROJECT ENGINEER AND AT NO COST TO THE DEPARTMENT.

2. THE CONTRACTOR SHALL BE ALLOWED TO CLOSE ONE LANE OF TRAFFIC FOR SHORT PERIODS OF TIME FOR THE PURPOSE OF LOADING AND UNOADING OF MATERIALS. IF A LANE CLOSURE IS REQUIRED FOR AN EXTENDED PERIOD OF TIME, THE CONTRACTOR SHALL REQUEST APPROVAL FROM THE PROJECT ENGINEER. THE CONTRACTOR SHALL BE RESPONSIBLE FOR COMPLETING ALL REQUIRED LANE CLOSURES. ALL LANE CLOSURES SHALL BE CONDUCTED IN ACCORDANCE WITH THE TRAFFIC CONTROL SHEETS INCLUDED IN PLANS AND THE MUTCD. PAYMENT FOR ALL TRAFFIC CONTROL SHALL BE INCLUDED IN ITEM 713-01.

3. THE WATERWAY SHALL REMAIN OPEN TO MARINE TRAFFIC AT ALL TIMES. AT THE TIME OF REQUIRED OPENING AND CLOSING CONSTRUCTION PERSONNEL SHALL STOP WORK AND PROVIDE A SAFE ENVIROMENT FOR THE BRIDGE OPERATOR TO PERFORM THE OPENING AND CLOSING.

4. IF ELECTRICAL SERVICE TO THE CONTROL DESK SHALL BE REMOVED DURING CONSTRUCTION THE CONTRACTOR SHALL REQUEST APPROVAL FROM THE PROJECT ENGINEER TO CLOSE THE BRIDGE TO VEHICULAR TRAFFIC. THE CONTRACTOR SHALL PROVIDE A ROADWAY DETOUR PLAN TO THE PROJECT ENGINEER FOR APPROVAL. THE DETOUR SHALL REMAIN ON STATE ROUTES AND IN ACCORDANCE WITH THE TRAFFIC CONTROL SHEETS AND THE MUTCD. THE CONTRACTOR SHALL ALLOW DOTD TO RAISE THE BRIDGE PRIOR TO REMOVING ELECTRICAL SERVICE TO THE CONTROL DESK. THE DETOUR SHALL BE IN PLACE PRIOR TO RAISING THE BRIDGE. ALL COST ASSOCIATED WITH TRAFFIC CONTROL AND DETOUR ROUTE SHALL BE INCLUDED IN ITEM 713-01. IF POWER IS NOT REMOVED FROM THE CONTROL DESK THE CONTRACTOR DOES NOT HAVE TO CLOSE BRIDGE TO VEHICULAR TRAFFIC OR ESTABLISH A DETOUR ROUTE.

5. THE CONTRACTOR SHALL NOTIFY THE PROJECT ENGINEER AT LEAST 48 HOURS PRIOR TO ANY EXTENDED LANE CLOSURES. THE PROJECT ENGINEER SHALL BE RESPONSIBLE FOR NOTIFYING THE MEDIA.

6. THE CONTRACTOR SHALL BE ALLOWED TO USE THE SPECIFIED AREAS AS CONSTRUCTION STORAGE AREAS. SEE SHEET NO. 5. THE CONTRACTOR SHALL NOT STORE ANY MATERIALS OR EQUIPMENT ON THE BRIDGE DECK. THE CONTRACTOR SHALL NOT STORE ANY EQUIPMENT OR MATERIALS WITHIN 30 FT OF THE EDGE OF TRAVEL WITHIN THE STORAGE AREA. THE CONTRACTOR SHALL BE RESPONSIBLE FOR REMOVING ALL MATERIAL AND EQUIPMENT FROM THIS AREA UPON COMPLETION OF THE PROJECT. THIS AREA SHALL BE RETURNED TO IT'S ORIGINAL CONDITION AND TO THE SATISFACTION OF THE PROJECT ENGINEER AT NO COST TO THE DEPARTMENT.

7. ALL CONSTRUCTION SHALL CONFORM TO CURRENT CODES FOR THE TYPE OF WORK AND LOCATION OF THE WORK BEING PERFORMED.

8. IT SHALL BE THE CONTRACTOR'S RESPONSIBILITY TO VISIT THE SITE TO DETERMINE EXISTING CONDITIONS, PRIOR TO SUBMITTING A BID. TO VISIT THE SITE CONTACT KEITH ANGELETTE, (985)858-2403.

SHEET NUMBER	3
PARISH	TERREBONNE
FEDERAL PROJECT	
STATE PROJECT	245-90-0061

NO.	DATE	REVISION DESCRIPTION	BY

DISTRICT 02 DESIGN

ELECTRONIC COPY -- NOT FOR BID SUBMITTAL

DATED 3/6/2009 9:30

STATE PROJECT	PARISH	SHEET NO.
245-60-0091	TERREBONNE	

SUMMARY OF ESTIMATED QUANTITIES

ITEM NO.	ITEM	UNIT	QUANTITY S.P. NO. 245-60-0091	TOTAL QUANTITY
713-01	TEMPORARY SIGNS AND BARRICADES	LUMP	LUMP SUM	
727-01	MOBILIZATION	LUMP	LUMP SUM	
S-001	CANOPY LIGHTS	EACH	4	
S-002	ROOFING SYSTEM	LUMP	LUMP SUM	
S-003	AIR CONDITIONER/ HEATER UNIT	EACH	1	
S-004	WINDOW SYSTEM	LUMP	LUMP SUM	
S-005	EXTERIOR DOOR	EACH	1	
S-006	DROP CEILING SYSTEM	LUMP	LUMP SUM	
S-007	METAL PANELING	LUMP	LUMP SUM	
S-008	INTERIOR DOOR	EACH	1	
S-009	ELECTRICAL WORK	LUMP	LUMP SUM	
S-010	LAVATORY EXHAUST FAN	EACH	1	
S-011	CLEANING AND PAINTING OF INTERIOR OF CONTROL HOUSE	LUMP	LUMP SUM	
S-012	AIR COMPRESSOR	EACH	1	
S-013	FLOURECENT LIGHT FIXTURES	LUMP	LUMP SUM	
S-014	REPAIR TRAFFIC WARNING SIGNALS	EACH	4	
S-015	REPAIR SPAN LIGHTS	EACH	4	

SHEET NUMBER 4

PARISH: TERREBONNE

FEDERAL PROJECT:

STATE PROJECT: 245-90-0061

STATE OF LOUISIANA

NO.	DATE	REVISION DESCRIPTION	BY

DISTRICT 02 DESIGN

ELECTRONIC COPY -- NOT FOR BID SUBMITTAL

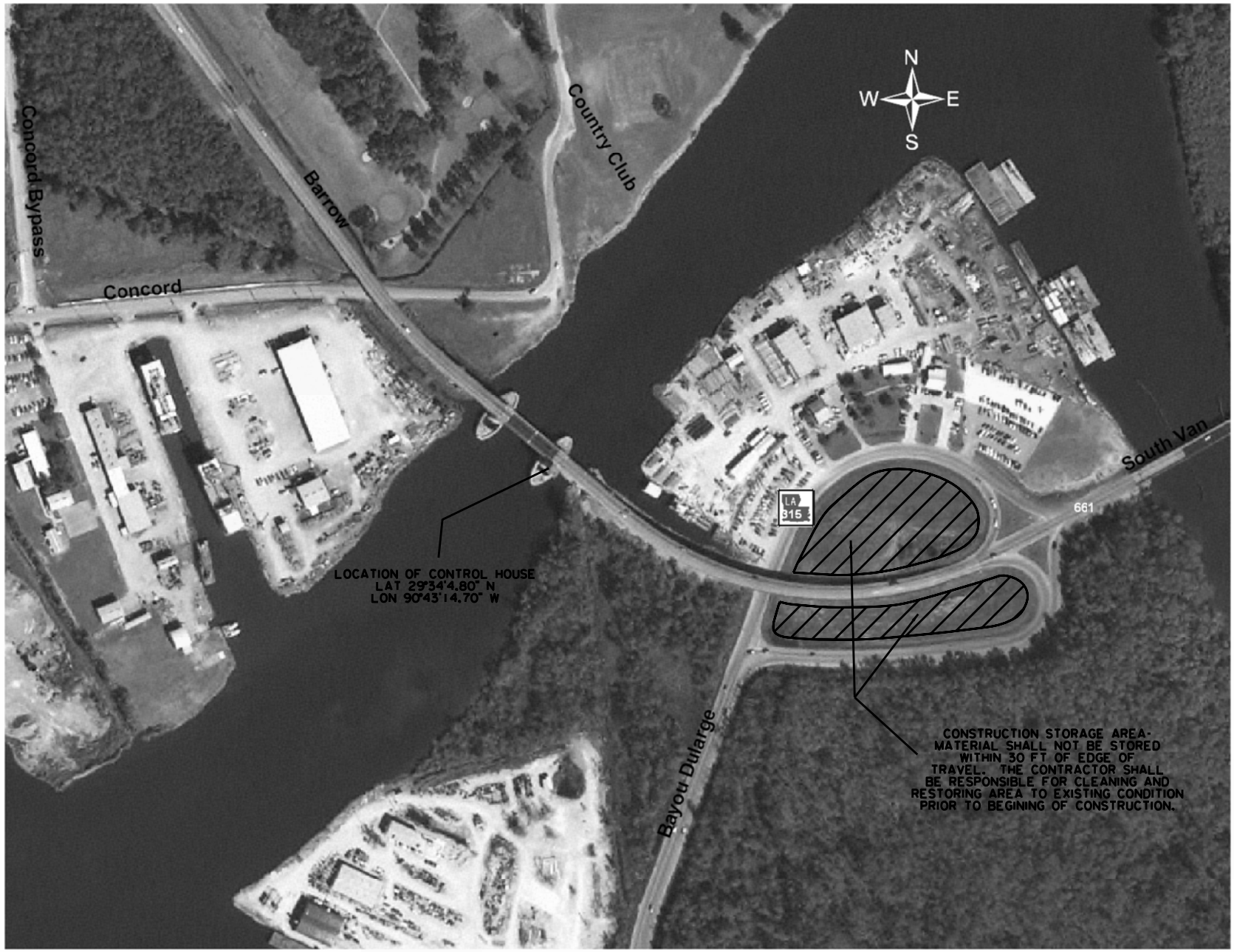

PLAN VIEW

SHEET NUMBER	5
PARISH	TERREBONNE
FEDERAL PROJECT	
STATE PROJECT	245-90-0061

NO.	DATE	REVISION DESCRIPTION	BY

DISTRICT 02
DESIGN

ELECTRONIC COPY -- NOT FOR BID SUBMITTAL

GENERAL PROVISIONS

- All Temporary Traffic Control Devices used shall be in accordance with the LaDOTD Standard Specifications for Roads and Bridges, the Manual on Uniform Traffic Control Devices (MUTCD), and shall meet the National Cooperative Highway Research Program (NCHRP) 350 for Test Level 3 requirements.
- Materials used for Temporary Traffic Controls shall be in accordance with the LaDOTD Standard Specifications for Roads and Bridges and when applicable the LaDOTD Qualified Products List (QPL).
- No temporary traffic controls shall be erected without the approval of the Project Engineer and until work is about to begin, unless they are covered.
- No lane closures, lane shifts, diversions, or detours shall occur without the authorization of the Project Engineer.
- Responsibility is hereby placed upon the contractor for the installation, maintenance, and operation of all temporary traffic control devices called for in these plans or required by the Project Engineer for the protection of the traveling public as well as all Department and construction personnel.
- The contractor shall also be responsible for the maintenance of all permanent signs and pavement markings left in place as essential to the safe movement and guidance of traffic within the project limits.
- The District Traffic Operations Engineer (DTOE) shall serve as a technical advisor to the Project Engineer for all Traffic Control matters.
- "Road Work Next XX Miles" sign shall be required on all projects equal to or greater than 2 miles and located at the begining of the project unless otherwise noted. The distance on the sign shall be stated to the nearest whole mile. The sign shall be a minimum 36"X60" unless otherwise noted.
- Warning signs used for lane closures or lane shifts in which the roadway shall be returned to full public use within 12 hours or less may be placed on NCHRP350 approved portable sign frames.
- If the spacing on the plans need to be altered, the new spacings need to be approved by the Project Engineer.

SPEED LIMITS

- Speed limits shall be lowered by 10 mph for any construction, maintenance, or utility operation that requires one or more of the following:
  (A) the condition of the original highway is degraded due to milled surfaces or uneven pavements;
  (B) work is in progress in the immediate vicinity of the travel way requiring lane closures, lane width reductions, or low speed diversions; (C) workers present on the shoulder within 2' of the edge of traveled way without barrier protection.
- The reduced speed zone shall only apply to those portions of the project limits affected. The Project Engineer may allow SPEED LIMIT WHEN FLASHING signs to supplement reduced speed zones.
- At the end of the reduced speed zone, a speed limit sign displaying the original speed limit before construction shall be installed.
- If conditions warrant, the District Traffic Operations Engineer may authorize the reduction of the speed limit by more than 10 mph.

PAVEMENT MARKINGS (see QPL)

- All pavement markings within the limits of the project that are in conflict with the project signing or the required traffic movements shall be removed from the pavement by blast cleaning or grinding (Existing striping shall not be painted over with black paint or covered with tape).
- If special pavement markings are needed, they shall be reflectorized, removable, and accompanied by the proper signage.
- Temporary Raised Pavement Markers (RPMs) may be added to supplement temporary striping in areas of transition, in tapers, in detours, and in other areas of need as directed by the Project Engineer.
- Materials and placement of temporary pavement markings shall conform to section 713 of the Standard Specifications. If no pay item exists, temporary markings will be considered incidental to traffic control.

SIGNS

- All signs used for temporary traffic controls shall follow the Department's Traffic Control (TC) details and the MUTCD. Signs shown in the TC Illustrations are typical and may vary with each specific condition.
- More appropriate signing for a specific condition may be required or substituted with the approval of the Project Engineer and reviewed by the District Traffic Operations Engineer.
- When projects are separated by less than one mile, they shall be signed as one project.
- At no time shall signs warning against a particular operation be left in place once the operation has been completed or where the obstacle has been removed.
- Signs over 10 sq ft shall be mounted on two post and signs over 20 sq ft shall be mounted on at least three post.
- Signs shall have a minimum of two bolts per post.
- Permanent signs no longer applicable or in conflict shall be removed or covered with a strong, lightweight, opaque material.
- Warning signs used for temporary traffic controls shall meet the following guidelines unless otherwise noted in the plans:
  (A) size shall be 48" x 48", (B) see the Departments Standard Specifications and the QPL for sheeting information, (C) a minimum of a 2 lb U-Channel post shall be used driven to a minimum depth of 3', (D) sign height shall be a minimum of 5' above the roadway surface unless there is a concern for pedestrians or bicycle traffic in which it shall be a minimum of 7', (E) lateral distance of signs shall be a minimum of 6' from the edge of shoulder or edge of pavement if no shoulder exist and 2' from the back of curb in urban areas.
- Vinyl Roll Up signs will be allowed for short term (less than 12 hours) daytime work provided that they meet all size, color, retroreflectivity requirements, and NCHRP 350.
- Mesh rollup signs shall not be allowed on any project.
- All signs shall be removed or covered when no longer applicable.
- Contractor shall use caution not to damage existing signs which remain in place. Any DOTD signs damaged by work operations shall be replaced.

CHANNELIZING DEVICES

- The following devices may be used:
  Tubular Markers, Vertical Panels, Cones, Drums, and Super Cones. Drums (at standard spacing) and Super Cones (at ½ standard spacing) are the only devices allowed to be used in taper areas on the interstate system during daylight hours. Only drums can be used in tapers during night operations.
- The spacing of channelizing devices in a taper should not exceed a distance in feet equal to 1.0 times the posted speed limit in mph (with a maximum of 50 feet).
- The spacing of channelizing devices in a tangent should not exceed a distance in feet equal to 2.0 times the posted speed limit in mph (with a maximum of 100 feet) unless otherwise noted.
- Retroreflective material pattern used on super cones shall match that used on drums.
- 28" traffic cones are not allowed on: 1) Interstates, 2) Highways with speeds greater than 40 mph. During night time operations: 1) 28" and 36" cones are not allowed, 2) drums are the only device allowed in the taper.

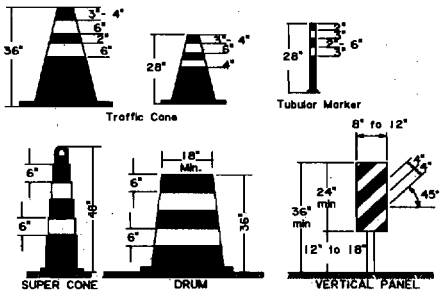

PORTABLE CHANGEABLE MESSAGE SIGNS

- When working within the traveled way, including shoulders and auxiliary lanes, Changeable Message Signs (CMS) shall be used on all Interstate Highways and on all other roadways (where space is available) with an ADT greater than 20,000 and should be delineated with retroreflective TTC devices. CMS will be paid for by each.
- When used in advance of a lane closure or a lane shift, the CMS should be placed on the right hand side of the road a minimum distance of 2 miles in advance of the taper for Interstates and to be determined by the Engineer on other highways.
- If vehicles are queing beyond the 2 mile CMS, an additional CMS should be placed on the right hand side of the road approximately 5 miles in advance of the taper for Interstates.
- CMS messages shall be approved by the District Traffic Operations Engineer (DTOE).
- When Portable Changeable Message signs are not being used, they should be removed; If not removed, they should be shielded by guardrail or barriers; or if the previous two options are not feasible, they should be delineated with retroreflective TTC devices.

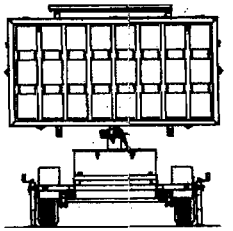

FLAGGERS

- All flaggers must be qualified. The contractor shall be responsible for training or assuring that all flaggers are qualified to perform flagging duties. A Qualified Flagger is one that has completed courses such as those offered by the American Traffic Safety Services Association (ATSSA), The Associated General Contractors of America (AGC) or other courses approved by the Louisiana DOTD's Work Zone Task Force. The contractor shall be responsible for getting the flagger course approved.
- When utilized, a flagger shall use a minimum 18 inch octagonal shape sign on a minimum 6' stop/slow paddle and wear ANSI Class 2 Lime Green vest during day time operations and ANSI Class 3 Lime Green ensemble during night operations. In all flagging operations, the flagger must be visible from the flagger advance warning sign.

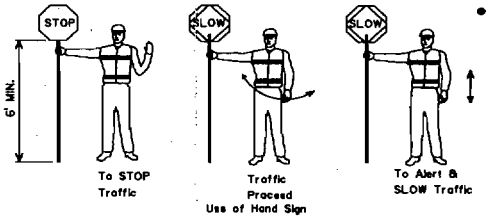

TYPE III BARRICADES

- All barricades shall use Type 3 High Intensity Sheeting on both sides of the barricade.
- All Type III Barricades shall be a minimum of 8 feet in length and must meet NCHRP 350 requirements.
- When signs and lights are to be mounted to a barricade, they must meet NCHRP 350 requirements.

MUTCD Website:
http://mutcd.fhwa.dot.gov/

FLASHING ARROW PANELS

- Flashing Arrow Panels shall be used for lane closures on all facilities with 2 or more lanes in a single direction and a speed limit greater than 35 mph.
- When used, flashing arrow panels should be located on the shoulder at the beginning of the taper.
- Where the shoulder width is limited, the flashing arrow panel should be placed within the closed lane as close to the beginning of the taper as practical.
- All Flashing Arrow Panels used on high speed roadways (45 mph and greater) shall be 4' x 8' Type C.
- When Flashing Arrow Panels signs are not being used, they should be removed; If not removed, they should be shielded by guardrail or barriers; or if the previous two options are not feasible, they should be delineated with retroreflective TTC devices.

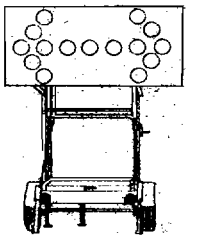

LIGHTING (see QPL)

- When used for overnight closures, lighting shall supplement all barricades that are placed in a closed lane or that extend across a highway. Two Type B High Intensity lights shall be used per lane closed in rural areas. In urban areas two Type A Low Intensity Lights may be used where adequate ambient lighting is available.
- One Type B High Intensity light shall be used to supplement the first sign (or pair of signs) that gives warning about a lane closure during night time operations.
- Type C steady burn lights shall be used on all channelizing devices in the taper as well as the first two devices in the tangent, for night use.

ALLOWABLE LAP SPLICE FOR U-CHANNEL POST

- U-Channel posts may be spliced where long lengths are required. The upper section shall overlap the lower section by at least 24 inches. The bottom edge of the upper section of the splice shall be a minimum of 24 inches above the ground. The spliced sections shall be secured with at least four ⅝-inch diameter hex bolts spaced equally along the splice.

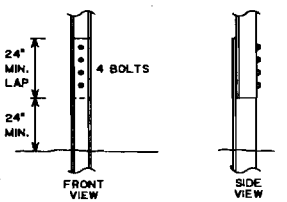

STATE OF LOUISIANA
CARL E. COURVILLE
REG. No. 29815
REGISTERED
PROFESSIONAL
ENGINEER
IN
CIVIL ENGINEERING
JANUARY 15, 2008

TRAFFIC ENGINEERING

TEMPORARY TRAFFIC CONTROL
GENERAL NOTES SHEET

TC-00

ELECTRONIC COPY -- NOT FOR BID SUBMITTAL

NO.	DATE	REVISION DESCRIPTION	BY

DESIGNED	E. COURVILLE	PARISH	TERREBONNE	SHEET NO.
CHECKED	J. COLVIN			6a
DETAILED	D. SOWARDS	FEDERAL PROJECT		
CHECKED	J. COLVIN			
DATE	01/25/2008	STATE PROJECT	245-90-0061	
SHEET				

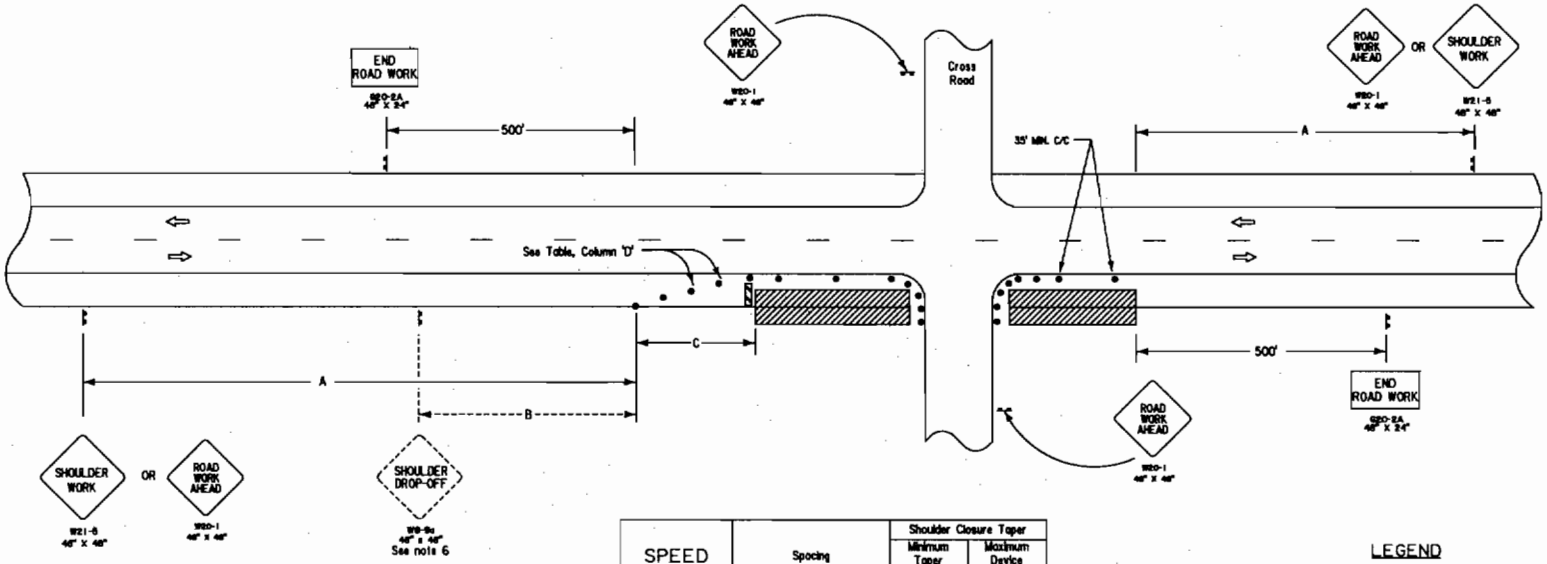

SPEED LIMIT	Spacing		Shoulder Closure Taper	
			Minimum Taper Length	Maximum Device Spacing
	'A'	'B'	'C'	'D'
35 mph	500'	250'	100'	25'
45 mph	1000'	350'	200'	45'
≥55 mph	1500'	500'	250'	50'

If horizontal curve radius is less than 300', devices spacing shall be 25'.

LEGEND

- Traffic Sign
- Channelizing Devices
- Work Area
- Type III Barricades

NOTES

THIS SHEET SHALL BE USED WITH THE "TEMPORARY TRAFFIC CONTROL GENERAL NOTES SHEET (TC-00)".

1. THIS LAYOUT REPRESENTS TRAFFIC CONTROLS REQUIRED FOR WORKERS AND EQUIPMENT OPERATING WITHIN THE CLEAR ZONE FOR MORE THAN 1 HOUR. LESS THAN 1 HOUR, SEE FIG. TA-4 OF THE MUTCD. PORTABLE SIGNS MAY BE USED FOR WORK LASTING LESS THAN 3 DAYS.

2. NO SIGNS OR BARRICADES ARE REQUIRED FOR EQUIPMENT OPERATING OR WORK IN PROGRESS OUTSIDE THE CLEAR ZONE.

3. SIGNS AND BARRICADES SHALL BE COVERED OR REMOVED DURING NONWORKING HOURS UNLESS A DROP-OFF OR PHYSICAL OBSTRUCTION REMAINS WITHIN THE CLEAR ZONE.

4. TRAFFIC CONES MAY BE USED AS CHANNELIZING DEVICES ALONG THE WORK AREA DURING DAYLIGHT HOURS ONLY.

5. WORK OR EQUIPMENT CONFINED TO A SPOT LOCATION (LESS THAN 200 FEET) SHALL BE MARKED BY CHANNELIZING DEVICES SPACED AT 25 FEET OR BY A VEHICLE WITH A YELLOW REVOLVING LIGHT OR YELLOW STROBE LIGHT VISIBLE TO ONCOMING TRAFFIC. WORK EXTENDING MORE THAN 200 FEET OF ROADWAY LENGTH SHALL BE MARKED WITH APPROPRIATE DEVICES SPACED AS NOTED IN THE TABLE.

6. SHOULDER DROP-OFFS

   A. WHEN A SHOULDER DROP-OFF GREATER THAN 2" BUT LESS THAN 6" EXISTS, A "SHOULDER DROP-OFF" SIGN WILL FOLLOW THE "SHOULDER WORK" SIGN. WHEN THE DROP-OFF EXCEEDS 6", THE "SHOULDER DROP-OFF" SIGN SHALL BE REPLACED BY A "NO SHOULDER" SIGN.

   B. IF THE SPEED LIMIT IS GREATER THAN 45 MPH AND THE DROPOFF IS 10" OR GREATER WITHIN 2' OF THE TRAVEL LANE DURING NONWORKING HOURS, A PORTABLE BARRIER SHALL BE USED.

7. A TEMPORARY EDGELINE OR CHANNELIZING DEVICE SHALL BE PLACED AT THE PAVEMENT EDGE ADJACENT TO THE DROP-OFF DURING NONWORKING HOURS WHEN THE DROPOFF IS GREATER THAN 2".

8. SPEED LIMIT IN THE ABOVE TABLE REFERS TO THE LEGALLY ESTABLISHED SPEED LIMIT BEFORE CONSTRUCTION. IF WORKERS ARE PRESENT WITHIN 2' OF TRAVEL LANE, SPEED LIMIT MAY NEED TO BE REDUCED.

9. WHEN A WORK AREA HAS BEEN ESTABLISHED ON ONE SIDE OF THE ROADWAY ONLY, THERE SHALL BE NO CONFLICTING OPERATIONS OR PARKING ON THE OPPOSITE SHOULDER WITHIN 500 FEET OF THE WORK AREA.

10. ANY SIGNS IN CONFLICT WITH CONSTRUCTION SIGNING SHALL BE REMOVED OR COVERED.

11. MINIMUM CONSTRUCTION SIGNING: ANY ADDITIONAL SIGNS SHOWN IN THE "MANUAL ON UNIFORM TRAFFIC CONTROL DEVICES" AND REQUIRED BY THE PROJECT ENGINEER SHALL BE INSTALLED UNDER ITEM 713-01.

12. TYPE III BARRICADES SHALL BE PLACED IN THE CLOSED LANE AT A 1000' INTERVAL WHERE NO ACTIVE WORK IS ON GOING AND THE LANE MUST REMAIN CLOSED. TYPE III BARRICADES ARE ALSO REQUIRED BEFORE EACH OR GROUP OF UNFILLED HOLES OR HOLES FILLED WITH TEMPORARY MATERIAL, OR WHERE UNCURED CONCRETE EXISTS.

STATE OF LOUISIANA
EARL E. COURVILLE
REGISTERED PROFESSIONAL ENGINEER
No. 31811
CIVIL ENGINEERING
JANUARY 17, 2008

TRAFFIC ENGINEERING

TRAFFIC CONTROL LAYOUT
FOR WORK LESS THAN 15' FROM THE TRAVELED LANE

TC-01

ELECTRONIC COPY -- NOT FOR BID SUBMITTAL

NO.	DATE	REVISION DESCRIPTION	BY

DESIGNED	E. COURVILLE	PARISH	TERREBONNE
CHECKED	J. COLVIN		
DETAILED	D. SOWARDS	FEDERAL PROJECT	
CHECKED	J. COLVIN		
DATE	01/25/2008	STATE PROJECT	245-90-0061
SHEET			

SHEET NO. 6b

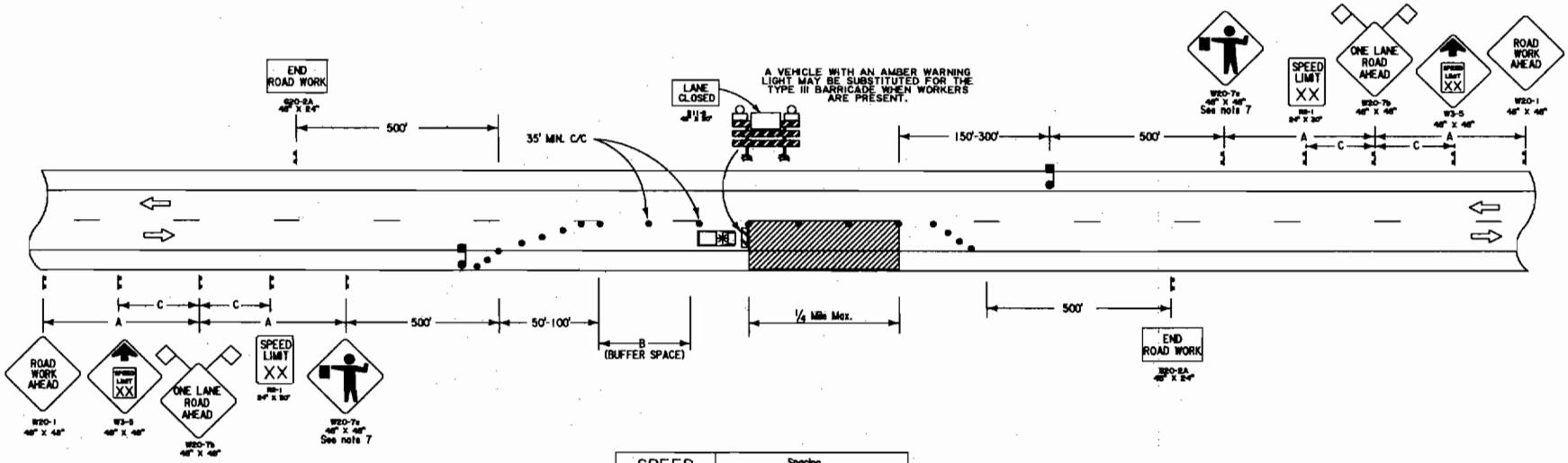

SPEED LIMIT (See note 5)	Spacing		
	"A"	"B"	"C"
35 mph	500'	250'	N/A
45 mph	1000'	360'	500'
55 mph	1500'	495'	800'

SIGN SPACING TO BE ADJUSTED FOR HORIZONTAL & VERTICAL CURVES.

LEGEND

- Traffic Sign
- Flagger
- Channelizing Devices
- Type III Barricades
- Work Area
- Type B Light

NOTES

THIS SHEET SHALL BE USED WITH THE "TEMPORARY TRAFFIC CONTROL GENERAL NOTES SHEET (TC-00)".

1. CONDITIONS REPRESENTED ARE FOR WORK WHICH REQUIRES CLOSING TRAFFIC LANES DURING DAYLIGHT HOURS ONLY. PORTABLE SIGNS MAY BE USED FOR WORK LASTING LESS THAN 3 DAYS.
2. WHEN A WORK AREA HAS BEEN ESTABLISHED ON ONE SIDE OF THE ROADWAY ONLY, THERE SHALL BE NO PARKING ON THE OPPOSITE SHOULDER WITHIN 500 FEET OF THE WORK AREA.
3. CHANNELIZING DEVICES MAY BE PLACED UP TO 2' BEYOND CENTER-LINE ONLY AT SPECIFIC LOCATIONS WHERE ACTUAL WORK ACTIVITY IS TAKING PLACE. A 10' MINIMUM TRAVELED LANE SHOULD BE MAINTAINED WHERE PRACTICAL. CHANNELIZING DEVICES SHALL BE RETURNED TO THE CENTERLINE WHEN THE WORK ACTIVITY HAS PASSED.
4. SPACING OF CHANNELIZING DEVICES IN THE TAPER SHOULD BE NO MORE THAN 20'. A MINIMUM OF 5 CHANNELIZING DEVICES ARE TO BE USED IN THE TAPER.
5. SPEED LIMIT REFERS TO THE LEGALLY ESTABLISHED SPEED LIMIT BEFORE CONSTRUCTION.
6. TO PREVENT VEHICLES FROM ENTERING THE WORK AREA AGAINST THE FLOW OF TRAFFIC, AN ADDITIONAL FLAGGER SHALL BE STATIONED AT EACH INTERSECTION, MAJOR DRIVEWAY, RAILROAD CROSSING OR CROSSING WITHIN THE WORK AREA.
7. VISUAL OR RADIO CONTACT SHALL BE REQUIRED BETWEEN FLAGGERS AT ALL TIMES. THE FLAGGER SHALL BE VISIBLE FROM FLAGGER SIGN.
8. ANY SIGNS IN CONFLICT WITH CONSTRUCTION SIGNING SHALL BE REMOVED OR COVERED BY THE CONTRACTOR.
9. MINIMUM CONSTRUCTION SIGNING: ANY ADDITIONAL SIGNS SHOWN IN THE "MANUAL ON UNIFORM TRAFFIC CONTROL DEVICES" AND REQUIRED BY THE PROJECT ENGINEER SHALL BE INSTALLED UNDER ITEM 713-01.
10. TYPE III BARRICADES SHALL BE PLACED IN THE CLOSED LANE AT A 1000' INTERVAL WHERE NO ACTIVE WORK IS ON GOING AND THE LANE MUST REMAIN CLOSED. TYPE III BARRICADES ARE ALSO REQUIRED BEFORE EACH OR GROUP OF UNFILLED HOLES OR HOLES FILLED WITH TEMPORARY MATERIAL, OR WHERE UNCURED CONCRETE EXISTS.
11. NEITHER WORK ACTIVITY NOR STORAGE OF EQUIPMENT, VEHICLES, OR MATERIALS SHALL OCCUR WITHIN THE BUFFER SPACE.

STATE OF LOUISIANA
CARL E. COURVILLE
NO. 29812
REGISTERED PROFESSIONAL ENGINEER IN CIVIL ENGINEERING
JANUARY 15, 2008

TRAFFIC ENGINEERING

TRAFFIC CONTROL LAYOUT
FOR LANE CLOSURE LESS THAN 1/4 MILE IN LENGTH

TC-02

ELECTRONIC COPY -- NOT FOR BID SUBMITTAL

NO.	DATE	REVISION DESCRIPTION	BY

DESIGNED	E. COURVILLE	PARISH	TERREBONNE
CHECKED	J. COLVIN		
DETAILED	D. SOWARDS	FEDERAL PROJECT	
CHECKED	J. COLVIN		
DATE	01/23/2008	STATE PROJECT	245-90-0061
SHEET			

SHEET NO. 6c

ADVANCE WARNING SIGN DURING ROAD CLOSURE

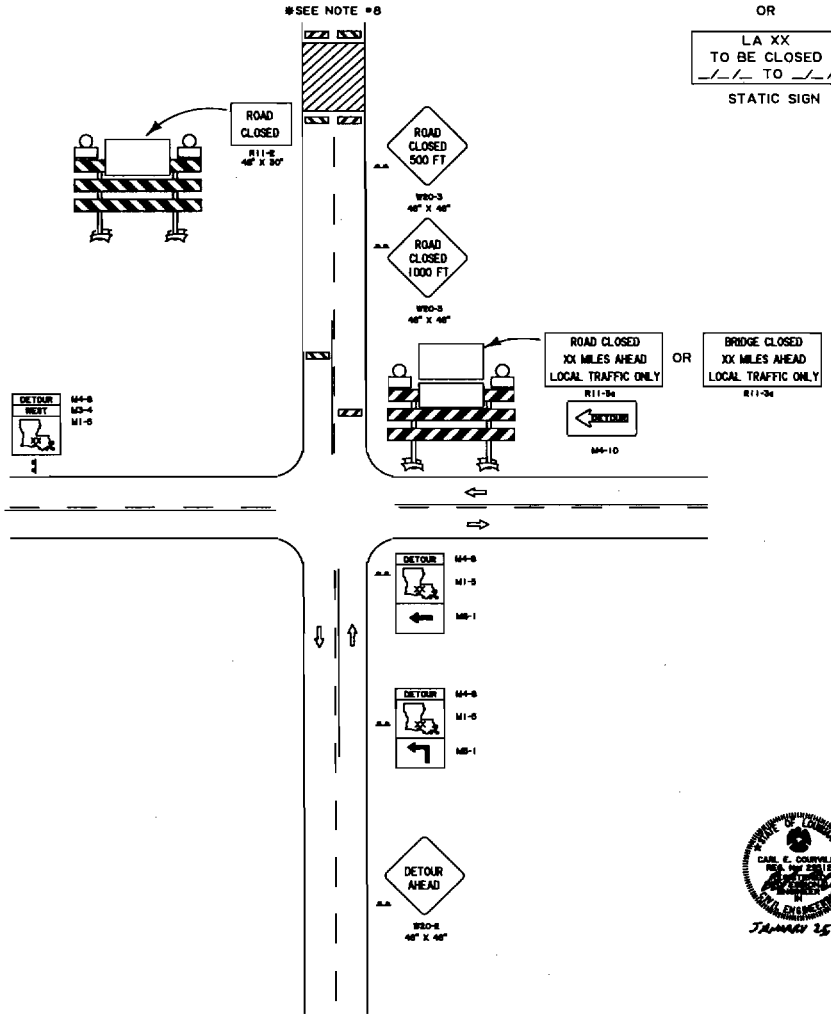

2 WEEKS PRIOR TO ROAD CLOSURE

SEE NOTES 9 AND 10

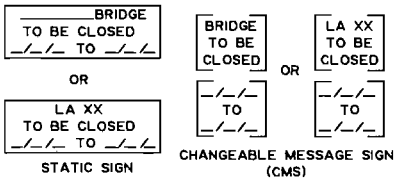

DURATION OF ROAD CLOSURE

SEE NOTES 9 AND 10

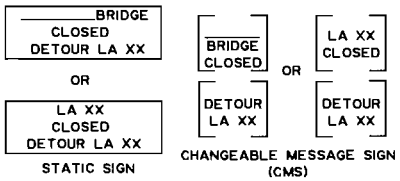

NOTES

THIS SHEET SHALL BE USED WITH THE "TEMPORARY TRAFFIC CONTROL GENERAL NOTES SHEET (TC-00)".

1. ANY SIGNS IN CONFLICT WITH DETOUR SIGNING SHALL BE REMOVED OR COVERED.
2. MINIMUM CONSTRUCTION SIGNING: ANY ADDITIONAL SIGNS SHOWN IN THE "MANUAL ON UNIFORM TRAFFIC CONTROL DEVICES" AND REQUIRED BY THE PROJECT ENGINEER SHALL BE INSTALLED UNDER ITEM 713-01.
3. ANY SIGN NOT APPLICABLE SHALL BE EITHER REMOVED OR COVERED.
4. STATIC OR CMS SIGNS SHALL BE PLACED 2 WEEKS PRIOR TO ROAD CLOSURE ON ALL APPROACHES TO THE CLOSURE.
5. STATIC OR CMS SIGNS SHALL BE PLACED ON ALL APPROACHES TO THE CLOSURE DURING THE DURATION OF THE ROAD BEING CLOSED.
6. DETOUR ROUTES SHALL ONLY BE STATE ROUTES, UNLESS AN AGREEMENT HAS BEEN MADE WITH THE ROAD OWNER.
7. NOT ALL DETOUR SIGNS ARE SHOWN.
8. THE SIGNING TO BE MIRRORED IN THE OPPOSITE DIRECTION.
9. MINIMUM LETTER SIZE ON STATIC SIGNS SHALL BE 8 INCHES FOR ADT'S LESS THAN 20,000. STATIC SIGNS ARE NOT ALLOWED FOR ADT'S GREATER THAN 20,000.
10. CHANGEABLE MESSAGE SIGNS (CMS) SHALL BE USED ON ALL INTERSTATE HIGHWAYS AND ON ALL OTHER ROADWAYS WITH AN ADT GREATER THAN 20,000 AND SHOULD BE DELINEATED WITH RETROREFLECTIVE TTC DEVICES. CMS WILL BE PAID FOR BY EACH.
11. THE DISTRICT TRAFFIC OPERATIONS ENGINEER SHALL APPROVE ALL DETOURS.
12. THE CONTRACTOR SHALL BE RESPONSIBLE FOR PLACING AND MAINTAINING ALL DETOUR SIGNS.

STATE OF LOUISIANA
CARL E. COURVILLE
REG. NO. 23815
LICENSED
PROFESSIONAL
ENGINEER
IN
CIVIL ENGINEERING
JANUARY 25 2008

TRAFFIC ENGINEERING	TRAFFIC CONTROL LAYOUT FOR ROAD CLOSURE			DESIGNED	E. COURVILLE	PARISH	TERREBONNE
				CHECKED	J. COLVIN		
				DETAILED	D. BOWARDS	FEDERAL PROJECT	
				CHECKED	J. COLVIN		
	TC-18	NO.	DATE	DATE SHEET	01/25/2008	STATE PROJECT	245-90-0061
			REVISION DESCRIPTION	BY			SHEET NO. 6d

ELECTRONIC COPY -- NOT FOR BID SUBMITTAL

ROUTE	STATE PROJECT	PARISH	SHEET NO.
LA.315	245-03-41	TERREBONNE	114

286

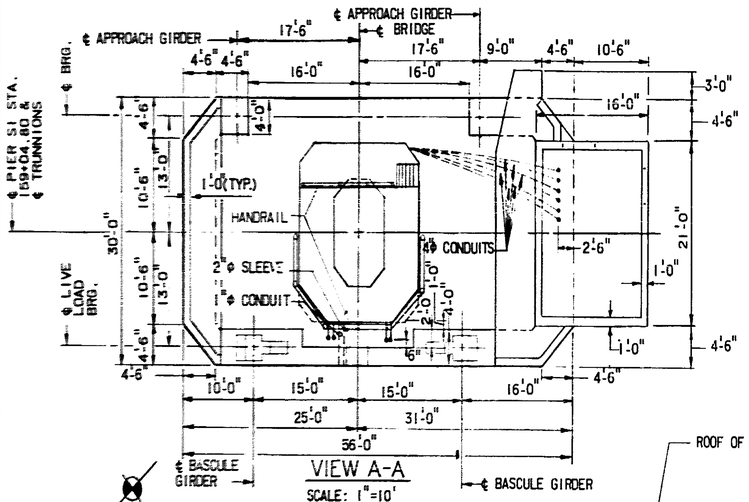

VIEW A-A

SCALE: 1"=10'

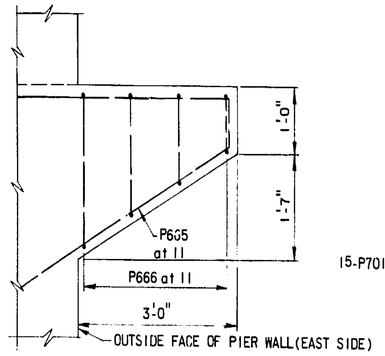

VIEW DD-DD

SCALE: 3/4"=1'-0"

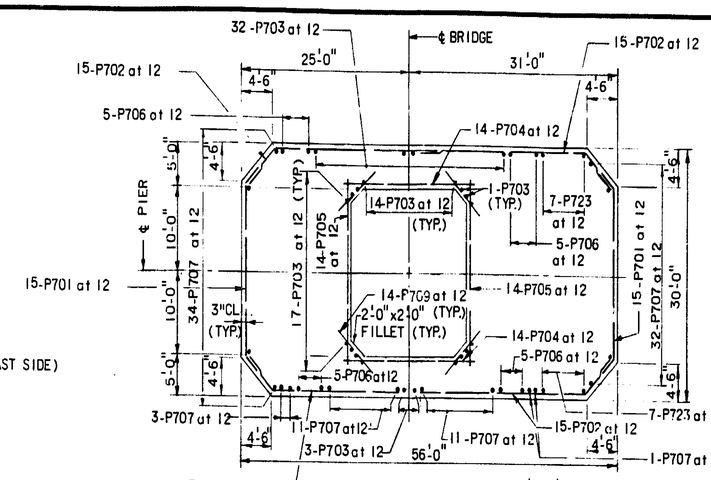

SECTION C-C & C'-C'

SCALE: 3/32"=1'-0"

NOTES:

FOR GENERAL NOTES, SEE DWG. NO. 105.
FOR BAR SCHEDULE, SEE DWG. NO. 137.
FOR ELECTRICAL DETAILS, SEE DWG. NOS. E1 TO E21.
FOR DRAINAGE DETAILS, SEE DWG. NO. 123.
FOR STAIRWAY DETAILS, SEE DWG. NO. 122.
FOR ADDITIONAL DETAILS, SEE DWG. NOS. 115, 116 & 117.
(T&B) INDICATES THAT NUMBER OF BARS AT BOTH THE TOP AND BOTTOM.
FOR ANCHOR BOLTS DETAILS, SEE DWG. NO. 113.
FOR LOCATION OF SECTIONS B-B' & C-C', SEE DWG. NO. 116.
FOR LOCATION OF SECTION DD-DD, SEE DWG. NO. 115.
LADDER, PLATFORM, FENDER & DOOR DETAILS ARE SIMILAR TO THOSE SHOWN FOR PIER N1.
REINFORCING CLEARANCE SHALL BE 3" FROM EL. +1.00 TO EL. +19.80 AND 2" ABOVE EL. +19.80.
LADDER, PLATFORM, STEPS & DOOR DETAILS ARE SIMILAR TO THOSE SHOWN FOR PIER N1.

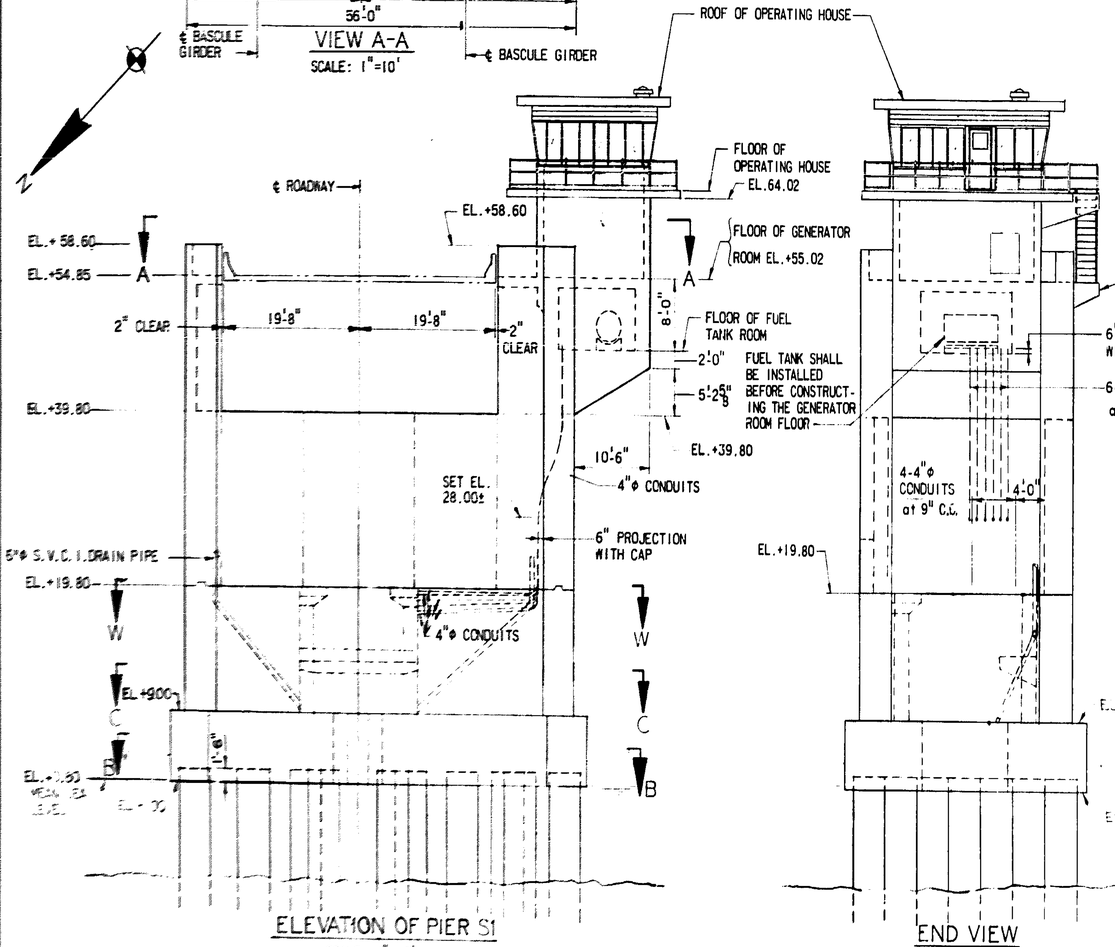

ELEVATION OF PIER S1

SCALE: 1"=10'

END VIEW

SCALE: 1"=10'

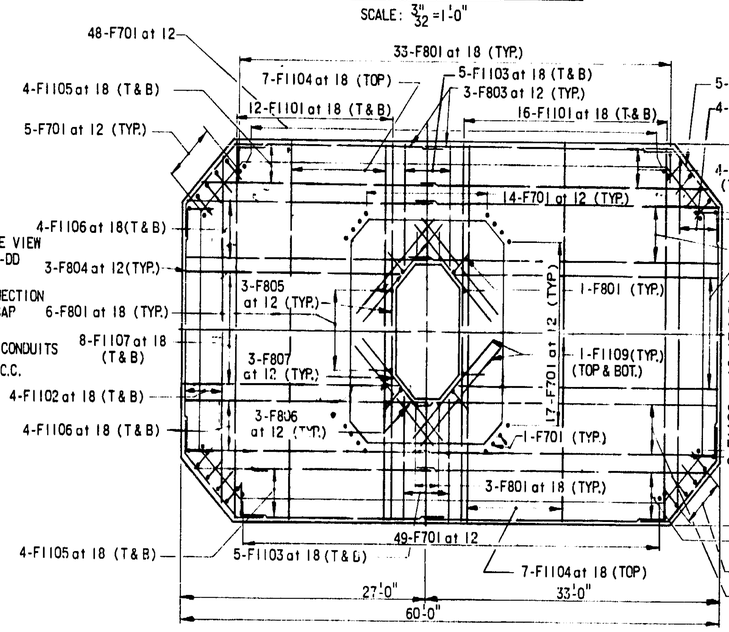

SECTION B-B

SCALE: 1/8"=1'-0"

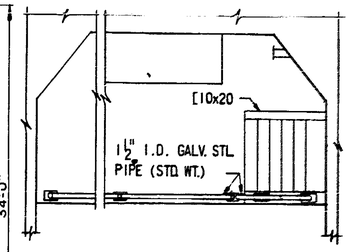

PLAN

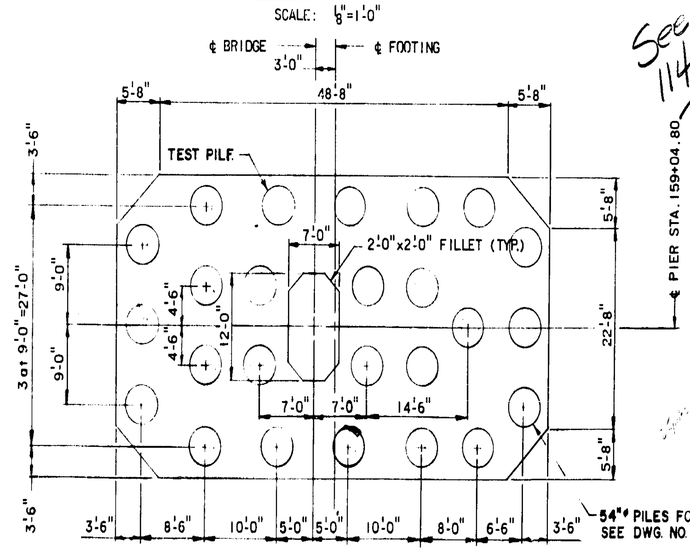

PILE LOCATION PLAN

SCALE: 1"=10'-0"

See Sheet 114A ATTACHED TO D.C.I.

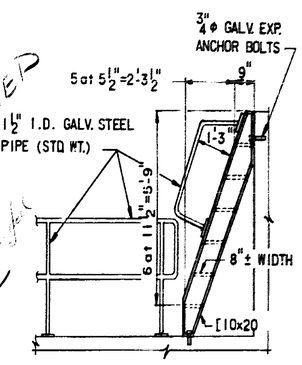

ELEVATION

STAIRWAY DETAILS TO EL. 13.00 PLATFORM

SCALE: 3/8"=1'-0"

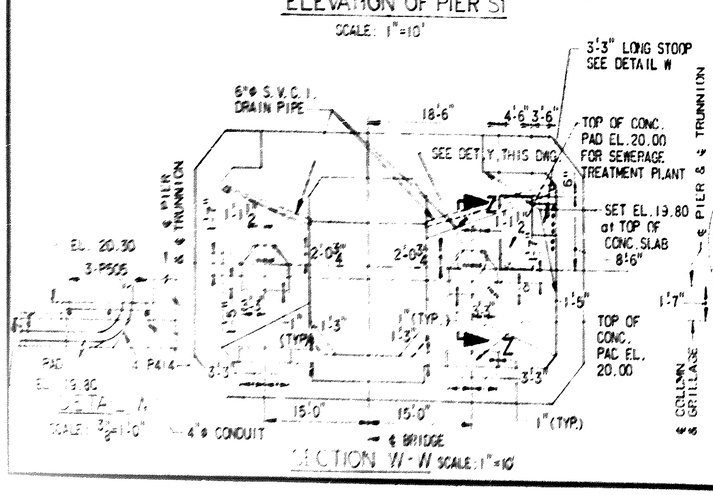

SECTION W-W SCALE: 1"=10'

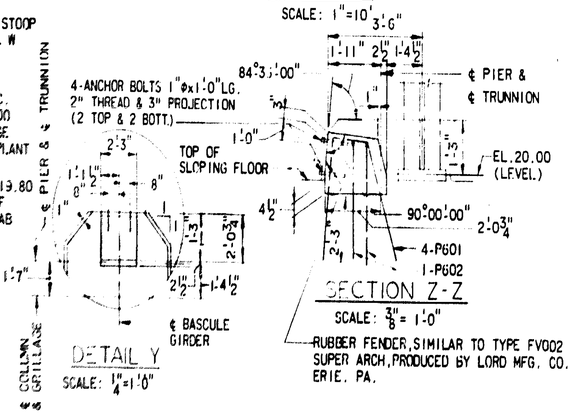

DETAIL Y

SCALE: 1/4"=1'-0"

SECTION Z-Z

SCALE: 3/8"=1'-0"

RUBBER FENDER, SIMILAR TO TYPE FV002 SUPER ARCH, PRODUCED BY LORD MFG. CO. ERIE, PA.

STATE OF LOUISIANA
DEPARTMENT OF HIGHWAYS

BASCULE PIER S1
DETAILS - 1

BAYOU DULARGE BRIDGE

MODJESKI AND MASTERS
CONSULTING ENGINEERS

DATE	DESCRIPTION	BY
	REVISIONS	

DATE: JAN. 1975 | SCALE: AS SHOWN | DWG. NO.: 114
DRAWN BY: CPR | CHKD. BY: BPS | IN CHARGE: TS | APPROVED:

AS BUILT

287

ROUTE	STATE PROJECT	PARISH	SHEET NO.
LA.315	245-03-41	TERREBONNE	115

NOTES:

FOR GENERAL NOTES, SEE DWG. NO. 105.
FOR LOCATION OF SECTION D-D & R-R, SEE DWG. NO. 116.
FOR SECTION DD-DD, SEE DWG. NO. 114.

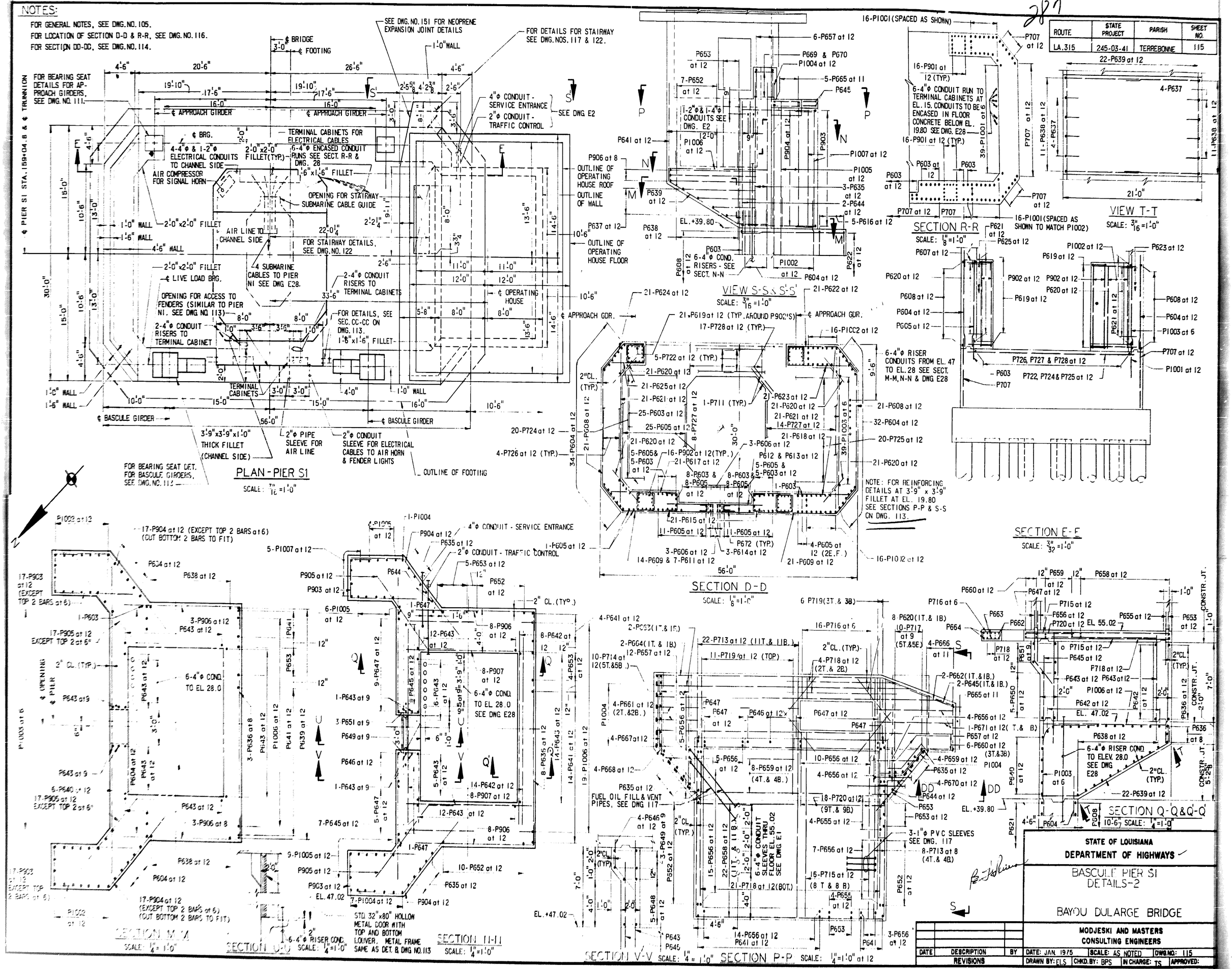

AS BUILT

ROUTE	STATE PROJECT	PARISH	SHEET NO.
LA.315	245-03-41	TERREBONNE	116

288

NOTES:

FOR GENERAL NOTES, SEE DWG. NO. 105.
FOR SECTIONS B'-B' & C'-C', SEE DWG. NO. 114.
FOR SECTIONS D-D, M-M, N-N, & P-P, SEE DWG. NO. 115.

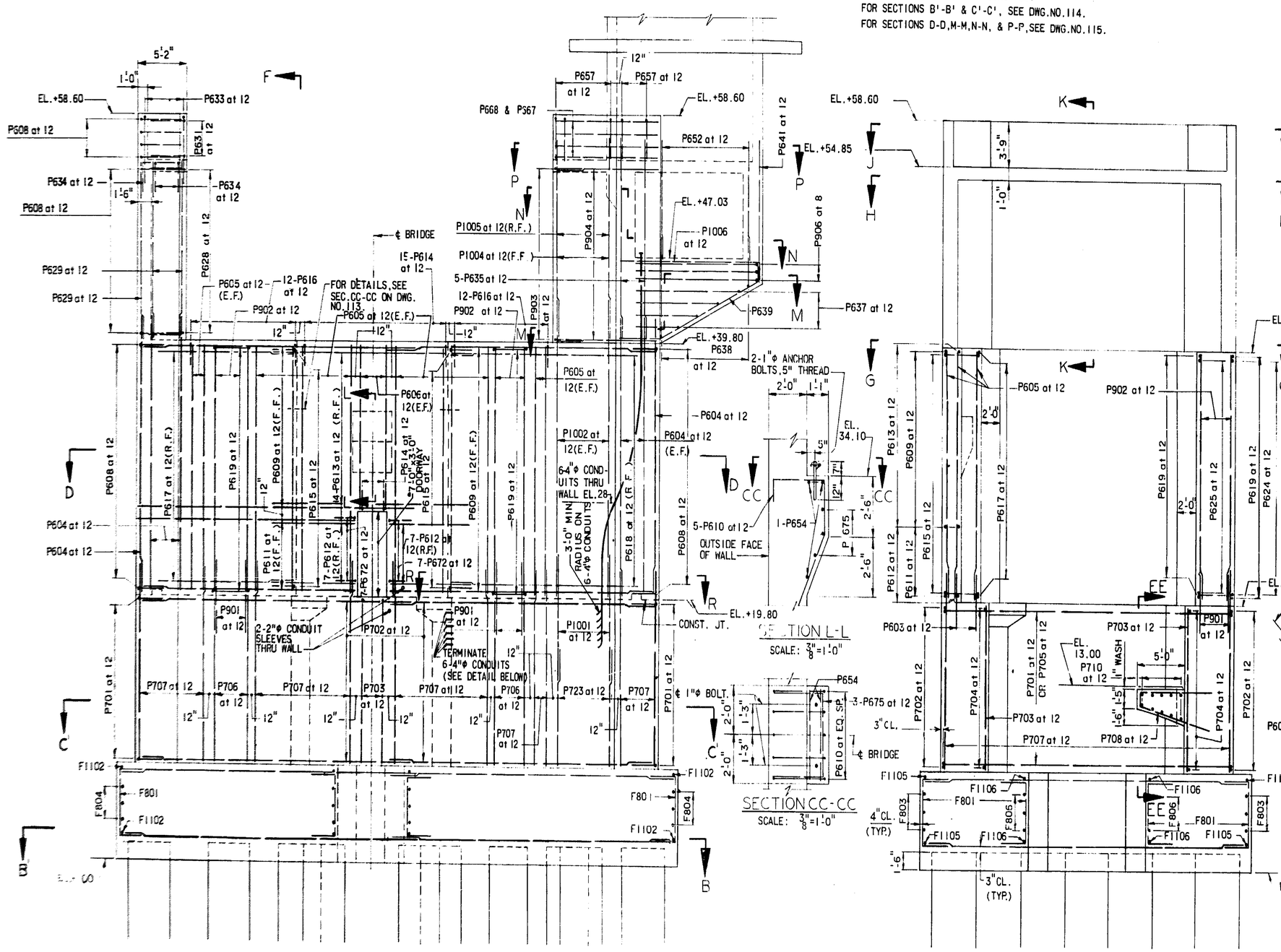

SECTION L-L
SCALE: 3/8"=1'-0"

SECTION CC-CC
SCALE: 3/8"=1'-0"

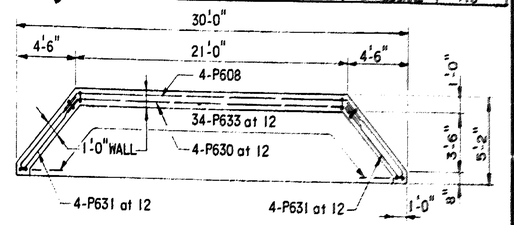

SECTION J-J
SCALE: 3/16"=1'-0"

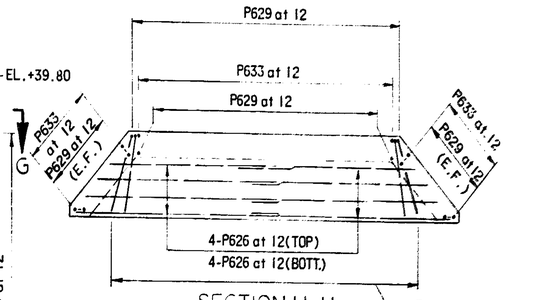

SECTION H-H
SCALE: 3/16"=1'-0"

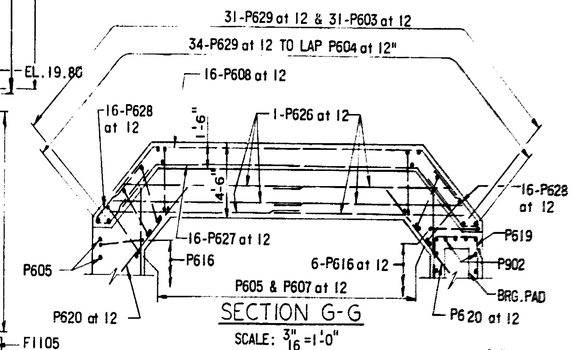

SECTION G-G
SCALE: 3/16"=1'-0"

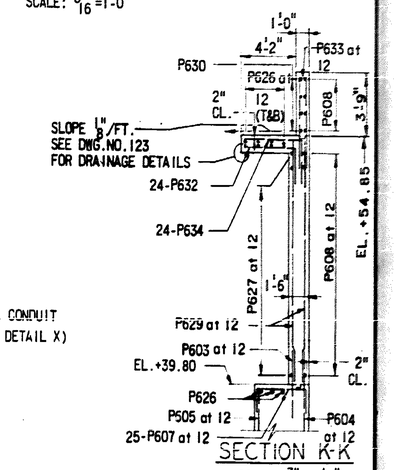

SECTION K-K
SCALE: 3/16"=1'-0"

ELEVATION-PIER S1
SCALE: 3/16"=1'-0"

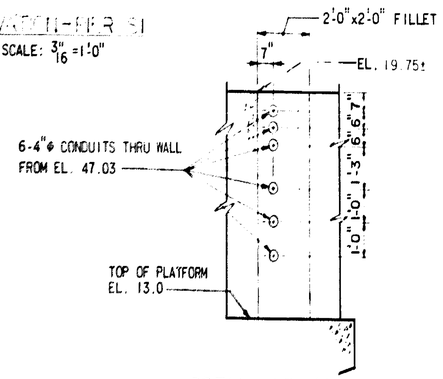

DETAIL OF 4"φ CONDUITS AT PLATFORM
SCALE: 3/8"=1'-0"

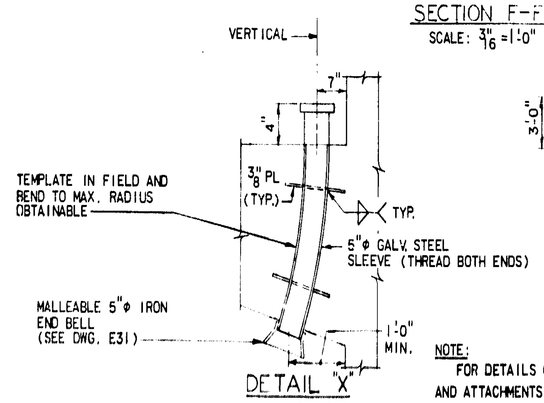

DETAIL "X"
SCALE: 3/4"=1'-0"

SECTION F-F
SCALE: 3/16"=1'-0"

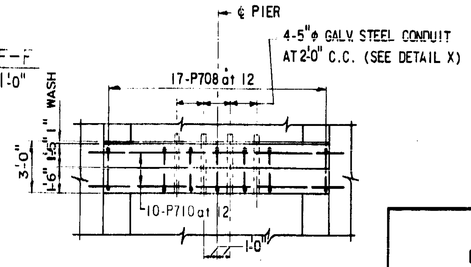

SECTION EE-EE
SCALE: 3/16"=1'-0"

NOTE:
FOR DETAILS OF SUBMARINE CABLE AND ATTACHMENTS, SEE DWGS. NO. E28 THRU E31.

DATE	DESCRIPTION	BY
	REVISIONS	

STATE OF LOUISIANA
DEPARTMENT OF HIGHWAYS

BASCULE PIER S1
DETAILS - 3

BAYOU DULARGE BRIDGE

MODJESKI AND MASTERS
CONSULTING ENGINEERS

DATE: JAN. 1975 | SCALE: AS SHOWN | DWG. NO.: 116
DRAWN BY: CPR | CHKD. BY: BPS | IN CHARGE: TS | APPROVED:

AS BUILT

ROUTE	STATE PROJECT	PARISH	SHEET NO.
LA. 315	245-03-41	TERREBONNE	117

289

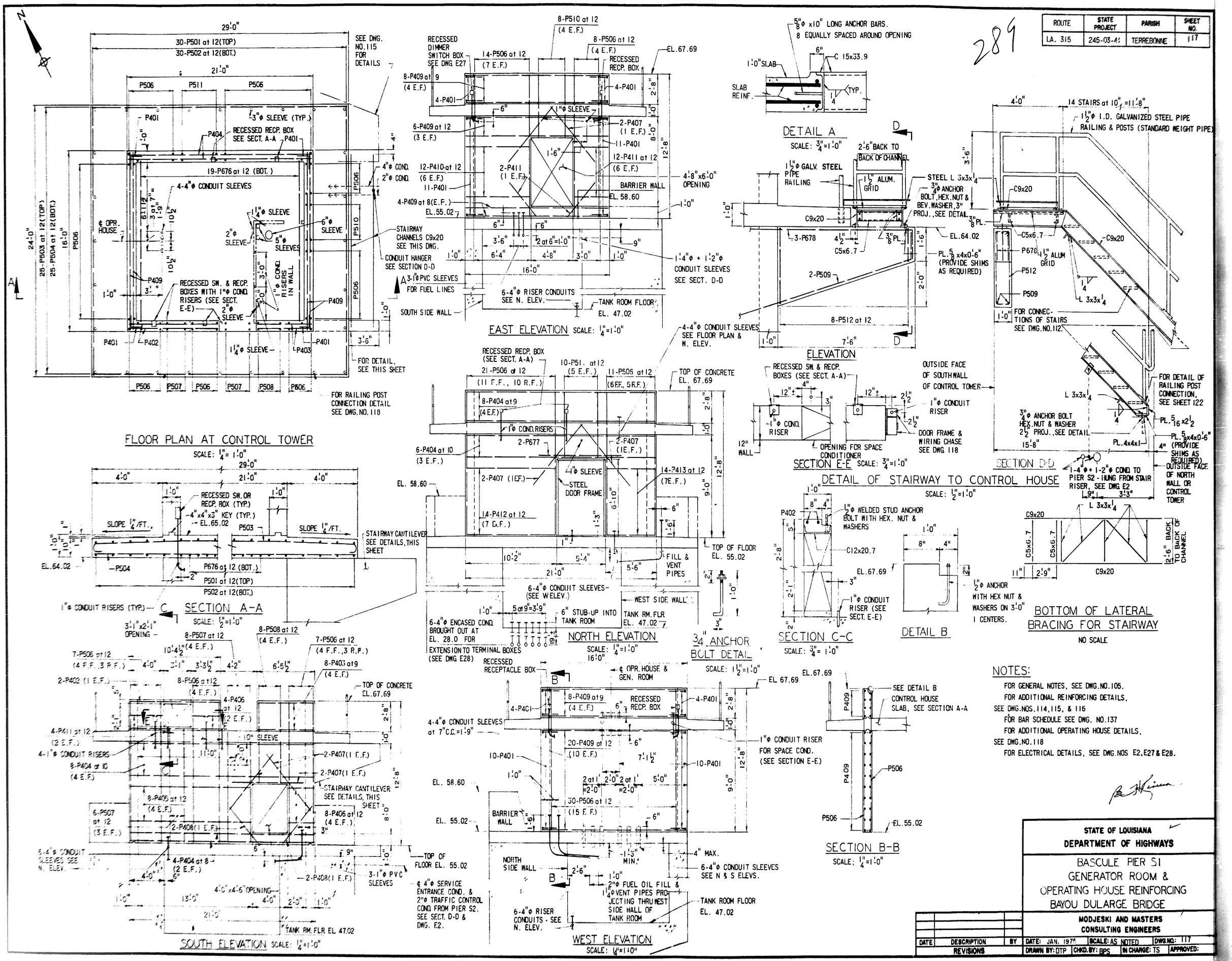

NOTES:

FOR GENERAL NOTES, SEE DWG. NO. 105.
FOR ADDITIONAL REINFORCING DETAILS, SEE DWG. NOS. 114, 115, & 116
FOR BAR SCHEDULE SEE DWG. NO. 137
FOR ADDITIONAL OPERATING HOUSE DETAILS, SEE DWG. NO. 118
FOR ELECTRICAL DETAILS, SEE DWG. NOS E2, E27 & E28.

STATE OF LOUISIANA
DEPARTMENT OF HIGHWAYS

BASCULE PIER S1
GENERATOR ROOM &
OPERATING HOUSE REINFORCING
BAYOU DULARGE BRIDGE

MODJESKI AND MASTERS
CONSULTING ENGINEERS

DATE	DESCRIPTION	BY
	REVISIONS	

DATE: JAN. 1975 | SCALE: AS NOTED | DWG. NO.: 117
DRAWN BY: DTP | CHKD. BY: BPS | IN CHARGE: TS | APPROVED:

AS BUILT

ROUTE	STATE PROJECT	PARISH	SHEET NO.
LA. 315	245-03-41	TERREBONNE	118

290

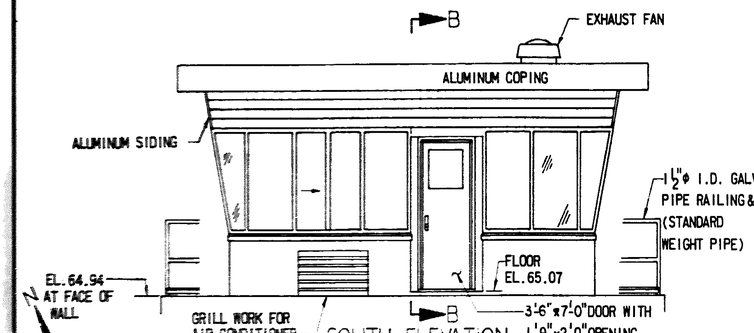

SOUTH ELEVATION
(NORTH ELEVATION SIMILAR)
(SCALE: 1/4"= 1'-0")

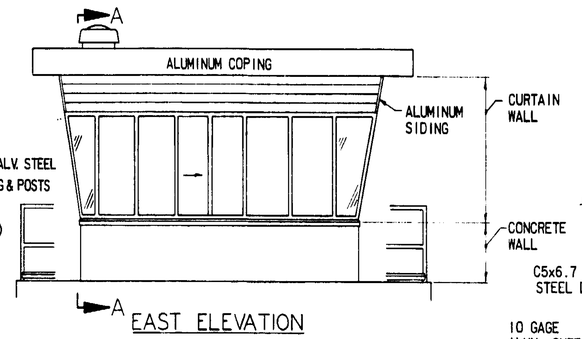

EAST ELEVATION
(WEST ELEVATION SIMILAR)
(SCALE: 1/4"= 1'-0")

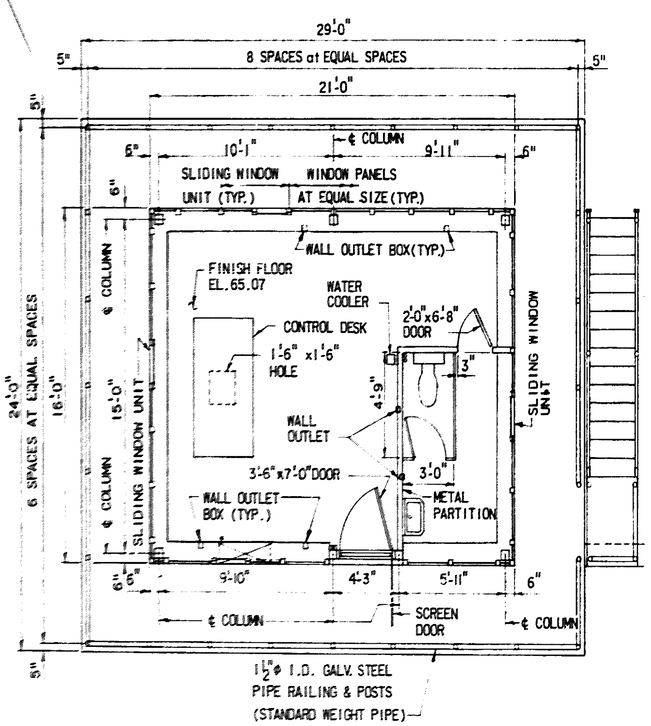

FLOOR PLAN
(SCALE: 1/4"= 1'-0")

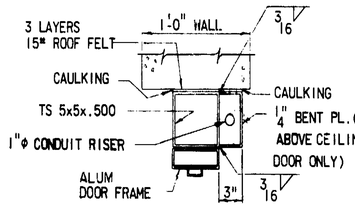

DETAIL OF EXTERIOR DOOR FRAME
SCALE: 1½"= 1'-0"

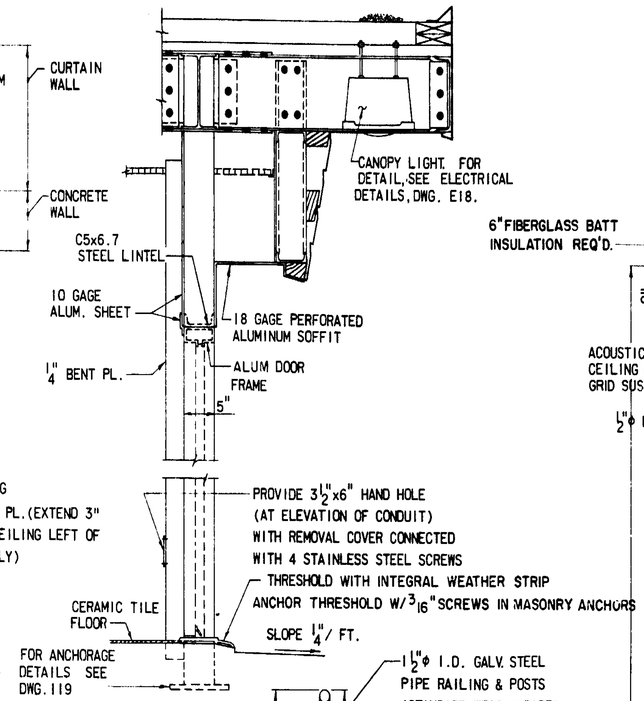

SECTION B-B
SCALE: 1"=1'-0"

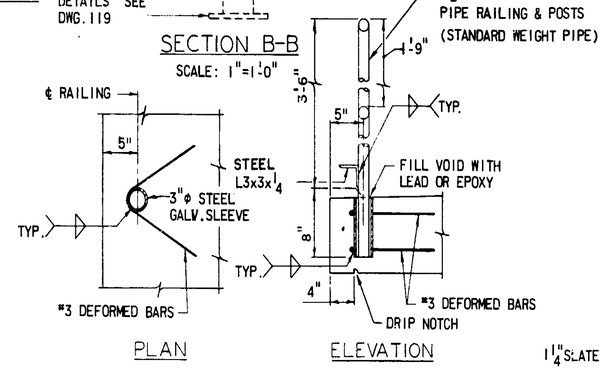

RAILING POST CONNECTION
SCALE: 1"= 1'-0"

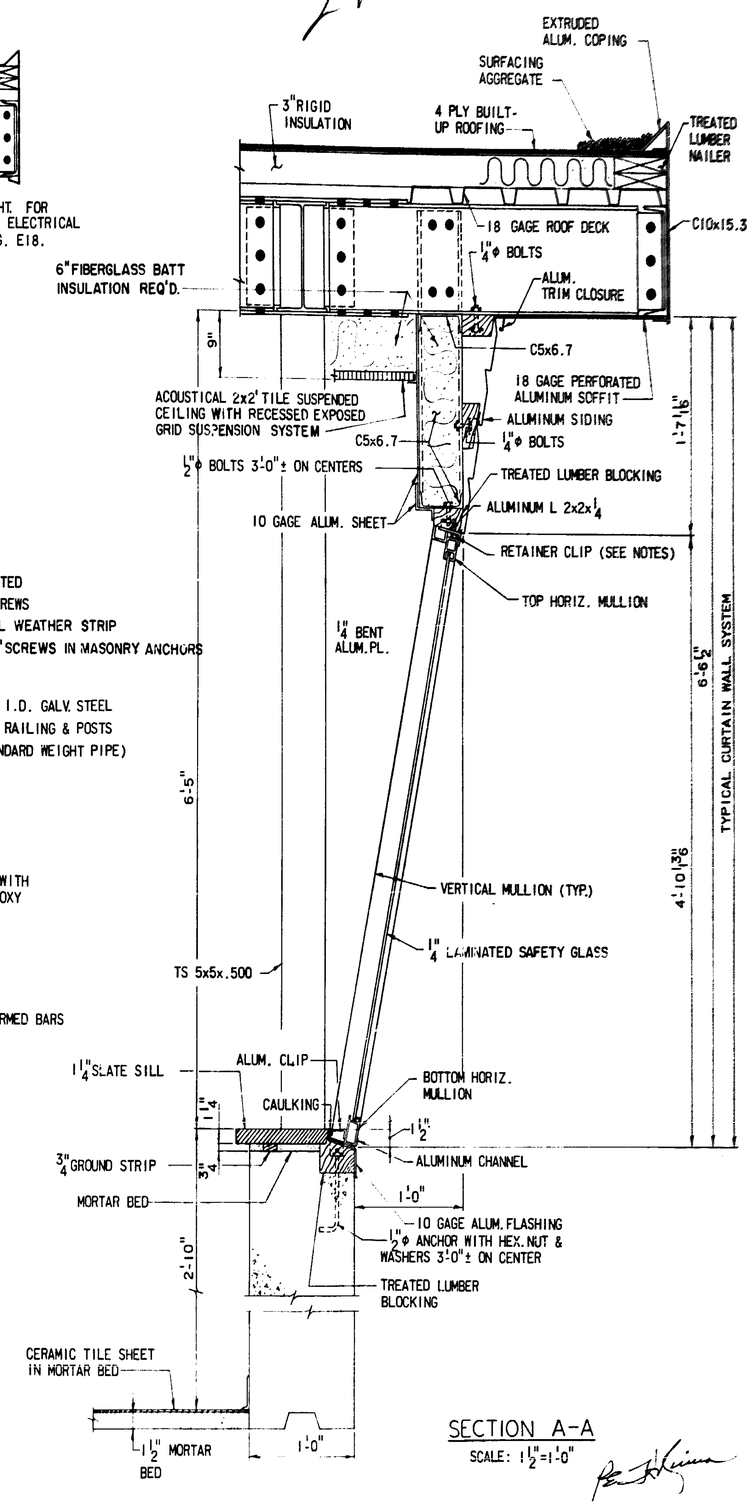

SECTION A-A
SCALE: 1½"=1'-0"

FINISH SCHEDULE

NO.	ITEM	FINISH & COLOR
1	EXTRUDED ALUM. COPING	ANODIZED CLEAR
2	18 GAGE PERFORATED SOFFIT	BAKED ENAMEL WHITE
3	ALUM. SIDING, TRIM & FLASHING	BAKED ENAMEL LIGHT GREEN
4	10 GAGE ALUM. FLASHING	BAKED ENAMEL LIGHT GREEN
5	10 GAGE INTERIOR ALUM. SHEET	BAKED ENAMEL LIGHT GREEN
6	SLATE SILL	HONED GRAY BLACK
7	INTERIOR CONCRETE WALL	EPOXY PAINT LIGHT GREEN
8	CERAMIC TILE	NON-SLIP FINISH, BLENDED SHADES OF GREEN
9	EXPOSED STEEL FRAMING	PAINT LIGHT GREEN
10	METAL PARTITIONS	BAKED ENAMEL LIGHT GREEN

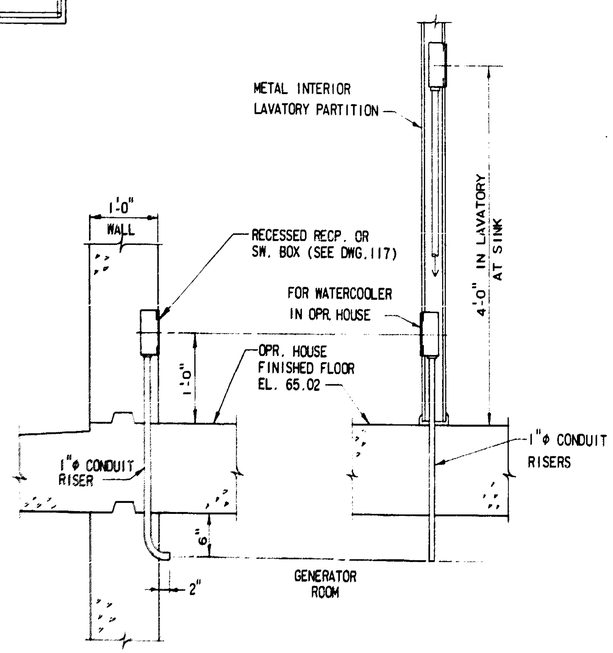

TYPICAL RECESSED BOX ARRANGEMENTS
SCALE; 1"=1'-0"

NOTES:

FOR GENERAL NOTES SEE DWG. NO. 105
ALUMINUM WINDOWS SHALL BE SO CONSTRUCTED TO PROVIDE FOR DIFFERENTIAL MOVEMENT BETWEEN THE STEEL ROOF FRAMING AND THE WINDOW UNITS.
CAULKING MATERAL TO BE GE SILICONE 1300 SERIES THROUGHOUT.
CONCRETE WALLS IN OPERATOR'S HOUSE WILL BE MEASURED & PAID UNDER ITEM 805(8).

STATE OF LOUISIANA
DEPARTMENT OF HIGHWAYS

OPERATING HOUSE DETAIL-1

BAYOU DULARGE

MODJESKI AND MASTERS
CONSULTING ENGINEERS

DATE	DESCRIPTION	BY
	REVISIONS	

DATE: JAN. 1975 | SCALE: AS NOTED | DWG. NO.: 118
DRAWN BY: DTP | CHKD. BY: CWH | IN CHARGE: TS | APPROVED:

AS BUILT

ROUTE	STATE PROJECT	PARISH	SHEET NO.
LA.315	245-03-41	TERREBONNE	119

291

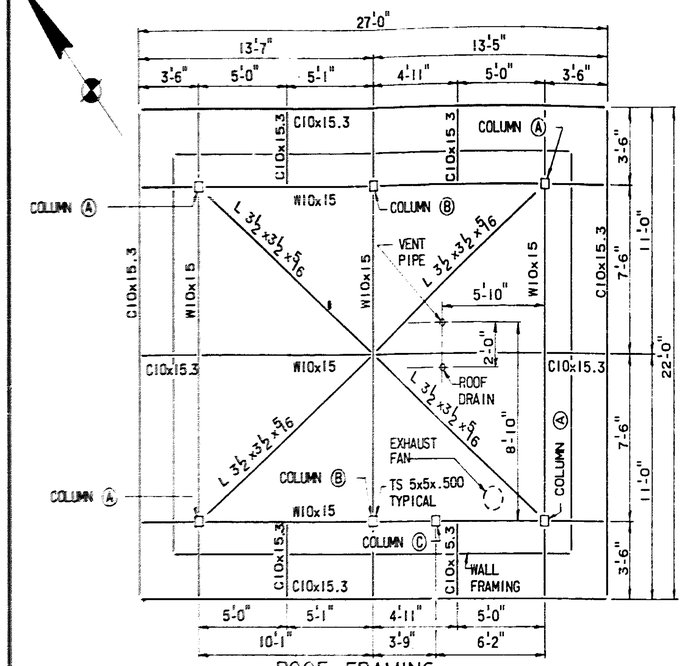

ROOF FRAMING

SCALE: 1/4" = 1'-0"

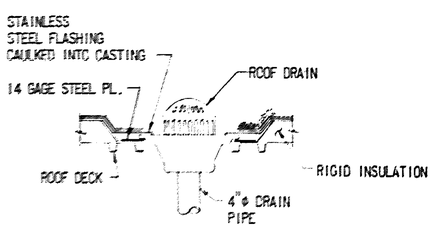

ROOF DRAIN DETAIL

SCALE: 1" = 1'-0"

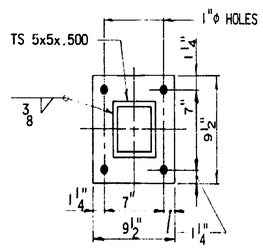

BASE PLATE DETAIL

SCALE: 1 1/2" = 1'-0"

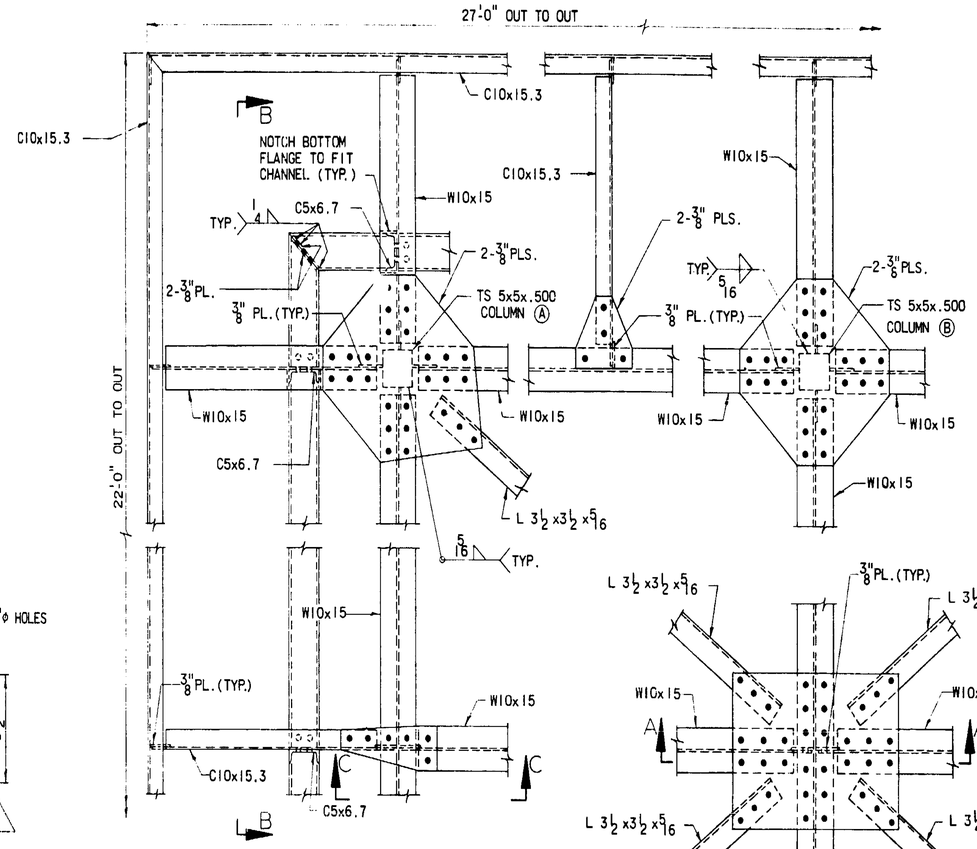

ROOF FRAMING DETAILS

SCALE: 1" = 1'-0"

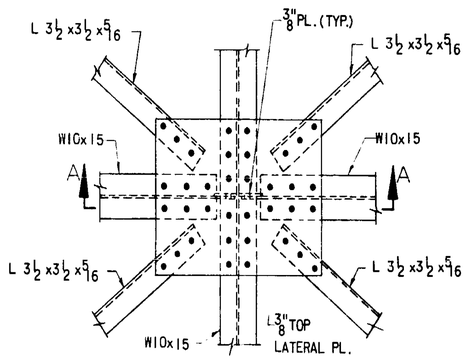

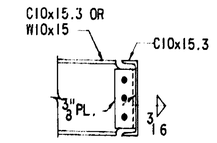

TYPICAL FASCIA CONNECTION

SCALE: 1" = 1'-0"

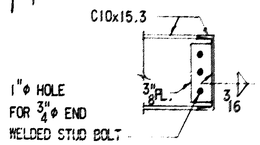

TYPICAL CORNER CONNECTION

SCALE: 1" = 1'-0"

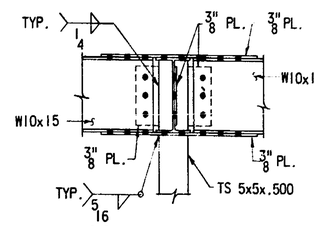

COLUMN DETAIL

SCALE: 1" = 1'-0"

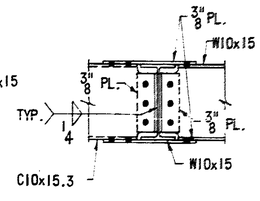

SECTION C-C

SCALE: 1" = 1'-0"

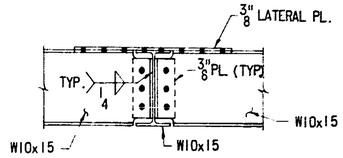

SECTION A-A

SCALE: 1" = 1'-0"

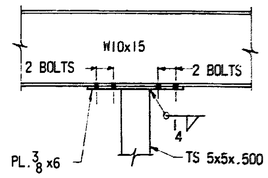

DETAIL AT TOP OF COLUMN C

SCALE: 1" = 1'-0"

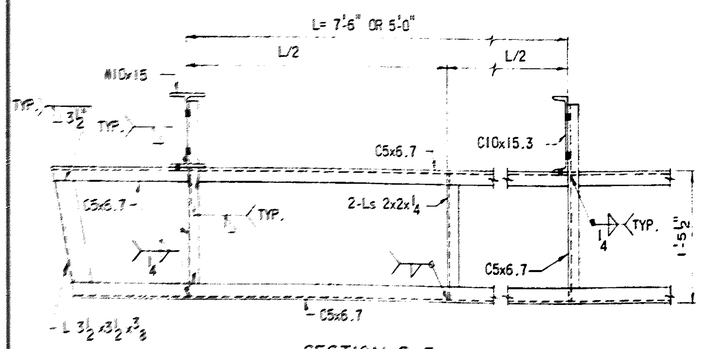

SECTION B-B

SCALE: 1" = 1'-0"

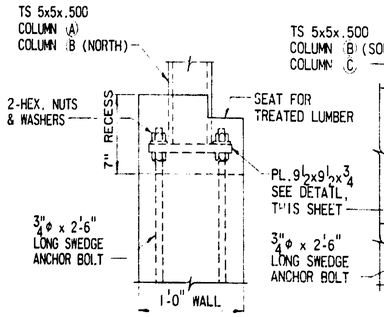

ANCHOR ASSEMBLY AT COLUMN

SCALE: 1 1/2" = 1'-0"

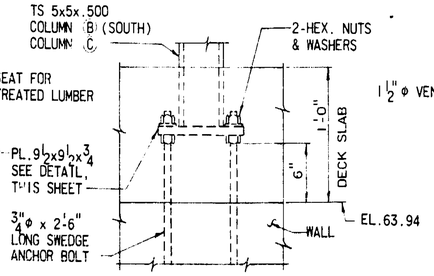

ANCHOR ASSEMBLY AT DOOR

SCALE: 1 1/2" = 1'-0"

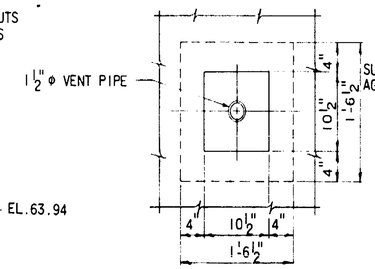

PLAN

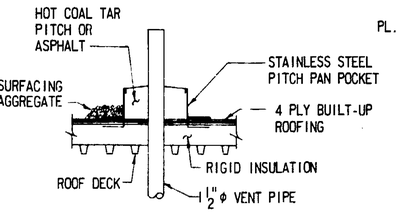

ELEVATION

VENT PIPE DETAIL

SCALE: 1" = 1'-0"

NOTES:

FOR GENERAL NOTES, SEE DWG. NO. 105

ALL STRUCTURAL STEEL SHALL BE ASTM A36

ALL FASTENERS SHALL BE 3/4"φ A325 BOLTS.

STATE OF LOUISIANA
DEPARTMENT OF HIGHWAYS

OPERATING HOUSE DETAIL-2

BAYOU DULARGE BRIDGE

MODJESKI AND MASTERS
CONSULTING ENGINEERS

DATE	DESCRIPTION	BY
	REVISIONS	

DATE: JAN. 1975 | SCALE: AS NOTED | DWG.NO.: 119
DRAWN BY: DTP | CHKD.BY: CWH | IN CHARGE: TS | APPROVED:

AS BUILT

ROUTE	STATE PROJECT	PARISH	SHEET NO.
LA. 315	245-03-41	TERREBONNE	171

343

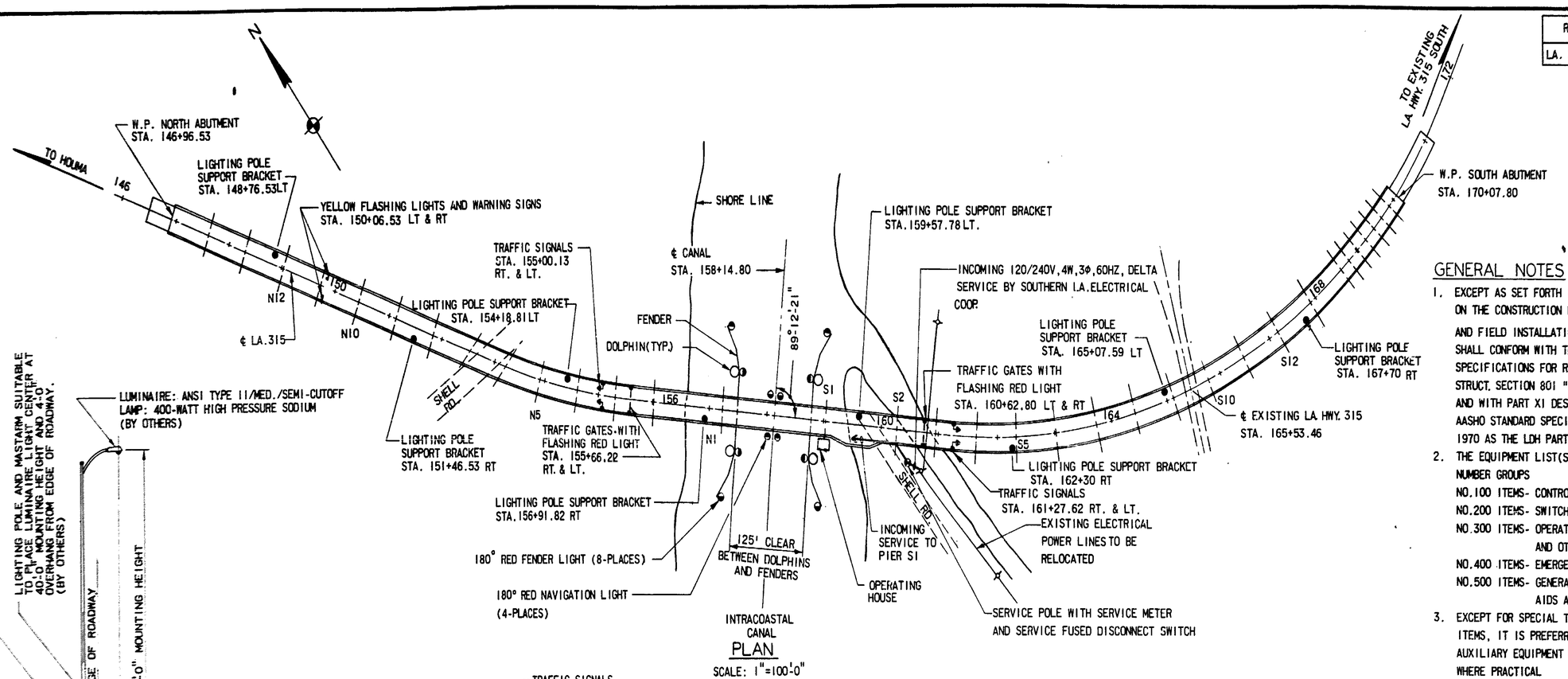

PLAN

SCALE: 1"=100'-0"

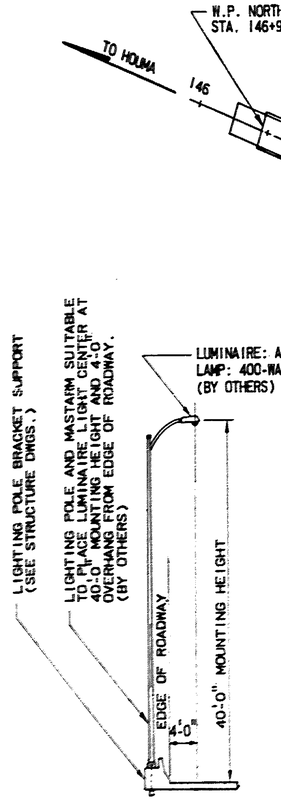

TYPICAL

LIGHTING POLE ASSEMBLY

SCALE: 1"=10'-0"

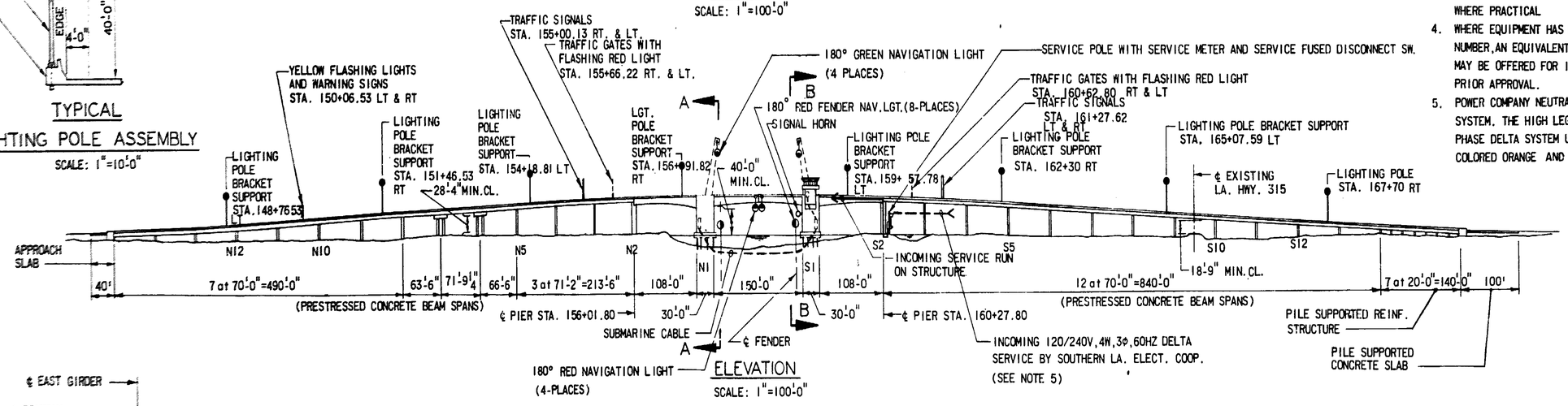

ELEVATION

SCALE: 1"=100'-0"

GENERAL NOTES

1. EXCEPT AS SET FORTH IN THE SPECIAL PROVISION AND/OR SPECIFIED ON THE CONSTRUCTION PLANS, THE DESIGN, WORKING DRAWINGS AND FIELD INSTALLATIONS FOR THE BASCULE SPAN POWER PLANT SHALL CONFORM WITH THE APPLICABLE PORTIONS OF LDH STANDARD SPECIFICATIONS FOR ROADS AND BRIDGES DATED OCTOBER 1971 PART VIII-STRUCT. SECTION 801 "GENERAL" AND SECTION 809 "MOVABLE BRIDGES"; AND WITH PART XI DESIGN OF MOVABLE BRIDGES WHICH ADOPTS THE AASHO STANDARD SPECIFICATIONS FOR MOVABLE HIGHWAY BRIDGES-1970 AS THE LDH PART XI STANDARD.
2. THE EQUIPMENT LIST(S) IS DIVIDED INTO THE FOLLOWING FIVE ITEM NUMBER GROUPS
   - NO.100 ITEMS- CONTROL DESK (DWG. E20).
   - NO.200 ITEMS- SWITCH BOARD (DWG. E21).
   - NO.300 ITEMS- OPERATING EQUIPMENT DEVICES, WIRING SYSTEMS AND OTHER RELATED MATERIAL.(DWG. E22 & E23).
   - NO.400 ITEMS- EMERGENCY POWER PROVISIONS (DWG. E23).
   - NO.500 ITEMS- GENERAL LIGHT AND POWER EQUIPMENT, NAVIGATION AIDS AND OTHER MISCELLANEOUS. (DWG. E24).
3. EXCEPT FOR SPECIAL TYPE EQUIPMENT AND OR UNIT ASSEMBLY TYPE ITEMS, IT IS PREFERRED THAT THE SPECIFIED POWER, CONTROL AND AUXILIARY EQUIPMENT BE THE PRODUCT OF A SINGLE MANUFACTURER WHERE PRACTICAL
4. WHERE EQUIPMENT HAS BEEN SPECIFIED BY A MANUFACTURER'S NUMBER, AN EQUIVALENT PRODUCT OF ANOTHER MANUFACTURER MAY BE OFFERED FOR INSTALLATION, SUBJECT TO THE ENGINEER'S PRIOR APPROVAL.
5. POWER COMPANY NEUTRAL SHALL BE COLORED GRAY THROUGHOUT THE SYSTEM. THE HIGH LEG OF THE 120/240 VOLT, FOUR-WIRE, THREE PHASE DELTA SYSTEM USED IN THIS ELECTRICAL SYSTEM SHALL BE COLORED ORANGE AND DESIGNATED PHASE B.

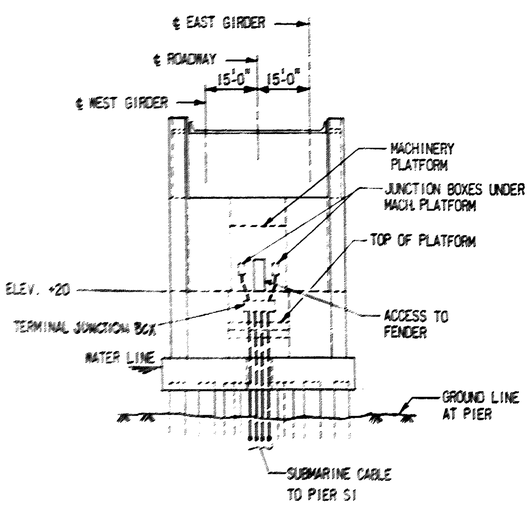

SECTION A-A (PIER N1)

NO SCALE

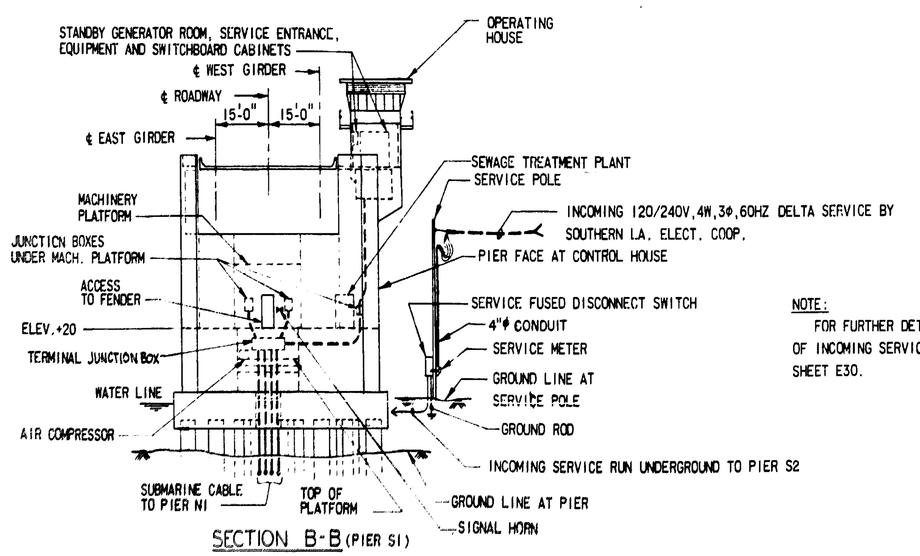

SECTION B-B (PIER S1)

NO SCALE

NOTE:
FOR FURTHER DETAILS
OF INCOMING SERVICE SEE
SHEET E30.

E1

STATE OF LOUISIANA
DEPARTMENT OF HIGHWAYS

ELECTRICAL SYSTEM
GENERAL PLAN & ELEVATION
BAYOU DULARGE BRIDGE

MODJESKI AND MASTERS
CONSULTING ENGINEERS

DATE	DESCRIPTION	BY
	REVISIONS	

DATE: 7-16-74 | SCALE: AS NOTED | DWG.NO.: 171
DRAWN BY: GAS | CHKD.BY: JMS | IN CHARGE: TS | APPROVED:

ROUTE	STATE PROJECT	PARISH	SHEET NO.
LA 315	245-03-41	TERREBONNE	172

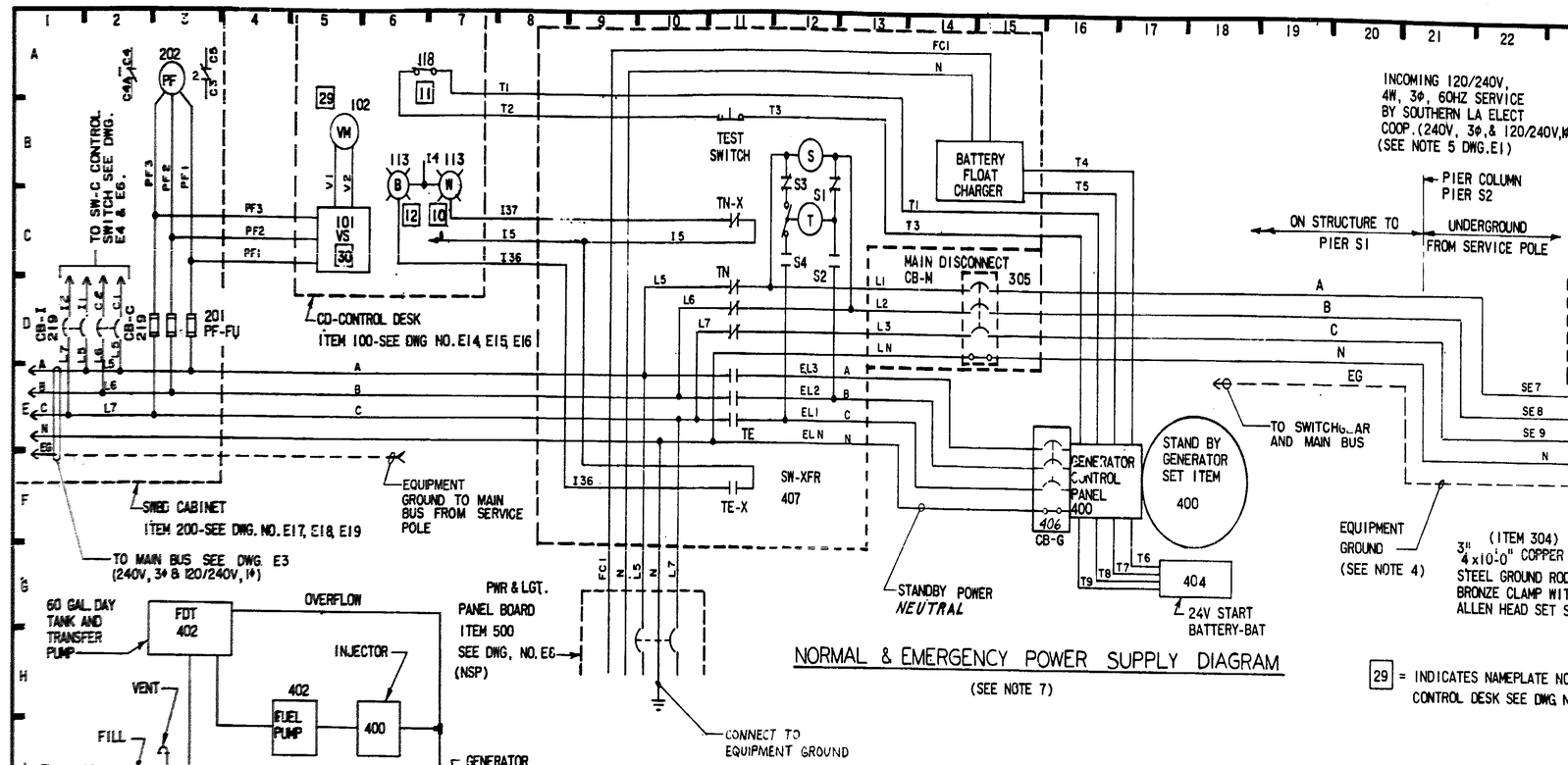

NORMAL & EMERGENCY POWER SUPPLY DIAGRAM

(SEE NOTE 7)

29 = INDICATES NAMEPLATE NO. ON CONTROL DESK SEE DWG NO. E14.

NOTES: 344

1. SERVICE POLE SHALL BE CLASS 5 SOUTHERN PINE CREOSOTED TO 12# PER CU. FT. FINAL RETENTION, LENGTH AND LOCATION DETERMINED BY THE ENGINEER
2. ALL METERING EQUIPMENT SHALL BE FURNISHED AND INSTALLED AS SPECIFIED BY THE SOUTHERN LA ELECT COOP.
3. FUEL SYSTEM PIPING SHALL BE AS RECOMMENDED BY THE GENERATOR MANUFACTURER.
4. CONTINUOUS EQUIPMENT GROUNDING SHALL BE PROVIDED THROUGHOUT THE ENTIRE ELECTRICAL SYSTEM UTILIZING THE CONDUIT SYSTEM.
5. FOR ADDITIONAL GENERATOR ROOM DETAILS SEE DWG. NO. E27)
6. ALL EQUIPMENT ASSOCIATED WITH THE STAND BY GENERATOR SET INCLUDING ITEM 400, 401, 402, 403, 404, & 407, SHALL BE OF ONE MANUFACTURER.
7. ITEM 407 & 305 SHALL BE SEPARATELY MOUNTED ON THE GENERATOR ROOM WALL IN NEMA 1, ENCLOSURES
8. CONDUIT SHALL NOT BE RUN ACROSS THE FLOOR OF THE GENERATOR ROOM
9. A LEAD SHIM 1/32 THK IS REQUIRED BETWEEN ALL ELECTRICAL EQUIPMENT AND CONCRETE.
10. ALL WIRES ENTERING CONTROL DESK, SWITCHBOARD, CABINETS AND JUNCTION BOXES SHALL BE PLACED IN NEAT COMPACT WELL SUPPORTED BUNDLES, FROM CONDUIT EXIT TO TERMINAL POINT WITH NYLON CABLE TIES & STRAPS OR APPROVED EQUAL.

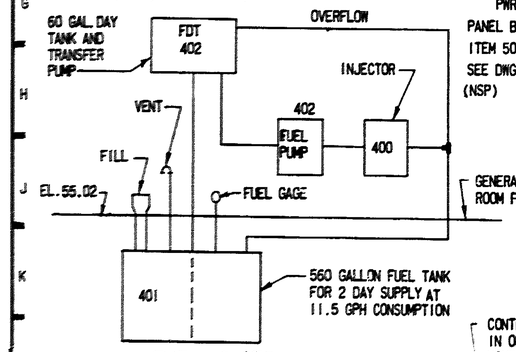

FUEL SYSTEM LAYOUT

SCALE: NONE

(SEE NOTE 3 & 6)

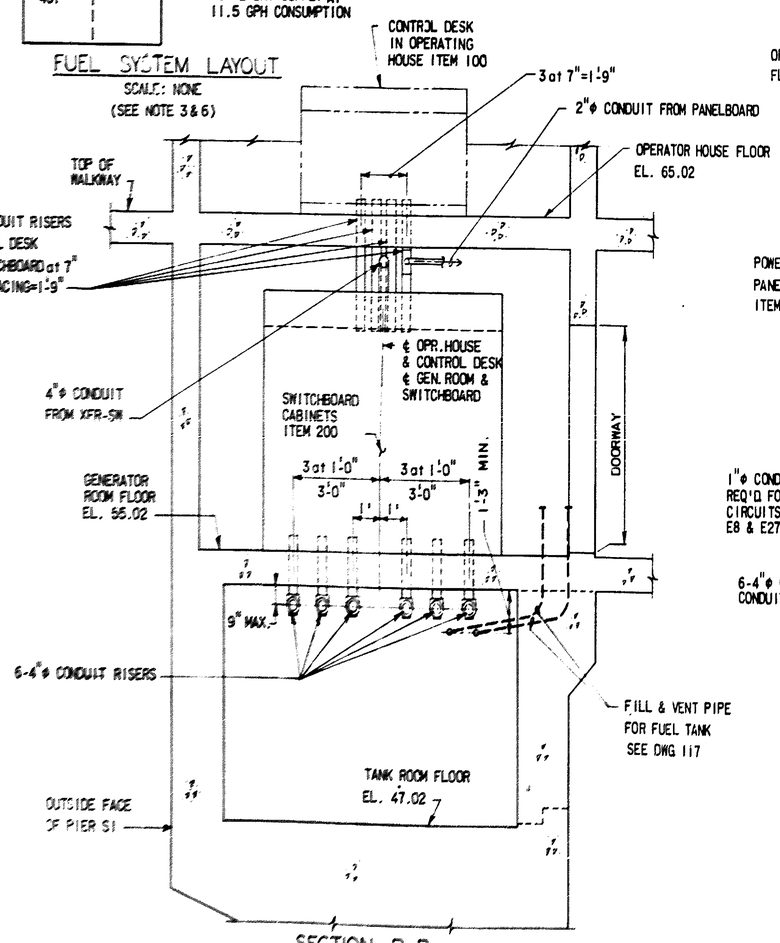

SECTION B-B

SCALE: 3/8" = 1'-0"

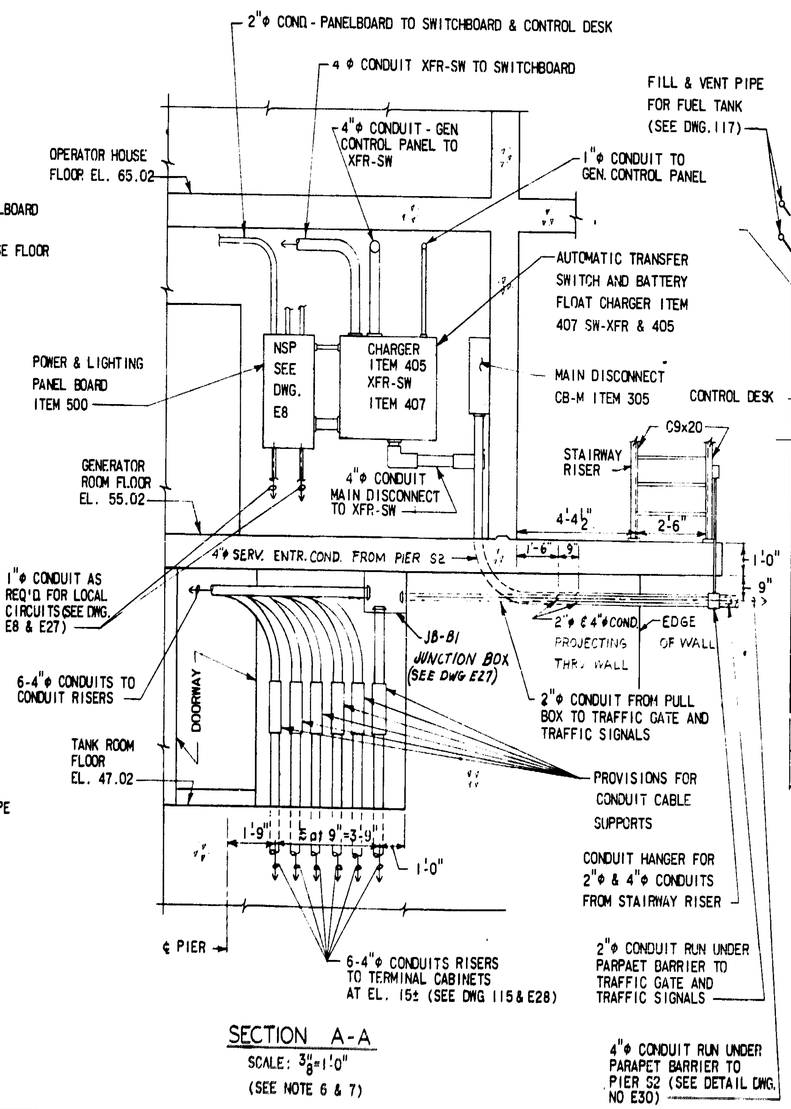

SECTION A-A

SCALE: 3/8" = 1'-0"

(SEE NOTE 6 & 7)

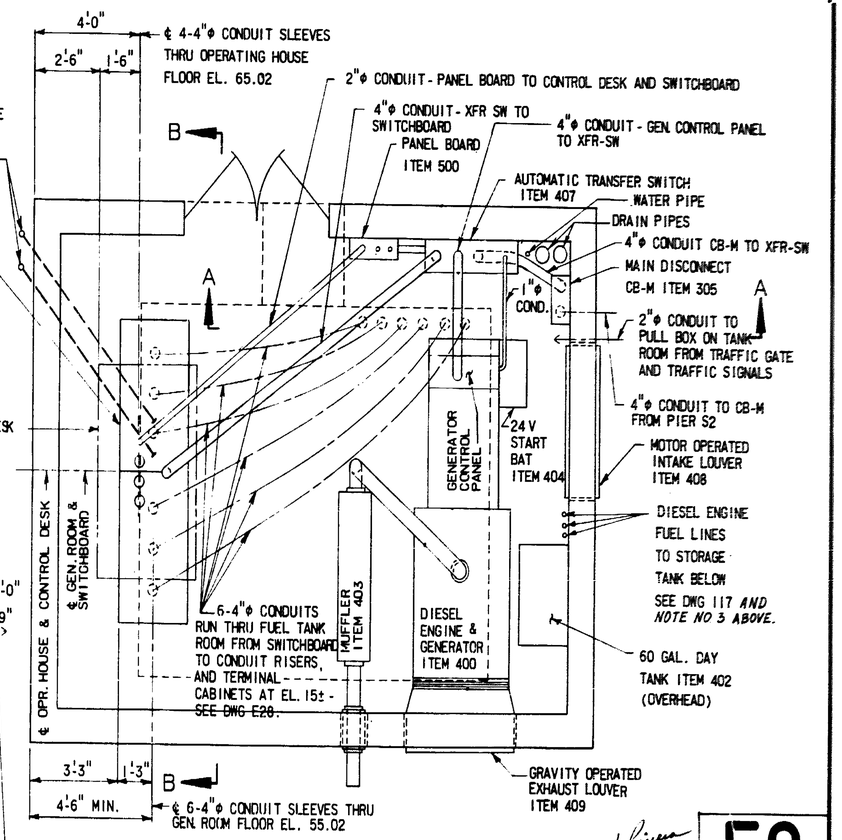

GENERATOR ROOM CONDUIT & EQUIPMENT LAYOUT

SCALE: 3/8" = 1'-0"

(SEE NOTE 6 & 7)

E2

STATE OF LOUISIANA
DEPARTMENT OF HIGHWAYS

ELECTRICAL SYSTEM
NORMAL & STANDBY POWER SUPPLY
BAYOU DULARGE BRIDGE

MODJESKI AND MASTERS
CONSULTING ENGINEERS

DATE	DESCRIPTION	BY
	REVISIONS	

DATE: 10-30-74 | SCALE: AS NOTED | DWG.NO.: 172
DRAWN BY: GAS | CHKD.BY: HAE | IN CHARGE: TS | APPROVED:

ROUTE	STATE PROJECT	PARISH	SHEET NO.
LA. 315	245-03-41	TERREBONNE	173

345

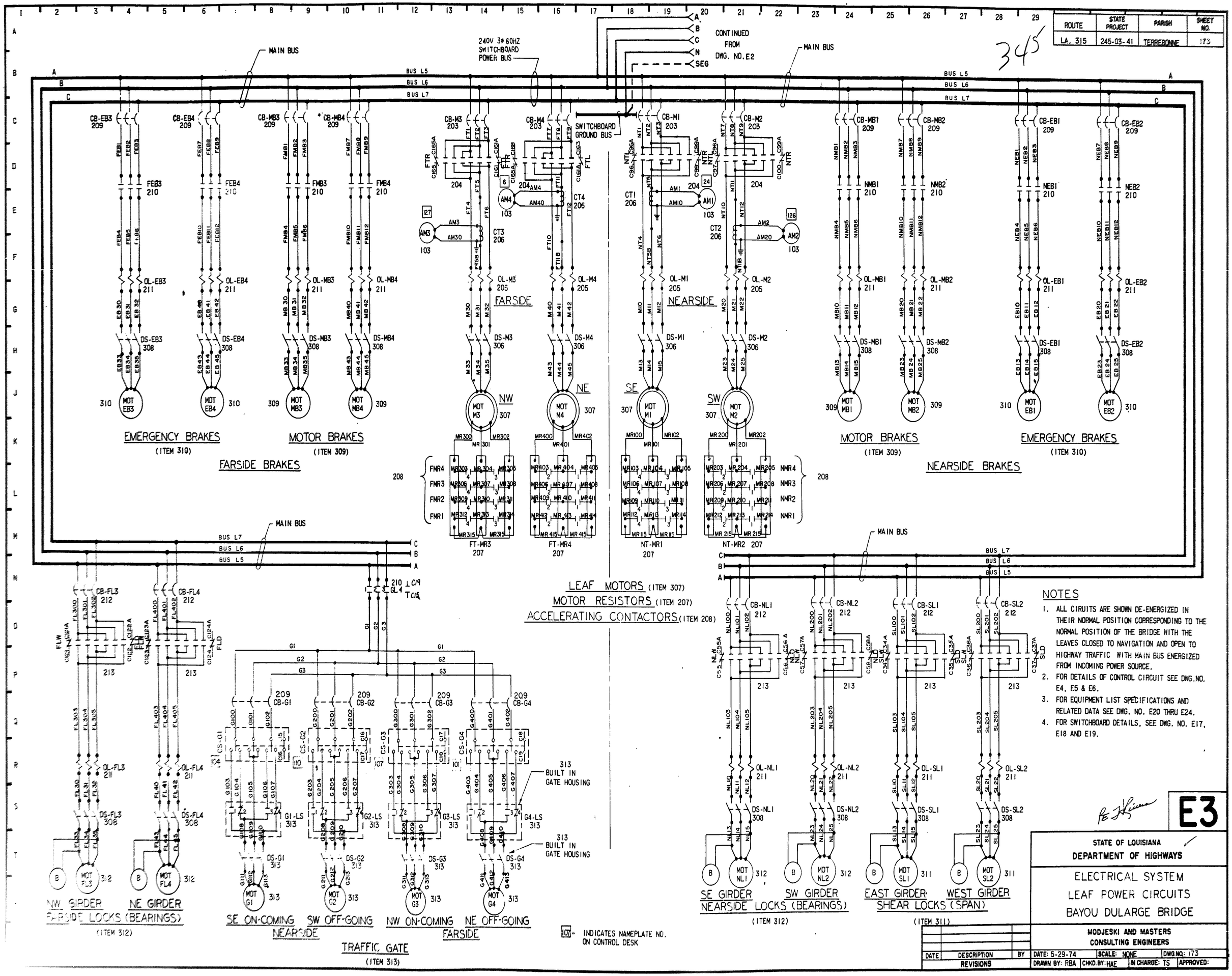

NOTES

1. ALL CIRUITS ARE SHOWN DE-ENERGIZED IN THEIR NORMAL POSITION CORRESPONDING TO THE NORMAL POSITION OF THE BRIDGE WITH THE LEAVES CLOSED TO NAVIGATION AND OPEN TO HIGHWAY TRAFFIC WITH MAIN BUS ENERGIZED FROM INCOMING POWER SOURCE.
2. FOR DETAILS OF CONTROL CIRCUIT SEE DWG. NO. E4, E5 & E6.
3. FOR EQUIPMENT LIST SPECIFICATIONS AND RELATED DATA SEE DWG. NO. E20 THRU E24.
4. FOR SWITCHBOARD DETAILS, SEE DWG. NO. E17, E18 AND E19.

E3

STATE OF LOUISIANA
DEPARTMENT OF HIGHWAYS

ELECTRICAL SYSTEM
LEAF POWER CIRCUITS
BAYOU DULARGE BRIDGE

MODJESKI AND MASTERS
CONSULTING ENGINEERS

DATE	DESCRIPTION	BY
	REVISIONS	

DATE: 5-29-74 | SCALE: NONE | DWG.NO.: 173
DRAWN BY: RBA | CHKD.BY: HAE | IN CHARGE: TS | APPROVED:

ROUTE	STATE PROJECT	PARISH	SHEET NO.
LA.315	245-03-41	TERREBONNE	174

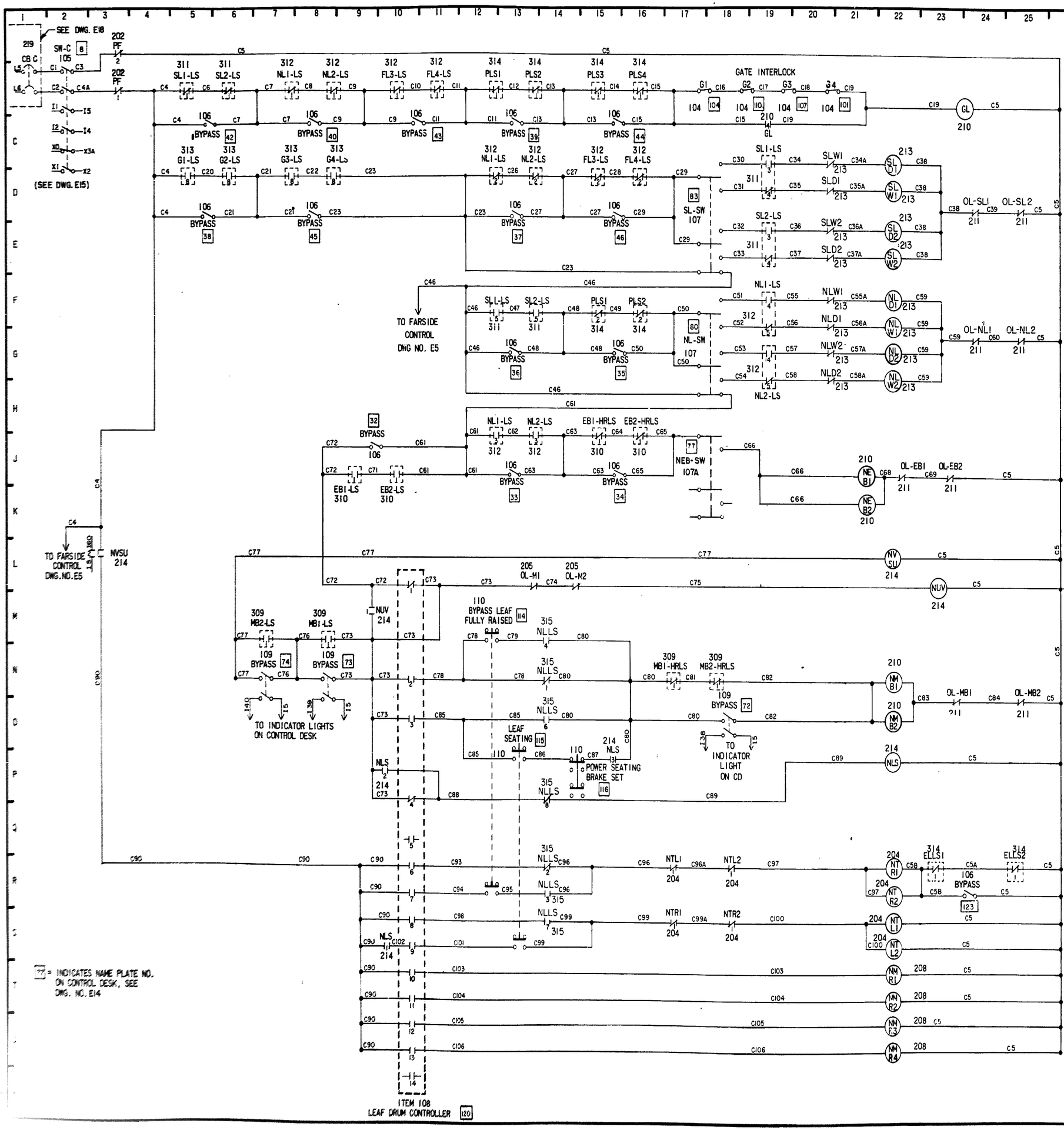

CONTROL CIRCUIT NOMENCLATURE

346

EB = EMERGENCY BRAKE
FEB = FARSIDE EMERGENCY BRAKE
FL = FARSIDE LOCK
FLD = FARSIDE LOCK DRIVEN
FLR = FARSIDE LEAF RELAY
FLS = FARSIDE LEAF SEATING
FLW = FARSIDE LOCK WITHDRAWN
FMB = FARSIDE MOTOR BRAKE
FMR = FARSIDE MOTOR RELAY
FTL = FARSIDE TRACTION LOWER
FTR = FARSIDE TRACTION RAISE
FUV = FARSIDE UNDER VOLTAGE
FVSU = FARSIDE VOLTAGE STEPUP
G = GATE
GL = GATE INTERLOCK
HRLS = HAND RELEASE LIMIT SW
LS = LIMIT SWITCH
M = MOTOR
MB = MOTOR BRAKE
NEB = NEARSIDE EMERGENCY BRAKE
NL = NEARSIDE LOCK
NLD = NEARSIDE LOCK DRIVEN
NLR = NEARSIDE LEAF RELAY
NLS = NEARSIDE LEAF SEATING
NLW = NEARSIDE LOCK WITHDRAWN
NMB = NEARSIDE MOTOR BRAKE
NMR = NEARSIDE MOTOR RELAY
NTL = NEARSIDE TRACTION LOWER
NTR = NEARSIDE TRACTION RAISE
NUV = NEARSIDE UNDER VOLTAGE
NVSU = NEARSIDE VOLTAGE STEPUP
OL = OVERLOAD
PF = PHASE FAILURE
PLS = PLUNGER LIMIT SWITCH
SL = SHEAR LOCK
SLD = SHEAR LOCK DRIVEN
SLW = SHEAR LOCK WITHDRAWN
SW = SWITCH
CD = CONTROL DESK
SBH = SWITCHBOARD HEATERS
SH = SIGNAL HORN
ELLS = EXTREME LIFT LIMIT SWITCH

NOTES:

1. ALL SWITCH CONTACTS ARE SHOWN IN THEIR NORMAL POSITION CORRESPONDING TO THE NORMAL POSITION OF THE BRIDGE THAT IS CLOSED TO NAVIGATION TRAFFIC, AND OPEN TO HIGHWAY TRAFFIC WITH MAIN BUS ENERGIZED FROM NORMAL INCOMING POWER SOURCE.
2. FOR FURTHER CONTROL CIRCUIT DETAILS SEE DWG.NO. E5 & E6.

E4

STATE OF LOUISIANA
DEPARTMENT OF HIGHWAYS

ELECTRICAL SYSTEM
CONTROL CIRCUIT - I
BAYOU DULARGE BRIDGE

MODJESKI AND MASTERS
CONSULTING ENGINEERS

DATE	DESCRIPTION	BY
	REVISIONS	

DATE: 5-28-74 | SCALE: NONE | DWG.NO.: 174
DRAWN BY: JMS | CHKD.BY: HAE | IN CHARGE: TS | APPROVED:

AS BUILT

ROUTE	STATE PROJECT	PARISH	SHEET NO.
LA. 315	245-03-41	TERREBONNE	175

347

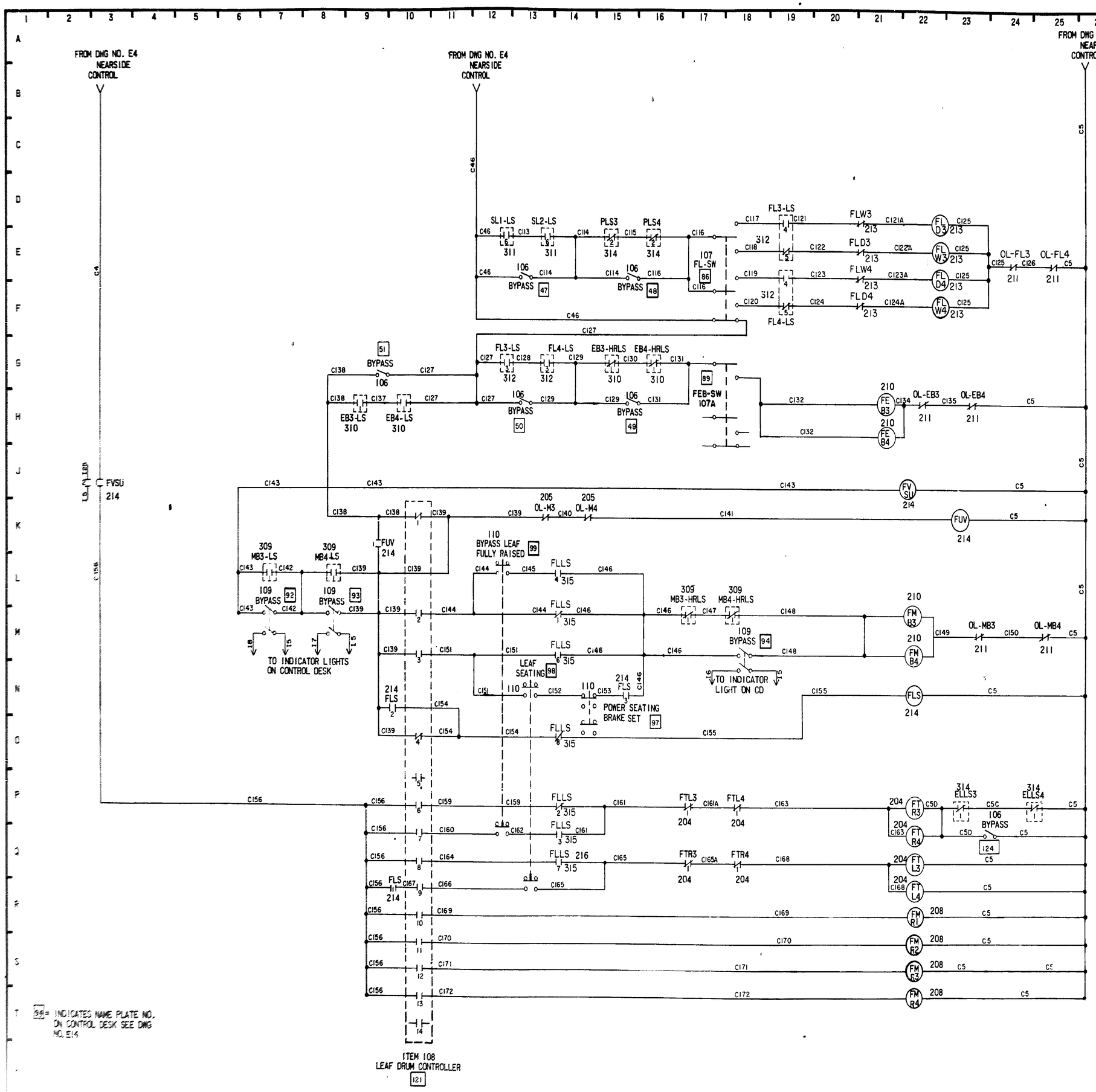

NOTES:

1. ALL SWITCH CONTACTS ARE SHOWN IN THEIR NORMAL POSITION CORRESPONDING TO THE NORMAL POSITION OF THE BRIDGE THAT IS CLOSED TO NAVIGATION TRAFFIC AND OPEN TO HIGHWAY TRAFFIC WITH MAIN BUS ENERGIZED FROM INCOMING POWER SERVICE.
2. FOR DESIGN NOMENCLATURE SEE DWG. NO. E4.
3. FOR FURTHER CONTROL CIRCUIT DETAILS SEE DWG. NOS. E4 & E6.

[99] = INDICATES NAME PLATE NO. ON CONTROL DESK SEE DWG NO. E14

E5

STATE OF LOUISIANA
DEPARTMENT OF HIGHWAYS

ELECTRICAL SYSTEM
CONTROL CIRCUIT - 2
BAYOU DULARGE BRIDGE

MODJESKI AND MASTERS
CONSULTING ENGINEERS

DATE	DESCRIPTION	BY
	REVISIONS	

DATE: 7-15-74 | SCALE: NONE | DWG.NO.: 175
DRAWN BY: RBA | CHKD. BY: JMS | IN CHARGE: TS | APPROVED:

AS BUILT

ROUTE	STATE PROJECT	PARISH	SHEET NO.
LA 315	245-03-41	TERREBONNE	176

348

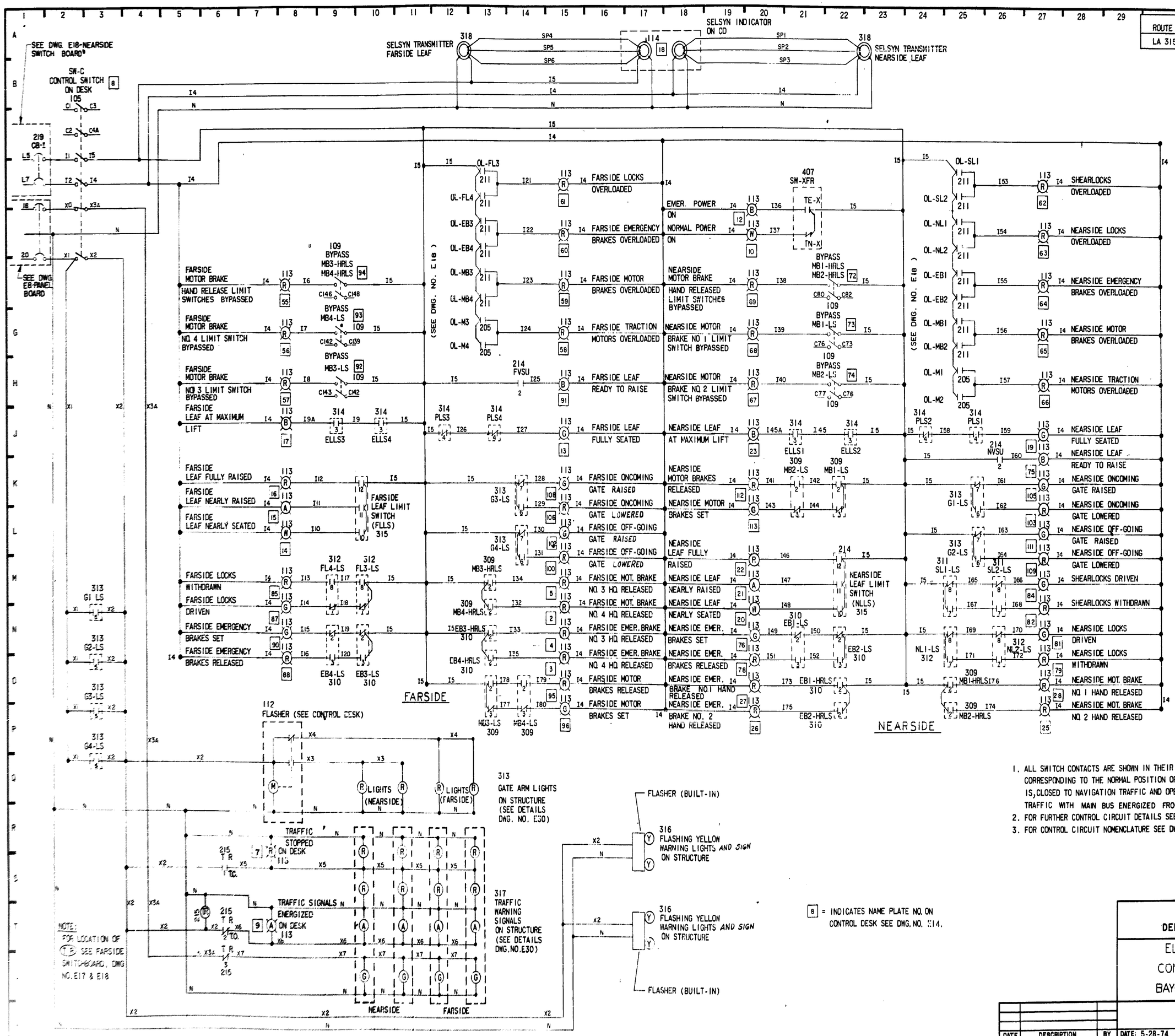

1. ALL SWITCH CONTACTS ARE SHOWN IN THEIR NORMAL POSITION CORRESPONDING TO THE NORMAL POSITION OF THE BRIDGE; THAT IS, CLOSED TO NAVIGATION TRAFFIC AND OPEN TO HIGHWAY TRAFFIC WITH MAIN BUS ENERGIZED FROM INCOMING POWER SOURCE.
2. FOR FURTHER CONTROL CIRCUIT DETAILS SEE DWG. NOS. E4 & E5.
3. FOR CONTROL CIRCUIT NOMENCLATURE SEE DWG. NO. E4.

8 = INDICATES NAME PLATE NO. ON CONTROL DESK SEE DWG. NO. E14.

E6

STATE OF LOUISIANA
DEPARTMENT OF HIGHWAYS

ELECTRICAL SYSTEM
CONTROL CIRCUIT -3
BAYOU DULARGE BRIDGE

MODJESKI AND MASTERS
CONSULTING ENGINEERS

DATE	DESCRIPTION	BY
	REVISIONS	

DATE: 5-28-74 | SCALE: NONE | DWG.NO.: 176
DRAWN BY: RBA | CHKD.BY: JMS | IN CHARGE: TS | APPROVED:

ROUTE	STATE PROJECT	PARISH	SHEET NO.
LA.315	245-03-41	TERREBONNE	177

349

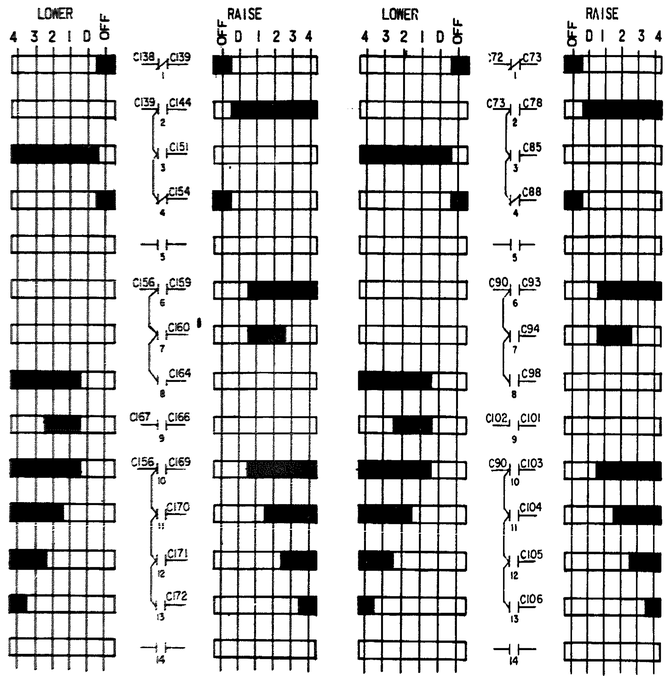

LEAF DRUM CONTROLLERS (SEE DWG. E14 NOTE NO 3)
(ITEM 108)

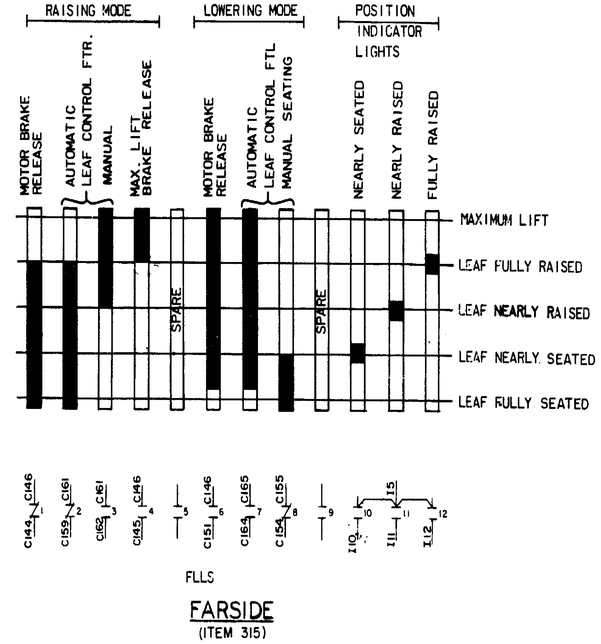

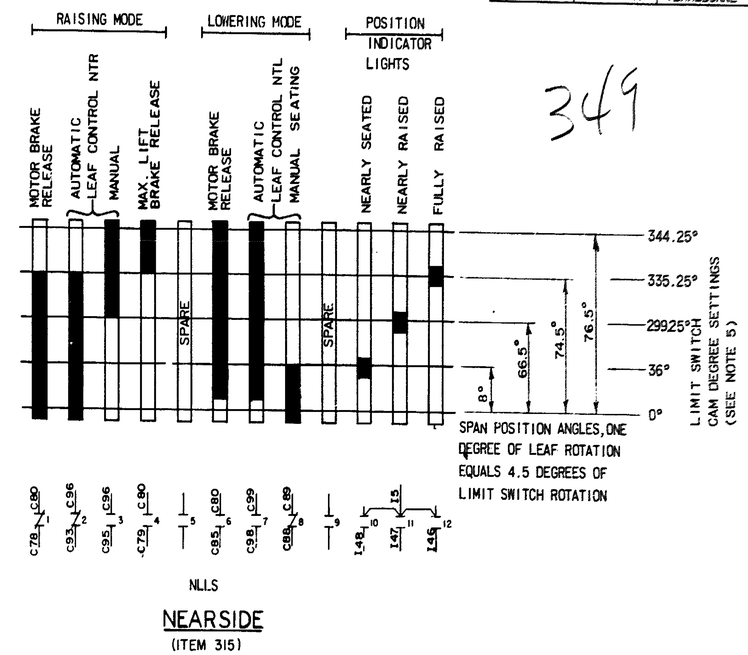

LEAF LIMIT SWITCHES
(ITEM 315)

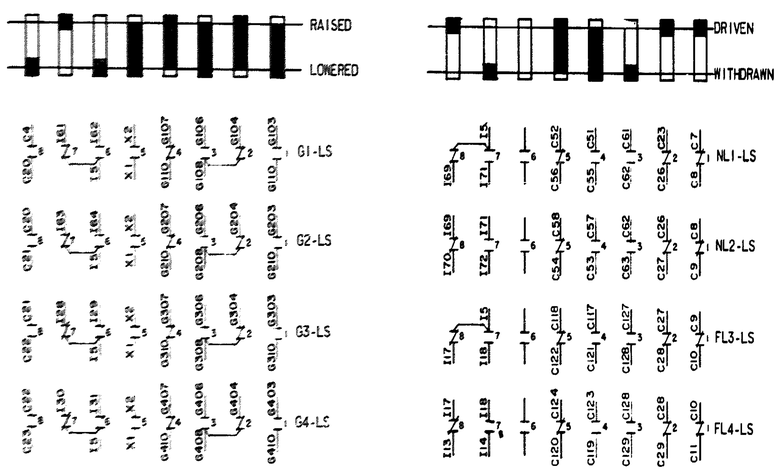

GATE LIMIT SWITCHES
(ITEM 313)

FARSIDE & NEARSIDE
LOCK LIMIT SWITCHES
(ITEM 312)

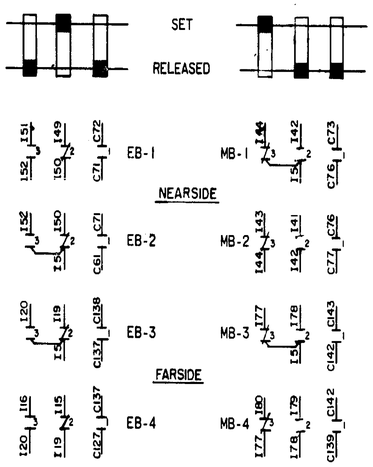

EMERGENCY BRAKE
LIMIT SWITCHES
(ITEM 310)

MOTOR BRAKE
LIMIT SWITCHES
(ITEM 309)

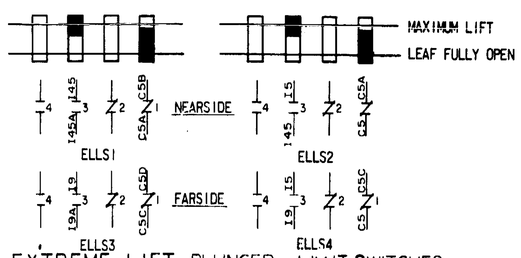

EXTREME LIFT PLUNGER LIMIT SWITCHES
(ITEM 314)

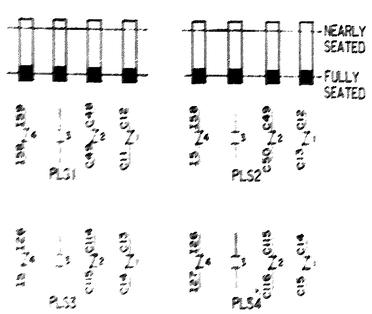

PLUNGER LIMIT SWITCHES
(ITEM 314)

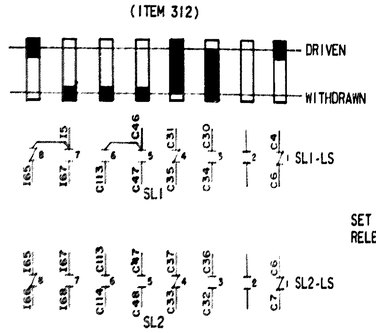

SHEAR LOCK LIMIT SWITCHES
(ITEM 311)

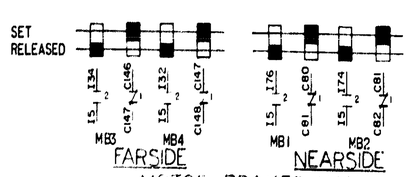

MOTOR BRAKES HAND
RELEASE LIMIT SWITCHES
(ITEM 309)

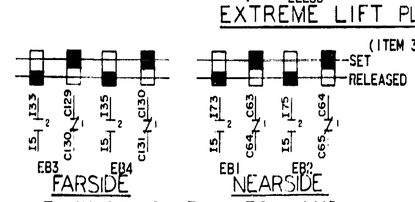

EMERGENCY BRAKES HAND
RELEASE LIMIT SWITCHES
(ITEM 310)

NOTES:

1. ALL SWITCH CONTACTS ARE SHOWN IN THEIR NORMAL POSITION CORRESPONDING TO THE NORMAL POSITION OF THE BRIDGE, THAT IS, CLOSED TO NAVIGATION TRAFFIC, AND OPEN TO HIGHWAY TRAFFIC WITH MAIN BUS ENERGIZED FROM INCOMING POWER SOURCE.
2. FOR CONTROL CIRCUIT NOMENCLATURE, SEE DWG. NO. E4.
3. ALL WIRE ENDS SHALL BE IDENTIFIED AS DESIGNATED ON THE WIRING DIAGRAMS.
4. ALL WIRES ENTERING EQUIPMENT SHALL BE PLACED IN NEAT COMPACT WELL SUPPORTED BUNDLES FROM CONDUIT EXITS TO TERMINAL POINT, USING NYLON CABLE TIES AND STRAPS OR APPROVED EQUAL.
5. LEAF LIMIT CAM SETTINGS SHOWN ARE FOR INFORMATION ONLY, THE CONTRACTOR SHALL MAKE FINAL SETTINGS AND ADJUSTMENT IN THE FIELD.
6. FOR FURTHER CONTROL CIRCUIT DETAILS SEE DWG. NO. E4, E5 & E6.

E7

STATE OF LOUISIANA
DEPARTMENT OF HIGHWAYS

ELECTRICAL SYSTEM
CONTACT WIRING CONNECTIONS
BAYOU DULARGE BRIDGE

MODJESKI AND MASTERS
CONSULTING ENGINEERS

DATE	DESCRIPTION	BY	DATE: 7-15-74	SCALE: NONE	DWG.NO.: 177
	REVISIONS		DRAWN BY: J.M.S.	CHKD. BY: HAE	IN CHARGE: TS	APPROVED:

AS-BUILT

ROUTE	STATE PROJECT	PARISH	SHEET NO.
LA.315	245-03-41	TERREBONNE	178

350

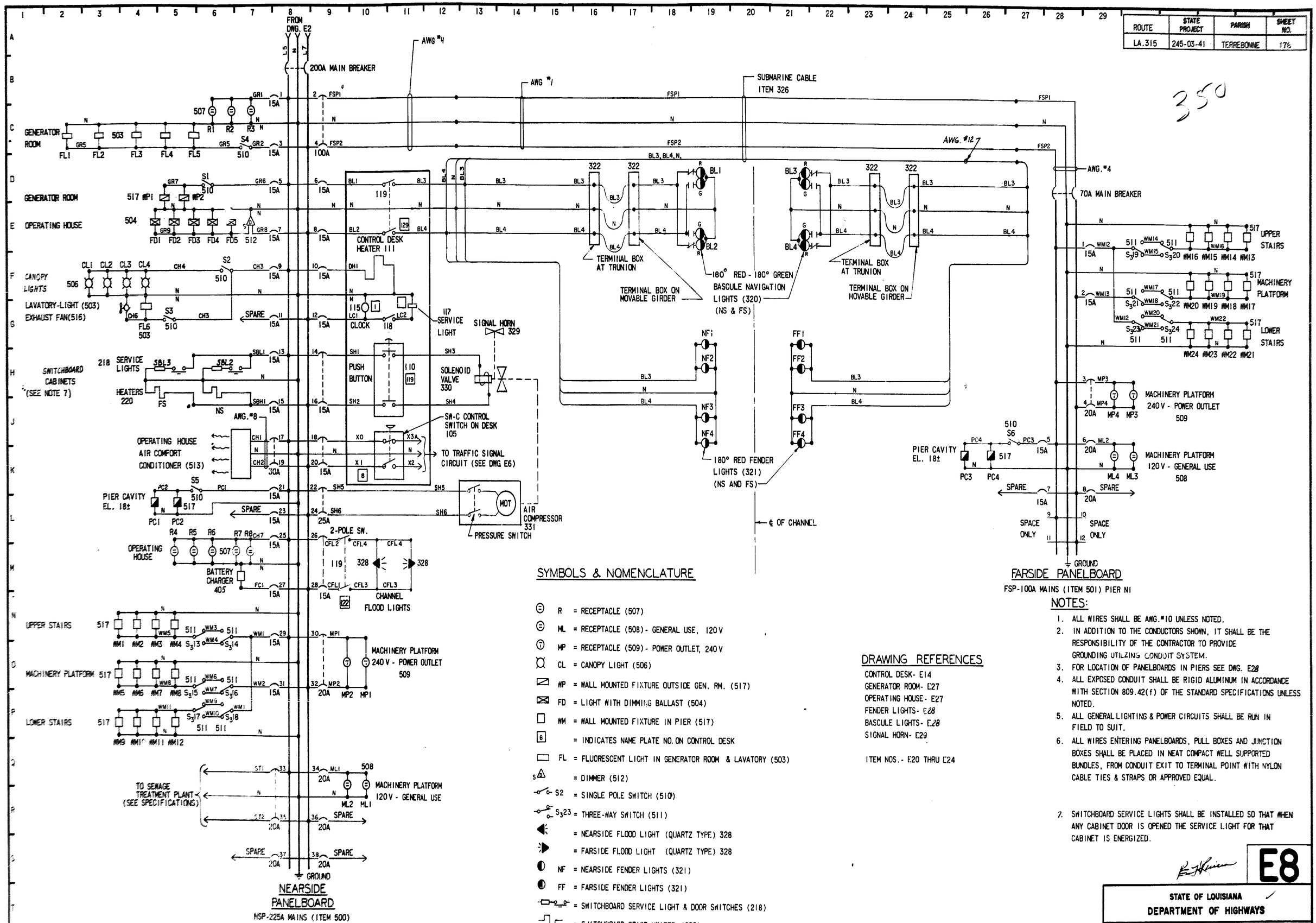

SYMBOLS & NOMENCLATURE

- R = RECEPTACLE (507)
- ML = RECEPTACLE (508) - GENERAL USE, 120V
- MP = RECEPTACLE (509) - POWER OUTLET, 240V
- CL = CANOPY LIGHT (506)
- WP = WALL MOUNTED FIXTURE OUTSIDE GEN. RM. (517)
- FD = LIGHT WITH DIMMING BALLAST (504)
- WM = WALL MOUNTED FIXTURE IN PIER (517)
- [8] = INDICATES NAME PLATE NO. ON CONTROL DESK
- FL = FLUORESCENT LIGHT IN GENERATOR ROOM & LAVATORY (503)
- S = DIMMER (512)
- S2 = SINGLE POLE SWITCH (510)
- $S_3$23 = THREE-WAY SWITCH (511)
- = NEARSIDE FLOOD LIGHT (QUARTZ TYPE) 328
- = FARSIDE FLOOD LIGHT (QUARTZ TYPE) 328
- NF = NEARSIDE FENDER LIGHTS (321)
- FF = FARSIDE FENDER LIGHTS (321)
- = SWITCHBOARD SERVICE LIGHT & DOOR SWITCHES (218)
- = SWITCHBOARD SPACE HEATER (220)
- BL = 180° RED-180° GREEN BASCULE NAVIGATION LIGHTS (320)
- PC = WALL MOUNTED FIXTURE - PIER CAVITY (517)
- = LAVATORY EXHAUST FAN (516)

DRAWING REFERENCES

CONTROL DESK- E14
GENERATOR ROOM- E27
OPERATING HOUSE- E27
FENDER LIGHTS- E28
BASCULE LIGHTS- E28
SIGNAL HORN- E29

ITEM NOS.- E20 THRU E24

NOTES:

1. ALL WIRES SHALL BE AWG.#10 UNLESS NOTED.
2. IN ADDITION TO THE CONDUCTORS SHOWN, IT SHALL BE THE RESPONSIBILITY OF THE CONTRACTOR TO PROVIDE GROUNDING UTILIZING CONDUIT SYSTEM.
3. FOR LOCATION OF PANELBOARDS IN PIERS SEE DWG. E28
4. ALL EXPOSED CONDUIT SHALL BE RIGID ALUMINUM IN ACCORDANCE WITH SECTION 809.42(f) OF THE STANDARD SPECIFICATIONS UNLESS NOTED.
5. ALL GENERAL LIGHTING & POWER CIRCUITS SHALL BE RUN IN FIELD TO SUIT.
6. ALL WIRES ENTERING PANELBOARDS, PULL BOXES AND JUNCTION BOXES SHALL BE PLACED IN NEAT COMPACT WELL SUPPORTED BUNDLES, FROM CONDUIT EXIT TO TERMINAL POINT WITH NYLON CABLE TIES & STRAPS OR APPROVED EQUAL.
7. SWITCHBOARD SERVICE LIGHTS SHALL BE INSTALLED SO THAT WHEN ANY CABINET DOOR IS OPENED THE SERVICE LIGHT FOR THAT CABINET IS ENERGIZED.

E8

STATE OF LOUISIANA
DEPARTMENT OF HIGHWAYS

ELECTRICAL SYSTEM
POWER & LIGHTING PANELBOARDS
BAYOU DULARGE BRIDGE

MODJESKI AND MASTERS
CONSULTING ENGINEERS

DATE	DESCRIPTION	BY
	REVISIONS	

DATE: 8-1-74 | SCALE: NONE | DWG.NO.: 178
DRAWN BY: GAS | CHKD.BY: HAE | IN CHARGE: TS | APPROVED:

AS-BUILT

ROUTE	STATE PROJECT	PARISH	SHEET NO.
L.A. 315	245-03-41	TERREBONNE	179

351

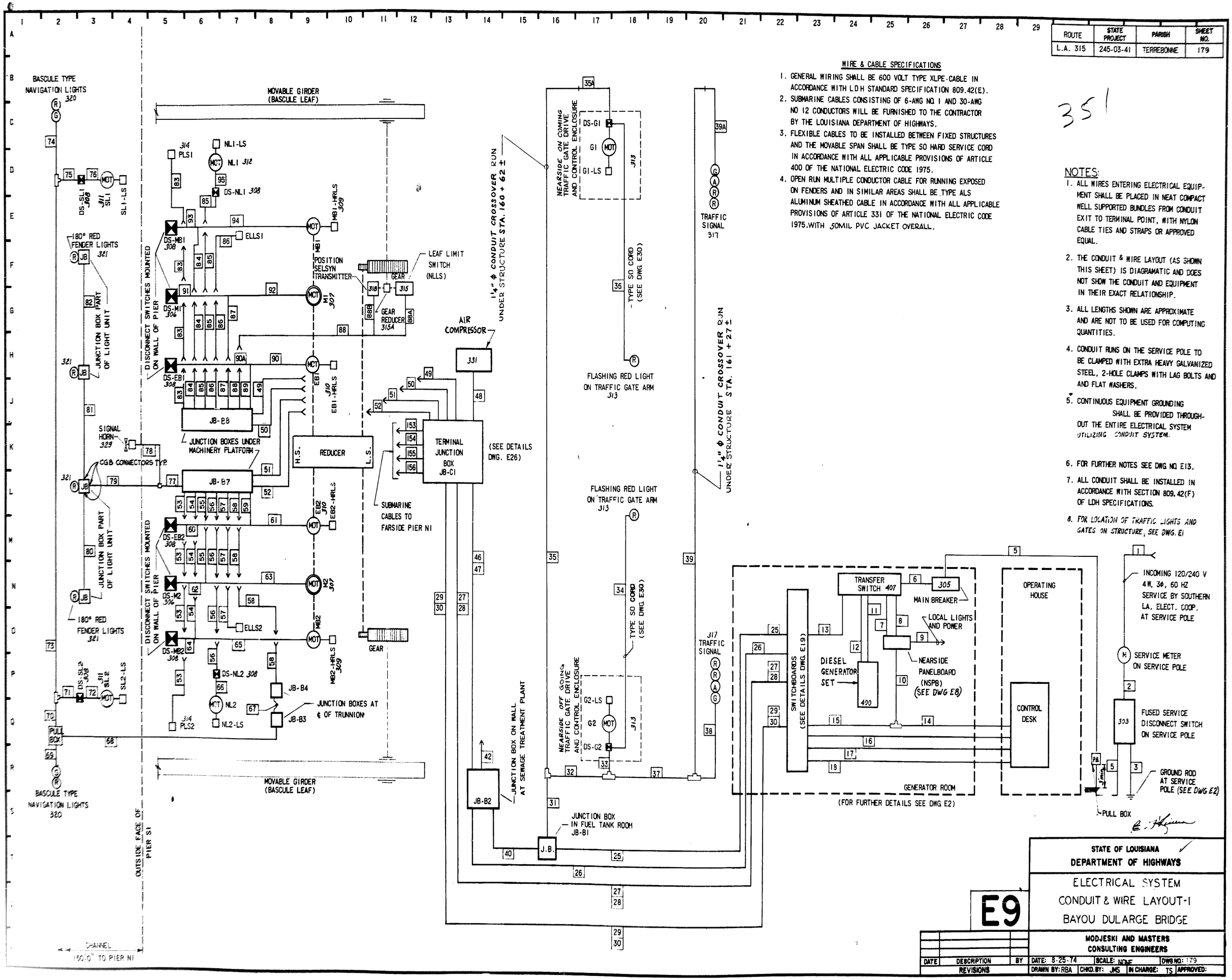

WIRE & CABLE SPECIFICATIONS

1. GENERAL WIRING SHALL BE 600 VOLT TYPE XLPE-CABLE IN ACCORDANCE WITH LDH STANDARD SPECIFICATION 809.42(E).
2. SUBMARINE CABLES CONSISTING OF 6-AWG NO. 1 AND 30-AWG NO 12 CONDUCTORS WILL BE FURNISHED TO THE CONTRACTOR BY THE LOUISIANA DEPARTMENT OF HIGHWAYS.
3. FLEXIBLE CABLES TO BE INSTALLED BETWEEN FIXED STRUCTURES AND THE MOVABLE SPAN SHALL BE TYPE SO HARD SERVICE CORD IN ACCORDANCE WITH ALL APPLICABLE PROVISIONS OF ARTICLE 400 OF THE NATIONAL ELECTRIC CODE 1975.
4. OPEN RUN MULTIPLE CONDUCTOR CABLE FOR RUNNING EXPOSED ON FENDERS AND IN SIMILAR AREAS SHALL BE TYPE ALS ALUMINUM SHEATHED CABLE IN ACCORDANCE WITH ALL APPLICABLE PROVISIONS OF ARTICLE 331 OF THE NATIONAL ELECTRIC CODE 1975.WITH 50MIL PVC JACKET OVERALL.

NOTES:

1. ALL WIRES ENTERING ELECTRICAL EQUIPMENT SHALL BE PLACED IN NEAT COMPACT WELL SUPPORTED BUNDLES FROM CONDUIT EXIT TO TERMINAL POINT, WITH NYLON CABLE TIES AND STRAPS OR APPROVED EQUAL.
2. THE CONDUIT & WIRE LAYOUT (AS SHOWN THIS SHEET) IS DIAGRAMATIC AND DOES NOT SHOW THE CONDUIT AND EQUIPMENT IN THEIR EXACT RELATIONSHIP.
3. ALL LENGTHS SHOWN ARE APPROXIMATE AND ARE NOT TO BE USED FOR COMPUTING QUANTITIES.
4. CONDUIT RUNS ON THE SERVICE POLE TO BE CLAMPED WITH EXTRA HEAVY GALVANIZED STEEL, 2-HOLE CLAMPS WITH LAG BOLTS AND AND FLAT WASHERS.
5. CONTINUOUS EQUIPMENT GROUNDING SHALL BE PROVIDED THROUGHOUT THE ENTIRE ELECTRICAL SYSTEM UTILIZING CONDUIT SYSTEM.
6. FOR FURTHER NOTES SEE DWG NO E13.
7. ALL CONDUIT SHALL BE INSTALLED IN ACCORDANCE WITH SECTION 809.42(F) OF LDH SPECIFICATIONS.
8. FOR LOCATION OF TRAFFIC LIGHTS AND GATES ON STRUCTURE, SEE DWG. E1

STATE OF LOUISIANA
DEPARTMENT OF HIGHWAYS

ELECTRICAL SYSTEM
CONDUIT & WIRE LAYOUT-1
BAYOU DULARGE BRIDGE

E9

MODJESKI AND MASTERS
CONSULTING ENGINEERS

DATE	DESCRIPTION	BY	DATE: 8-25-74	SCALE: NONE	DWG.NO: 179
REVISIONS			DRAWN BY: RBA	CHKD.BY: JMS	IN CHARGE: TS	APPROVED:

AS BUILT

ROUTE	STATE PROJECT	PARISH	SHEET NO.
LA. 315	245-03-41	TERREBONNE	180

352

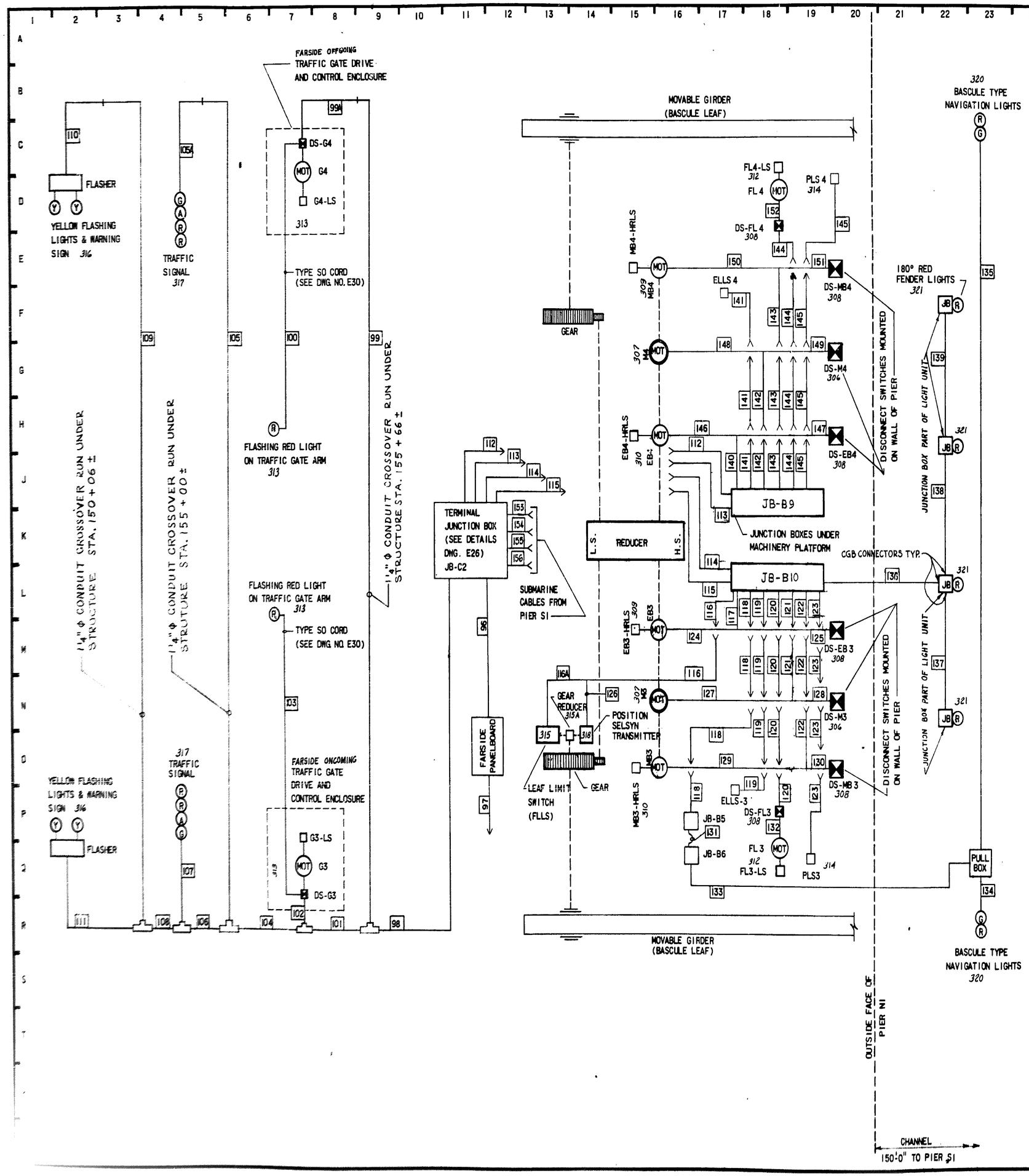

NOTES:

1. FOR NOTES AND MATERIAL SPECIFICATIONS SEE DWG NO E9.

E10

STATE OF LOUISIANA
DEPARTMENT OF HIGHWAYS

ELECTRICAL SYSTEM
CONDUIT & WIRE LAYOUT-2
BAYOU DULARGE BRIDGE

MODJESKI AND MASTERS
CONSULTING ENGINEERS

DATE	DESCRIPTION	BY
	REVISIONS	

DATE: 8-25-74 | SCALE: NONE | DWG.NO.: 180
DRAWN BY: RBA | CHKD. BY: JMS | IN CHARGE: TS | APPROVED:

AS-BUILT

RS. TE	STATE PROJECT	PARISH	SHEET NO.
L.A. 315	245-53-41	TERREBONNE	181

358

RUN NO.	CONDUIT SIZE	CONDUIT LGTH	WIRE NO & SIZE	WIRE DESIGNATION
1	4"φ		3 500MCM.	SE1, 2, 3
			1#1/0	SEN
2	4"φ		3 500MCM	SE 4,5,6
			1#1/0	SEN
3	2"		1#1/0	SEN
4				UNASSIGNED
5	4"φ		3 500MCM.	SE 7,8,9
			1#1/0	SEN,
6	4"φ		3 500MCM.	LI, 2, 3
			1#1/0	LN,
7	1"φ		7# 10	FC1, N, T1, 2, I5, 36, 37
8	2"φ		2#3/0	L5, L7
			1#1/0	N
9	1"φ	AS REQUIRED	#10	LOCAL RUN AS REQUIRED
10	2½"φ		37#10	PC1, WM1, 2, MP1, 2, ST1, 2, ML1, CFL1, 2, SH5, 6, X0, X1, SH1, 2, LC1, DH1, BL1 2, I5, 36, 37, T1, 2, SBL1, SBH1 N, N, N, N, N, N, N, N, N, N,
			3#4	FSP1, FSP2, N
11	4"φ		3 500MCM.	EL1, 2, 3
			1#1/0	ELN,
12	1"φ		4#10	T1, 3, 4, 5
13	4"φ		3 500 MCM	L5, 6, 7
			1#1/0	ELN,
14	4"φ	3'	32#10	CFL1, 2, X0, X1, SH1, 2, LC1, DH1, BL1, 2, I5, 36, 37, T1, 2, PF1, 2, 3 G100, 101, 102, 200, 201, 202, 300, 301, 302, 400 401, 402, N, N
15	4"φ	3'	34#10	PC1, WM1, 2, MP1, 2, ST1, 2, ML1, SH5, 6 PF1, 2, 3, SBL1, SBH1 G100, 101, 102, 200, 201, 202, 300, 301, 302 400, 401, 402, N, N, N, N, N, N, N
			3#4	FSP1, 2, N

RUN NO.	CONDUIT SIZE	CONDUIT LGTH	WIRE NO & SIZE	WIRE DESIGNATION
16	4"φ	3'	85#10	C15, 19, 51, 52, 53, 54, 61, 50, 46, 29, 23, 30, 31, 32, 33, 131, 132, 65, 66, 80, 82, 76, 73, 77, 143, 142, 139, 146, 148, 87, 85, 78, 79, 99, 95, 145, 144, 162, 151, 165, 153, 138, 127, 129, , 114 116, 117, 118, 27, 119, 21, 120, 13, , 9, 11, 4, 7, 48, , 63, , 72, , 1, 2, 4A, 3, , 154 159, 156, 164, 167, 169, 170, 171, 172, 88, 90, 93, 98, 102, 103, 104, 105, 106, 5, 50, 5B
17	4"φ	3'	82#10	I1, 2, 34, 33, 35, 32, 9A, 10, 11, 12, 27, 45A, 46, 47, 48, 59, 76, 73, 75, 74, 57, 56, 55, 54, 53, 21, 22, 23, 24, 51, 49, 72, 70, 68, 66, 13, 14, 16, 15, 61, 62, 30, 31, 63, 64, 28, 29, 25, 60, 79, 80, 43, 41, X3A, 2, 5, 6, 4, 3, N, N, N G103, 104, 105, 106, 107, 203, 204, 205, 206, 207, 303, 304, 305, 306, 307, 403, 404, 405, 406, 407,
18	4"φ	3'	24#10	BL3, 4, CFL3, 4, SP1, 2, 3, 4, 5, 6, SH3, 4, AM1, 10, 2, 20, 4, 40, 3, 30, I4, I5, N, N
19				UNASSIGNED
20				UNASSIGNED
21				UNASSIGNED
22				UNASSIGNED
23				UNASSIGNED
24				UNASSIGNED
25	4"φ	15'	43#10	X1, 2, 3, 4, 5, 6, 7, N, N, N, N, N, I5, 28, 29, 30, 31, 63, 64, 61, 62, C21, 4, G203, 204, 205, 206, 207, 103, 104, 105, 106, 107, 303, 304, 305, 306, 307, 403, 404, 405, 406, 407,
			3#4	FSP1, 2, N
26	4"φ	40'	29#10	PC1, N, WM1, 2, N, N, N, MP1, 2, ST1, 2, N, ML1, N, SH5, 6, BL3, 4, N, CFL3, 4, SP1, 2, 3, 4, 5, 6, SH5, SH4
27	4"φ	60'	79#10	C4, 5, 58, 50, 7, 9, 11, 13, 15, 23, 27, 29, 30, 31, 32, 33, 34, 35, 36, 37, 46, 48, 50, 51, 52, 53, 54, 55, 56, 57, 58, 61, 63, 65, 72, 73, 76, 77, 78, 79, 80, 82, 85, 88, 89, 93, 95, 96, 98, 99, 114, 116, 117, 118, 120, 121, 122, 123, 124, 127, 129, 131, 138, 139, 142, 143, 144, 145, 146, 148, 151, 154, 155, 159, 161, 162, 164, 165, 119

RUN NO.	CONDUIT SIZE	CONDUIT LGTH	WIRE NO & SIZE	WIRE DESIGNATION
28	4"φ	60'	34#10	I4, 5, 9A, 10, 11, 12, 13, 14, 15, 16, 27, 32, 33, 34, 35, 41, 43, 45A, 46, 47, 48, 49, 51, 59, 66, 68, 70, 72, 73, 74, 75, 76, 79, 80, N
29	4"φ	60'	42#10	EB10, 11, 12, 20, 21, 22, 30, 31, 32, 40, 41, 42, MB10, 11, 12, 20, 21, 22, 30, 31, 32, 40, 41, 42, FL30, 31, 32, 40, 41, 42, SL10, 11, 12, 20, 21, 22, NL10, 11, 12, 20, 21, 22
30	4"φ	60'	24#2	MI0, 11, 12, 20, 21, 22, 30, 31, 32, 40, 41, 42, MR100, 101, 102, 200, 201, 202, 300, 301, 302, 400, 401, 402
31	2"φ	150'	36#10	G103, 104, 105, 106, 107, 203, 204, 205, 206, 207, C20, 20, 21, 4 I5, 62, 61, 63, 64, 5 X1, 2, 3, 5, 6, 7, N, N, N X1, 2, 3, 5, 6, 7, N, N, N
32	2"φ	2'	22 #10	G203, 204, 205, 206, 207, C20, 21, I63, 64, 5 X1, 2, 3, 5, 6, 7, X5, 6, 7, N, N, N
33	2"φ	2'	14 #10	X1, 2, 3, N, I63, 64, 5 G203, 204, 205, 206, 207 C20, 21
34	–	35'	3#10	X3, N, GNDTYPE SO CABLE
35	1¼"φ	35'	14#10	G103, 104, 105, 106, 107, C20, 4, I61, 62, 5 X3, 1, 2, N
35A	2"φ	2'	14#10	G103, 104, 105, 106, 107 C20, 4, I61, 62, 5 X3, 1, 2, N
36	–	35'	3#10	X3, NGND TYPE SO CABLE
37	2"φ	50'	8#10	X5, 6, 7, N X5, 6, 7, N
38	2"φ	2'	4#10	X5, 6, 7, N
39	1¼"φ	35'	4#10	X5, 6, 7, N
39A	2"	2'	4#10	X5, 6, 7, N,
40	4"φ	40'	25#10	I5, 28, 29, 30, 31 X1, 2, 4, 5, 6, 7, N, N, N, G303, 304, 305, 306, 307, 403, 404, 404, 406, 407, C21
			3#4	FSP1, 2, N

RUN NO.	CONDUIT SIZE	CONDUIT LGTH	WIRE NO & SIZE	WIRE DESIGNATION
42	1"φ	AS REQ'D	#10	WM1, 2, ST1, 2, ML1, MP1, 2, N, N, N, LOCAL LIGHT AND POWER RUN IN FIELD TO SUIT
43				UNASSIGNED
44				UNASSIGNED
45				UNASSIGNED
46	4"φ	25'	18#10	PC1, N, CFL3, 4, N, SH5, 6, 3, 4, BL3, 4, N SP1, 2, 3, 4, 5, 6
			3#4	FSP1, 2, N
47	4"φ	25'	24#10	G303, 304, 305, 306, 307 G403, 404, 405, 406, 407 X1, 2, 4, 5, 6, 7, N, N, I5, 28, 29, 30, 31, C21
48	1"φ	10	2#10	SH5, 6
49	4"φ	25'	3#10	MB10, 11, 12, NL10, 11, 12, EB10, 11, 12
			6#2	MR100, 101, 102, M10, 11, 12
50	4"φ	25'	57#10	I5, 59, 76, 44, 42, 69, 71, 45A, 45, 73, 49, 50 51, 52, 46, 47, 48, 58, 4, SP1, 2, 3, N C49, 48, 11, 12, 81, 73, 76, 56, 52, 51, 55, 62 61, 26, 23, 8, 7, 5A, 58, 78, 80, 93, 95, 79 85, 98, 99, 88, 89, 63, 64, 71, 72, 96
51	4"φ	25'	20 #10	BL3, BL4, N, SH3, 4 MB20, 21, 22, NL20, 21, 22, SL20, 21, 22, 10, 11, 12 EB20, 21, 22
			6#2	MR200, 201, 202, M20, 21, 22
52	4"φ	25'	64#10	I5, 58, 74, 70, 71, 72, 45, 68, 75, 50, 41, 43, 42 44, 52, 66, 69 C49, 50, 12, 13, 81, 82, 54, 58, 53, 57, 62, 63, 26 27, 8, 9, 5, 5A, 46, 31, 35, 30, 34, 4, 114, 48, 33 37, 32, 36, 7, 64, 65, 61, 71, 77, 76
53	1"φ	8'	6#10	I5, 58 C13, 12, 49, 50
54	1¼"φ	8'	13#10	MB20, 21, 22 I5, 74, 41, 43, 42, 44 C81, 82, 77, 76
55	2"φ	8'	6#2	M20, 21, 22 MR200, 201, 202

NOTE:
FOR NOTES SEE SHEET E13.

E11

STATE OF LOUISIANA
DEPARTMENT OF HIGHWAYS

ELECTRICAL SYSTEM
TABULATION OF CONDUIT & WIRE-1
BAYOU DULARGE BRIDGE

MODJESKI AND MASTERS
CONSULTING ENGINEERS

DATE	DESCRIPTION	BY
	REVISIONS	

DATE: 12-18-74 | SCALE: NONE | DWG.NO.: 181
DRAWN BY: RBA | CHKD.BY: JMS | IN CHARGE: TS | APPROVED:

AS-BUILT

ROUTE	STATE PROJECT	PARISH	SHEET NO.
LA 315	245-03-41	TERREBONNE	182

354

RUN NO	CONDUIT SIZE	CONDUIT LGTH	WIRE NO.+SIZE	WIRE DESIGNATION
56	1¼"φ	8'	17#10	NL20, 21, 22 I70, 71, 72, 69, C54, 58, 53, 57, 62, 63, 26, 27 8, 9
57	1"φ	8'	4#10	I45, 5 C5, 5A
58	2"φ	20'	25#10	BL3, 4, N, SL10, 11, 12, 20, 21, 22, I5, 66, 68 C46, C31, 35, 30, 34, 4, 114, 48, 33, 37, 32, 36, 7
59	1½"φ	8'	11#10	EB20, 21, 22, I75, 50, 5, 52 C64, 65, 61, 71
60	1"φ	4'	6#10	EB20, 21, 22, 23, 24, 25
61	1½"φ	8'	11#10	EB23, 24, 25, I75, 50, 5, 52 C64, 65, 61, 71
62	2"φ	4'	6#2	M20, 21, 22, 23, 24, 25
63	2"φ	8'	6#2	M23, 24, 25, MR200, 201, 202
64	1"φ	4'	6#10	MB20, 21, 22, 23, 24, 25
65	1½"φ	8'	13#10	MB23, 24, 25, I5, 74, 41, 42, 43, 44 C81, 82, 76, 77
66	1½"φ	4'	17#10	NL23, 24, 25, I69, 70, 71, 72 C54, 58, 53, 57, 62, 63, 26, 27, 8, 9
67		16'	27#10	BL3, 4, N, SL20, 21, 22, 10, 11, 12 I5, 66, 68, C46, 31, 35, 30, 34, 4, 114, 48, 33 37, 32, 36, 7 2-SPARES TYPE SO CABLE SEE DETAILS DWG E31
68	2"φ	80'	28#10	BL3, 4, BL3, 4, N, N SL20, 21, 22, 10, 11, 12 I66, 68, C46, 31, 35, 30, 34, 4, 114, 48, 33, 37 32, 36, 7, I5
69	1"φ	10'	3#10	BL3, 4, N
70	2"φ	15'	25#10	SL10, 11, 12, 20, 21, 22 I5, 66, 68, C46, 31, 35, 30, 34, 4, 114, 48, 33 37, 32, 36, 7, BL3, 4, N
71	1½"φ	5'	17#10	SL20, 21, 22, I65, 66, 67, 68 C113, 114, 47, 48, 33, 37, 32, 36, 6, 7
72	1½"φ	5'	17#10	SL23, 24, 25, I65, 66, 67, 68 C113, 114, 47, 48, 33, 37, 32, 36, 6, 7
73	2"φ	30'	18#10	SL10, 11, 12, BL3, 4, N I65, 67, 5, C113, 46, 47, 31, 35, 34, 30, 4, 6
74	1"φ	15'	3#10	BL3, 4, N
75	1½"φ	5'	15#10	I65, 67, 5, C113, 46, 47, 31, 35, 30, 34 SL10, 11, 12, C4, 6

RUN NO	CONDUIT SIZE	CONDUIT LGTH	WIRE NO&SIZE	WIRE DESIGNATION
76	1¼"φ	8'	15#10	SL13, 14, 15 I65, 67, 5 C113, 46, 47, 31, 35, 34, 30, 4, 6
77	1"φ	4'	6#10	BL3, 4, N SH3, 4, SPARE
78	1"φ	3'	2#10	SH3, 4
79	—	20'	3#10	BL3, 4, N TYPE ALS CABLE
80	—	30'	3#10	BL3, 4, N TYPE ALS CABLE
81	—	100'	3#10	BL3, 4, N TYPE ALS CABLE
82	—	30'	3#10	BL3, 4, N TYPE ALS CABLE
83	1"φ	18'	6#10	I58, 59 C49, 48, 11, 12
84	1¼"φ	8'	11#10	MB10, 11, 12 I76, 5, 44, 42 C80, 81, 73, 76
85	1½"φ	8'	16#10	NL10, 11, 12 I69, 71, 5 C56, 52, 51, 55, 62, 61, 26, 23, 8, 7
86	1"φ	18'	4#10	I45, 45A C5A, 5B
87	2"φ	8'	6#2	M10, 11, 12 MR100, 101, 102
88	1½"φ	8'	20#10	C78, 80, 93, 96, 95, 79, 85, 98, C99, 88, 89 I5, 4, N, SP1, 2, 3, 146, 47, 48
88A	1½"φ	4'	15#10	C78, 80, 93, 96, 95, 79, 85, 98, 99, 88, 89 I5, 46, 47, 48
88B	1"φ	4'	5#10	SP1, 2, 3, 14, N
89	1¼"φ	8'	13#10	EB10, 11, 12 I5, 73, 49, 50, 51, 52 C63, 64, 71, 72
90	1¼"φ	8'	13#10	EB13, 14, 15 I5, 73, 49, 50, 51, 52 C63, 64, 71, 72
90A	1"φ	4'	6#10	EB10, 11, 12 EB13, 14, 15
91	2"φ	4'	6#2	M10, 11, 12, 13, 14, 15
92	2"φ	8'	6#2	M13, 14, 15 MR100, 101, 102
93	1"φ	4'	6#10	MB10, 11, 12, 13, 14, 15

RUN NO	CONDUIT SIZE	CONDUIT LGTH	WIRE NO.+SIZE	WIRE DESIGNATION
94	1¼"φ	8'	11#10	MB13, 14, 15 I76, 5, 42, 44 C80, 81, 73, 76
95	1¼"φ	4'	16#10	NL13, 14, 15, I69, 71, 5 C56, 52, 55, 51, 62, 61, 26, 23, 7, 8
96	1¼"φ		3#4	FSP1, 2, N
97	1¼"φ	AS REQ'D	11#10	WM12, 13, N, N, N, MP3, 4, ML2, N, PC3, N
98	2"φ	150'	38#10	G303, 304, 305, 306, 307, 403, 404 405, 406, 407 C23, 21 I5, 5, 28, 29, 30, 31 X2, 2, N, N, X5, 5, 6, 6, 7, 7, N, N X4, 4, N, N, X1, 2, X1, 2
99	1¼"φ	35'	14#10	G403, 404, 405, 406, 407 C23, 22 I5, 30, 31 X4, N, X1, 2
99A	2"φ	2'	14#10	G403, 404, 405, 406, 407 C23, 22 I5, 30, 31 X4, N, X1, 2
100		30'	3#10	X4, N, GNDTYPE SO CABLE
101	2"φ	2'	26#10	G303, 304, 305, 306, 307 C22, 21 I5, 28, 29 X2, 2, N, N, X5, 5, 6, 6, 7, 7, N, N X4, N, X1, 2
102	1¼"φ	2'	14#10	G303, 304, 305, 306, 307 C21, 22 I5, 28, 29 X4, N, X1, 2
103		30'	3#10	X4, N, GNDTYPE SO CABLE
104	1¼"φ	70'	12#10	X2, N, X2, N, X5, 6, 7, N, X5, 6, 7, N
105	1"φ	30'	4#10	X5, 6, 7, N
105A	2"φ	2'	4#10	X5, 6, 7, N
106	1"φ	2'	8#10	X2, N, X2, N, X5, 6, 7, N
107	2"φ	2'	4#10	X5, 6, 7, N
108	2"φ	500'	4#10	X2, N, X2, N
109	1¼"φ	30'	2#10	X2, N
110	2"φ	2'	2#10	X2, N
111	1"φ	2'	2#10	X2, N

RUN NO	CONDUIT SIZE	CONDUIT LGTH	WIRE NO.+SIZE	WIRE DESIGNATION
112	4"φ	24'	6#2	M40, 41, 42, MR400, 401, 402,
			11#10	EB40, 41, 42, FL40, 41, 42 CFL3, 4, MB40, 41, 42
113	2"φ	24'	42#10	C5, C5C, 14, 15, 29, 28, 10, 11, 119, 120 123, 124, 115, 116, 127, 131, 128, 129 130, 137, 148, 147, 139, 142 I5, 13, 14, 15, 16, 19, 20, 17, 18, 9, 27, 26 32, 35, 79, 80, 77, 78
114	4"φ	24'	6#2	M30, 31, 32, MR300, 301, 302,
			12#10	EB30, 31, 32, FL30, 31, 32 BL3, 4, N, MB30, 31, 32
115	2½"φ	24'	53#10	C5D, C5C, 13, 14, 27, 28, 9, 10 117, 118 121, 122, 114, 115, 127, 128, 129, 130 137, 138, 143, 155, 164, 165, 161, 162 154, 159, 146, 147, 144, 145, 151, 142 N, SP4, 5, 6 I5, 10, 11, 12, 19, 20, 17, 18, 9A, 9, 26 34, 33, 77, 78
116	2"φ	15'	19#10	C155, 164, 165, 161, 162, 154, 159, 146, 144 145, 151 SP4, 5, 6, N I5, 10, 11, 12
116A	1¼"φ	4'	15#10	C155, 164, 165, 161, 162, 154, 159, 146 144, 145, 151 I5, 10, 11, 12
117	2"φ	8'	11#10	EB30, 31, 32 C129, 130, 137, 138 I5, 19, 20, 33
118	1"φ	8'	3#10	BL3, 4, N
119	1"φ	8'	4#10	C5D, C5C I9A, I9
120	2"φ	8'	16#10	FL30, 31, 32 C27, 28, 9, 10, 117, 118, 121, 122, 127, 128 I5, 17, 18

NOTE:
FOR NOTES SEE SHEET E13.

E12

STATE OF LOUISIANA
DEPARTMENT OF HIGHWAYS

ELECTRICAL SYSTEM
TABULATION OF CONDUIT & WIRE-2
BAYOU DULARGE BRIDGE

MODJESKI AND MASTERS
CONSULTING ENGINEERS

DATE	DESCRIPTION	BY
	REVISIONS	

DATE: 11-17-74 | SCALE: NONE | DWG.NO: 182
DRAWN BY: RBA | CHKD. BY: JMS | IN CHARGE: TS | APPROVED:

AS-BUILT

ROUTE	STATE PROJECT	PARISH	SHEET NO.
LA. 315	245-03-41	TERREBONNE	183

255

RUN NO.	CONDUIT SIZE	CONDUIT LGTH	WIRE NO & SIZE	WIRE DESIGNATION
121	2"φ	8'	6#2	M30, 31, 32, MR300, 301, 302
122	1¼"φ	8'	11#10	MB30, 31, 32 C143, 146, 147, 142, I5, 34, 77, 78
123	1"φ	8'	6#10	C13, 14, 114, 115 I5, 26
124	1¼"φ	8'	11#10	EB33, 34, 35 C129, 130, 137, 138, I5, 19, 20, 33
125	1"φ	4'	6#10	EB30, 31, 32, 33, 34, 35
126	1"φ	4'	5#10	I5, N SP4, 5, 6
127	2"φ	8'	6#2	M33, 34, 35 MR300, 301, 302
128	2"φ	4'	6#2	M30, 31, 32, 33, 34, 35
129	1¼"φ	8'	11#10	MB33, 34, 35 C143, 146, 147, 142, I5, 34, 77, 78
130	1"φ	4'	6#10	MB30, 31, 32, 33, 34, 35
131	—	10'	6#10	BL3, 4, N, 3-SPARES TYPE SO CABLE
132	1¼"φ	4'	16#10	FL33, 34, 35, C27, 28, 9, 10, 117, 118, 121, 122, 127, 128 I5, 17, 18
133	1"φ	80'	6#10	BL3, 4, N BL3, 4, N
134	1"φ	10'	3#10	BL3, 4, N
135	1"φ	40'	3#10	BL3, 4, N
136		30'	3#10	BL3, 4, N TYPE ALS CABLE
137		30'	3#10	BL3, 4, N TYPE ALS CABLE
138		100'	3#10	BL3, 4, N TYPE ALS CABLE
139		30'	3#10	BL3, 4, N TYPE ALS CABLE
140	1¼"φ	8'	13#10	EB40, 41, 42, C127, 131, 130, 137 I5, 15, 16, 19, 20, 35
141	1"φ	8'	4#10	C5, 5C, I5, 9
142	2"φ	8'	6#2	M40, 41, 42, MR400, 401, 402
143	1¼"φ	8'	13#10	MB40, 41, 42 C148, 147, 139, 142 I79, 80, 32, 77, 78, 5
144	1¼"φ	8'	17#10	FL40, 41, 42 C23, 28, 11, 10, 119, 120, 123, 124, 128, 129 I13, 14, 17, 18
145	1"φ	8'	6#10	C15, 14, 116, 115 I27, 26
146	1¼"φ	8'	13#10	EB43, 44, 45 C127, 131, 130, 137 I5, 15, 16, 19, 20, 35
147	1"φ	4'	6#10	EB40, 41, 42, 43, 44, 45

RUN NO.	CONDUIT SIZE	CONDUIT LGTH	WIRE NO. & SIZE	WIRE DESIGNATION	
148	2"φ	8'	6#2	M43, 44, 45 MR400, 401, 402	
149	2"φ	4'	6#2	M40, 41, 42, 43, 44, 45	
150	1¼"φ	8'	13#10	MB43, 44, 45 C148, 147, 139, 142 I79, 80, 32, 77, 78, 5	
151	1"φ	4'	6#10	MB40, 41, 42, 43, 44, 45	
152	1¼"φ	4'	17#10	FL43, 44, 45 C29, 28, 11, 10, 119, 120, 123, 128, 129, 124 I13, 14, 17, 18	
153	5"φ		6#1	M40, 41, 42 MR400, 401, 402	CABLE AS SUPPLIED BY L.D.H. (6#7 AND 30#12)
			30#12	G403, 404, 405, 406, 407, CFL3, 4 BL3, 4, N I5, 10, 11, 12, 9A, 27, 34, 33, N 2-SPARES MB 40, 41, 42 EB 40, 41, 42 FL 40, 41, 42	
154	5"φ		6#1	FSP 1, 2, N 3-SPARES	
			30#12	C5, 15, 29, 23, 11, 119, 120, 123, 124, 131, 129, 142, 116, 127 I13, 14, 15, 16, 28, 29, 30, 31, 32, 35, SP4, 5, 6 1-SPARE I79, 80	
155	5"φ		6#1	M30, 31, 32, MR300, 301, 302	
			30#12	MB30, 31, 32, EB30, 31, 32, FL30, 31, 32 G303, 304, 305, 306, 307 5-SPARES X1, 2, 4, 5, 6, 7, N N, N, N, N	
156	5"φ		6#1	6-SPARES	
			30#12	C50, 13, 27, 21, 9, 117, 118, 121, 122, 143, 155, 148, 164, 165, 161, 162, 154, 146, 144, 145, 151, 139, 114, 138, 159, 5-SPARES	

NOTES:

1. ALL LENGTHS SHOWN ARE APPROXIMATE AND ARE NOT TO BE USED FOR COMPUTING QUANTITIES
2. CONTINUOUS EQUIPMENT GROUNDING CONDUCTOR SHALL BE PROVIDED THROUGHOUT THE ENTIRE ELECTRICAL SYSTEM UTILIZING THE CONDUIT SYSTEM
3. ALL CONDUIT AND WIRE RUNS AS SHOWN ON DWG. E11, E12 E13, ARE FOR GUIDANCE IN THE PREPARATION OF SHOP DRAWINGS REQUIRED UNDER LDH STANDARD SPECIFICATION 801.03(e). IT SHALL BE THE RESPONSIBILITY OF THE CONTRACTOR TO DESIGNATE ALL WIRES AS SHOWN ON THE APPROVED WIRING DIAGRAMS. ALL CONDUITS SHALL BE SIZED IN ACCORDANCE WITH THE NATIONAL ELECTRICAL CODE. ALL WIRES THAT TERMINATE IN JUNCTION BOXES SHALL BE PROPERLY DESIGNATED AS SHOWN ON THE APPROVED WIRING DIAGRAMS.

STATE OF LOUISIANA
DEPARTMENT OF HIGHWAYS

ELECTRICAL SYSTEM
TABULATION OF CONDUIT & WIRE-3
BAYOU DULARGE BRIDGE

E13

MODJESKI AND MASTERS
CONSULTING ENGINEERS

DATE	DESCRIPTION	BY
	REVISIONS	

DATE: 12-19-74 | SCALE: NONE | DWG. NO.:
DRAWN BY: R.B.A. | CHKD. BY: J.M.S. | IN CHARGE: T.S. | APPROVED:

ROUTE	STATE PROJECT	PARISH	SHEET NO.
LA. 315	245-03-41	TERREBONNE	184

356

CONTROL DESK NAMEPLATES

NO	NAMEPLATE LEGEND
1	CLOCK
2	MOTOR BRAKE NO. 4 HAND RELEASED
3	EMERGENCY BRAKE NO. 4 HAND RELEASED
4	EMERGENCY BRAKE NO. 3 HAND RELEASED
5	MOTOR BRAKE NO. 3 HAND RELEASED
6	TRACTION MOTOR NO. 4 AMMETER
7	TRAFFIC SIGNAL RED
8	CONTROL CIRCUIT
9	TRAFFIC SIGNAL AMBER
10	NORMAL POWER ON
11	EMERGENCY POWER SYSTEM
12	EMERGENCY POWER ON
13	FARSIDE LEAF FULLY SEATED
14	FARSIDE LEAF NEARLY SEATED
15	FARSIDE LEAF NEARLY RAISED
16	FARSIDE LEAF FULLY RAISED
17	FARSIDE LEAF AT MAXIMUM LIFT
18	LEAF POSITION INDICATOR
19	NEARSIDE LEAF FULLY SEATED
20	NEARSIDE LEAF NEARLY SEATED
21	NEARSIDE LEAF NEARLY RAISED
22	NEARSIDE LEAF FULLY RAISED
23	NEARSIDE LEAF AT MAXIMUM LIFT
24	TRACTION MOTOR NO. 1 AMMETER
25	MOTOR BRAKE NO. 2 HAND RELEASED
26	EMERGENCY BRAKE NO. 2 HAND RELEASED
27	EMERGENCY BRAKE NO. 1 HAND RELEASED
28	MOTOR BRAKE NO. 1 HAND RELEASED
29	VOLTMETER
30	VOLTMETER PHASE SELECTOR
31	UNASSIGNED
32	BYPASS NEARSIDE EMERGENCY BRAKE LIMIT SWITCHES
33	BYPASS NEARSIDE LOCK LIMIT SWITCHES
34	BYPASS NEARSIDE EMERGENCY BRAKE HAND RELEASED LIMIT SWITCHES
35	BYPASS NEARSIDE PLUNGER LIMIT SWITCHES
36	BYPASS SHEARLOCK LIMIT SWITCHES
37	BYPASS NEARSIDE LOCK LIMIT SWITCHES
38	BYPASS NEARSIDE GATE LIMIT SWITCHES
39	BYPASS NEARSIDE PLUNGER LIMIT SWITCHES
40	BYPASS NEARSIDE LOCK LIMIT SWITCHES
41	UNASSIGNED
42	BYPASS SHEARLOCK LIMIT SWITCHES
43	BYPASS FARSIDE LOCK LIMIT SWITCHES
44	BYPASS FARSIDE PLUNGER LIMIT SWITCHES
45	BYPASS FARSIDE GATE LIMIT SWITCHES
46	BYPASS FARSIDE LOCK LIMIT SWITCHES
47	BYPASS SHEARLOCK LIMIT SWITCHES
48	BYPASS FARSIDE PLUNGER LIMIT SWITCHES
49	BYPASS FARSIDE EMERGENCY BRAKES HAND RELEASE L.S.
50	BYPASS FARSIDE LOCK LIMIT SWITCHES
51	BYPASS FARSIDE EMERGENCY BRAKE LIMIT SWITCHES
52	UNASSIGNED
53	FARSIDE BRAKES HAND RELEASED
54	NEARSIDE BRAKES HAND RELEASED
55	FARSIDE MOTOR BRAKE HAND RELEASE LIMIT SWITCHES BYPASSED
56	FARSIDE MOTOR BRAKE NO. 4 LIMIT SWITCH BYPASSED
57	FARSIDE MOTOR BRAKE NO. 3 LIMIT SWITCH BYPASSED
58	FARSIDE TRACTION MOTORS OVERLOADED
59	FARSIDE MOTOR BRAKES OVERLOADED
60	FARSIDE EMERGENCY BRAKES OVERLOADED
61	FARSIDE LOCKS OVERLOADED
62	SHEARLOCKS OVERLOADED
63	NEARSIDE LOCKS OVERLOADED
64	NEARSIDE EMERGENCY BRAKES OVERLOADED
65	NEARSIDE MOTOR BRAKES OVERLOADED
66	NEARSIDE TRACTION MOTORS OVERLOADED
67	NEARSIDE MOTOR BRAKE NO. 2 LIMIT SWITCH BYPASSED
68	NEARSIDE MOTOR BRAKE NO. 1 LIMIT SWITCH BYPASSED
69	NEARSIDE MOTOR BRAKE HAND RELEASED LIMIT SWITCHES BYPASSED
70	UNASSIGNED
71	UNASSIGNED
72	BYPASS MOTOR BRAKE NO. 1 & NO. 2 HAND RELEASE LIMIT SWITCHES
73	BYPASS MOTOR BRAKE NO. 1 LIMIT SWITCH
74	BYPASS MOTOR BRAKE NO. 2 LIMIT SWITCH
75	NEARSIDE LEAF READY TO RAISE
76	NEARSIDE EMERGENCY BRAKES SET
77	NEARSIDE EMERGENCY BRAKE CONTROL SWITCH
78	NEARSIDE EMERGENCY BRAKES RELEASED
79	NEARSIDE LOCKS WITHDRAWN
80	NEARSIDE LOCKS CONTROL SWITCH
81	NEARSIDE LOCKS DRIVEN
82	SHEARLOCKS WITHDRAWN
83	SHEARLOCKS CONTROL SWITCH
84	SHEARLOCKS DRIVEN
85	FARSIDE LOCKS WITHDRAWN
86	FARSIDE LOCKS CONTROL SWITCH
87	FARSIDE LOCKS DRIVEN
88	FARSIDE EMERGENCY BRAKES RELEASED
89	FARSIDE EMERGENCY BRAKES CONTROL SWITCH
90	FARSIDE EMERGENCY BRAKES SET
91	FARSIDE LEAF READY TO RAISE
92	BYPASS MOTOR BRAKE NO. 3 LIMIT SWITCH
93	BYPASS MOTOR BRAKE NO. 4 LIMIT SWITCH
94	BYPASS MOTOR BRAKE NO. 3 & NO. 4 HAND RELEASE LIMIT SWITCHES
95	FARSIDE MOTOR BRAKES RELEASED
96	FARSIDE MOTOR BRAKES SET
97	FARSIDE POWER SEATING BRAKE SET
98	FARSIDE LEAF SEATING
99	BYPASS FARSIDE LEAF FULLY RAISED
100	FARSIDE OFF GOING GATE LOWERED
101	FARSIDE OFF GOING GATE CONTROL SWITCH (G4)
102	FARSIDE OFF GOING GATE RAISED
103	NEARSIDE ON COMING GATE LOWERED
104	NEARSIDE ON COMING GATE CONTROL SWITCH (G1)
105	NEARSIDE ON COMING GATE RAISED
106	FARSIDE ON COMING GATE LOWERED
107	FARSIDE ON COMING GATE CONTROL SWITCH (G3)
108	FARSIDE ON COMING GATE RAISED
109	NEARSIDE OFF GOING GATE LOWERED
110	NEARSIDE OFF GOING GATE CONTROL SWITCH (G2)
111	NEARSIDE OFF GOING GATE RAISED
112	NEARSIDE MOTOR BRAKES RELEASED
113	NEARSIDE MOTOR BRAKES SET
114	BYPASS NEARSIDE LEAF FULLY RAISED
115	NEARSIDE LEAF SEATING
116	NEARSIDE POWER SEATING BRAKE SET
117	UNASSIGNED
118	CONTROL DESK SERVICE LIGHT
119	SIGNAL HORN
120	NEARSIDE LEAF MASTER CONTROLLER
121	FARSIDE LEAF MASTER CONTROLLER
122	CHANNEL FLOOD LIGHTS
123	BYPASS NEARSIDE EXTREME LIFT LIMIT SWITCHES
124	BYPASS FARSIDE EXTREME LIFT LIMIT SWITCHES
125	NAVIGATION LIGHTS
126	TRACTION MOTOR NO. 2 AMMETER
127	TRACTION MOTOR NO. 3 AMMETER

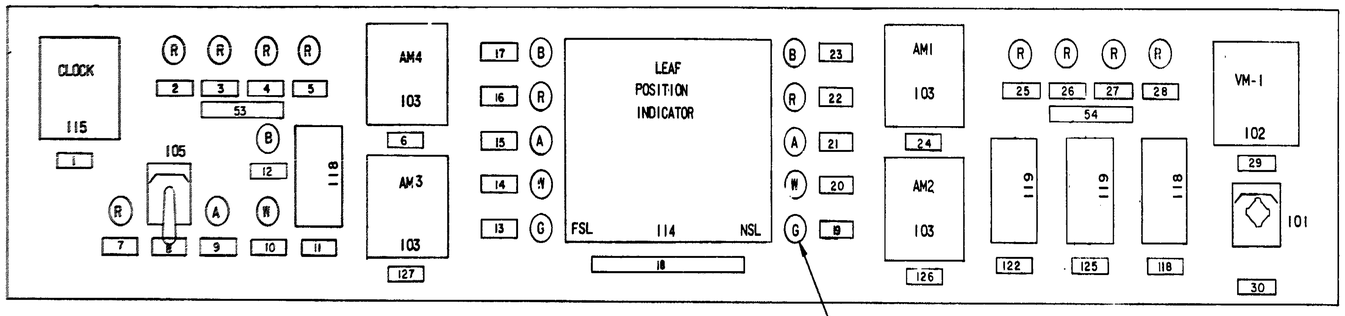

SLOPING BACK SECTION
SCALE: 3"=1'-0"

INDICATOR LIGHTS (ITEM 113)

STAINLESS STEEL ESCUTCHEON PLATE (SEE NOTE 3)

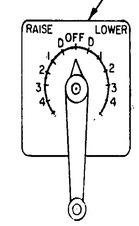

DRUM CONTROLLER OUTLINE
(ITEM 108)

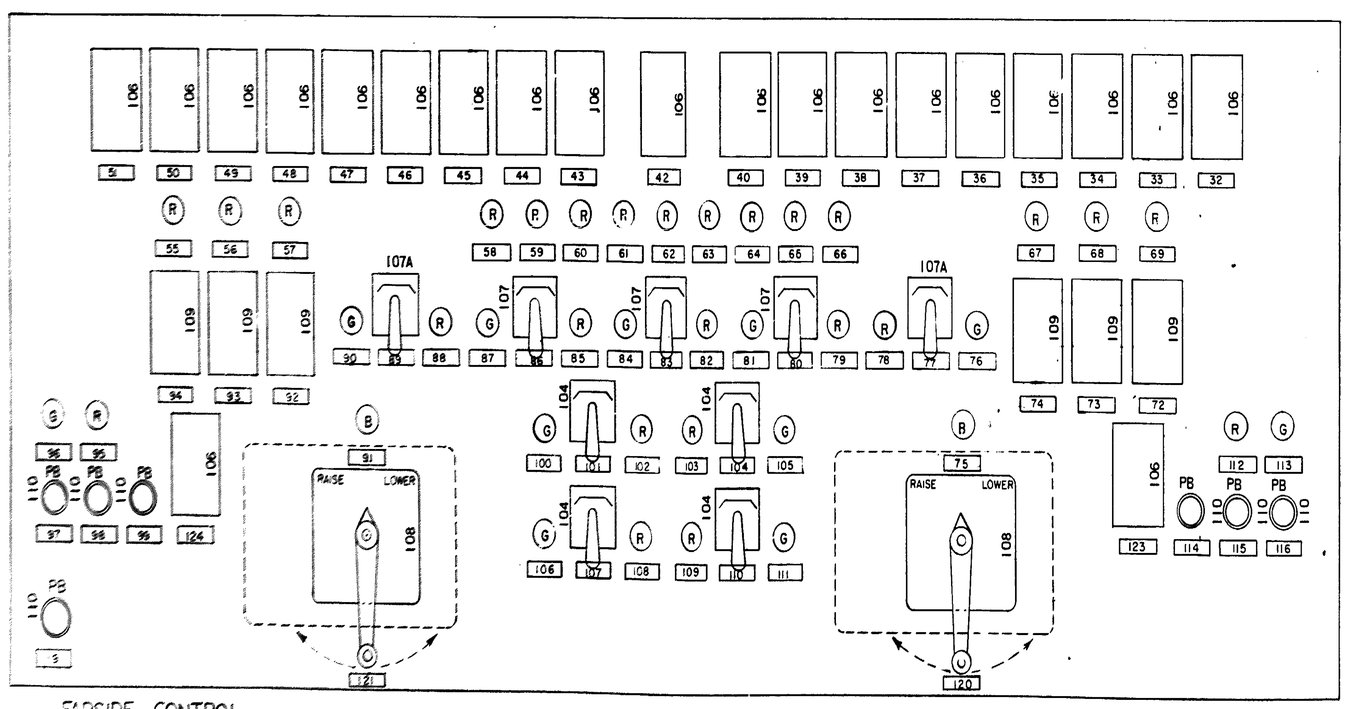

FARSIDE CONTROL

HORIZ. TOP SECTION
SCALE: 3"=1'-0"

NEARSIDE CONTROL

NOTES:

1. ALL NAME PLATES SHALL BE OF SATIN BLACK OUTER LAYERS, WHITE INNER LAYERS PHENOL PLATE ENGRAVING STOCK LAMACOID, OR EQUAL, 1/16" THICK WITH 45° BEVELED EDGES AND LETTERS 3/16" IN HEIGHT. NAME PLATES SHALL BE LIMITED TO TWO LINES.
2. FOR FURTHER DETAILS OF CONTROL DESK SEE DWG. NO. E15 & E16.
3. DRUM CONTROLLER OFF & DRIFT POSITIONS SHALL HAVE POSITIVE STOPS.
4. FOR TERMINAL BLOCK SPECIFICATIONS SEE DWG. NO. E16.
5. ALL TERMINAL BLOCKS SHOWN AND NOT DESIGNATED SHALL BE INSTALLED AS SPARE UNTIL USED.
6. FOR TERMINAL BLOCK DETAILS SEE DWG. E20.

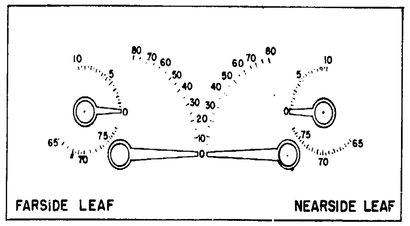

LEAF POSITION INDICATOR
SCALE: 3"=1'-0"
(ITEM 114)

E14

STATE OF LOUISIANA
DEPARTMENT OF HIGHWAYS

ELECTRICAL SYSTEM
CONTROL DESK LAYOUT
BAYOU DULARGE BRIDGE

MODJESKI AND MASTERS
CONSULTING ENGINEERS

DATE	DESCRIPTION	BY
	REVISIONS	

DATE: 7-15-74 | SCALE: AS NOTED | DWG.NO.: 184
DRAWN BY: GAS | CHKD. BY: JMS | IN CHARGE: TS | APPROVED:

ROUTE	STATE PROJECT	PARISH	SHEET NO.
LA. 315	245-03-41	TERREBONNE	185

357

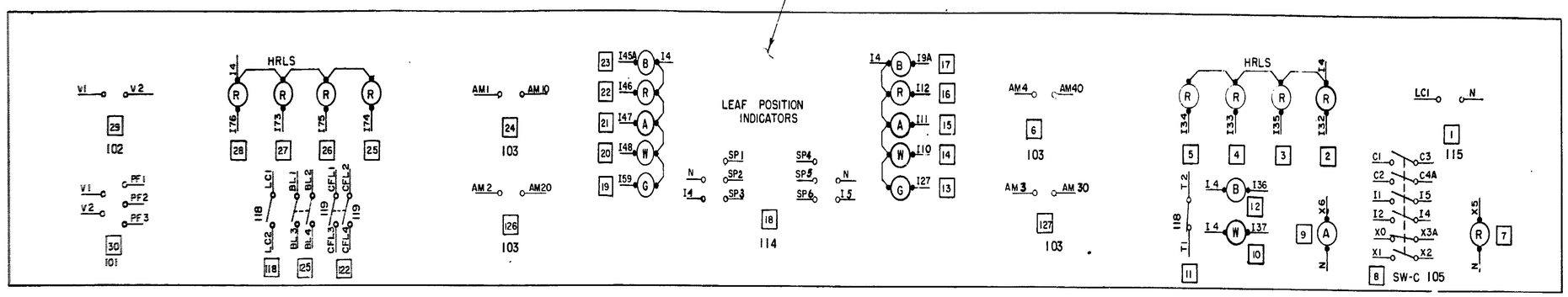

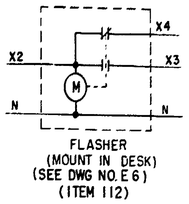

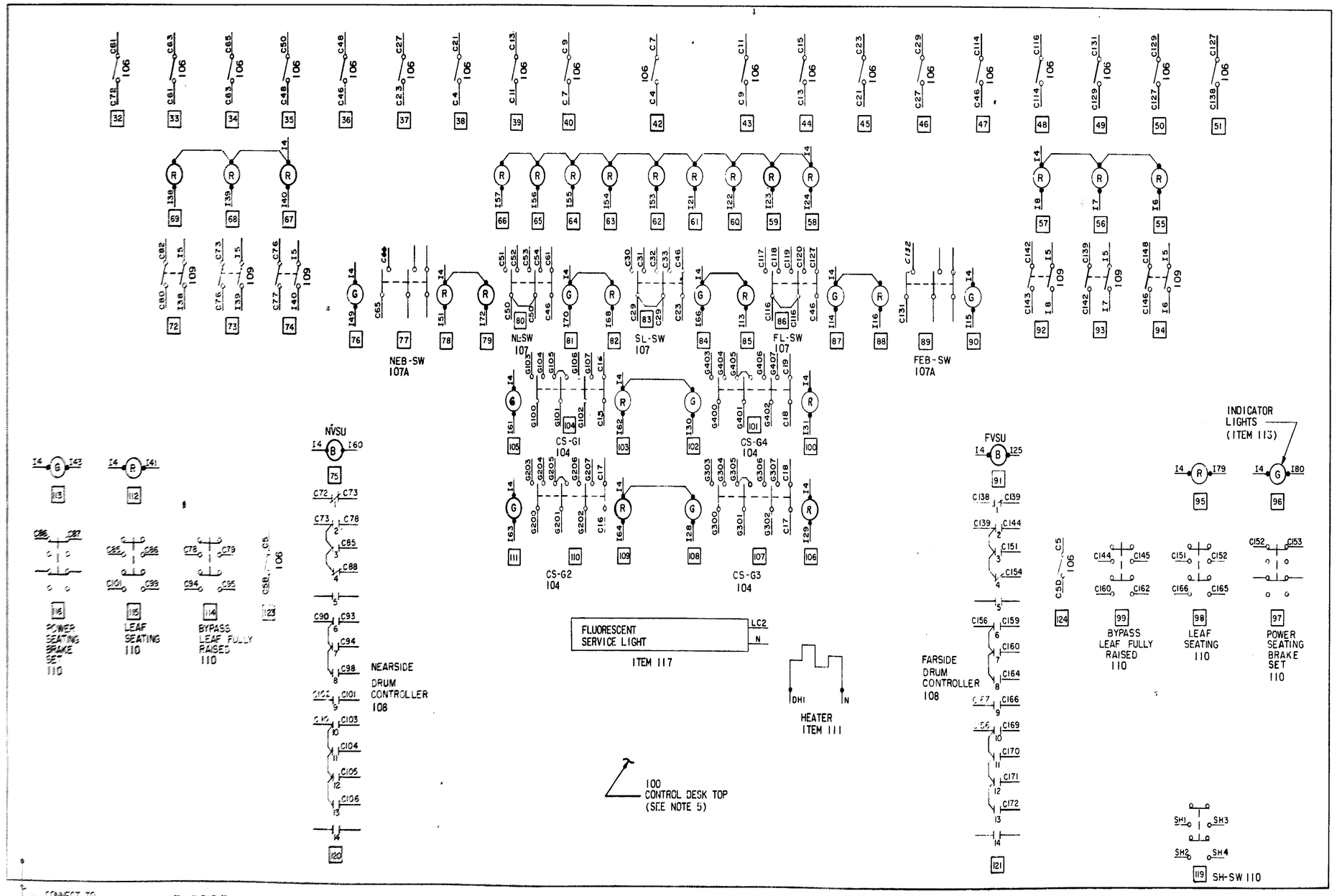

NOTES:

1. ALL SWITCH CONTACTS ARE SHOWN IN THEIR NORMAL POSITION CORRESPONDING TO THE NORMAL POSITION OF THE BRIDGE, THAT IS CLOSED TO NAVIGATION TRAFFIC, AND OPEN TO HIGHWAY TRAFFIC WITH MAIN BUS ENERGIZED FROM INCOMING POWER SOURCE.
2. FOR WIRING CIRCUIT OF CLOCK AND FLUORESCENT LIGHT IN DESK SEE DWG. NO. E8.
3. FOR FURTHER DETAILS OF CONTROL DESK SEE DWG. NO. E14 & E16.
4. FOR DETAIL CIRCUITRY OF CONTROL AND INDICATOR WIRING SEE DWG. NO. E4, E5 & E6.
5. VIEWS SHOWN ON THIS SHEET ARE SHOWN LOOKING AT DESK TOP FROM BOTTOM.
6. ALL WIRE ENDS SHALL BE IDENTIFIED AS SHOWN ON THE WIRING DIAGRAMS.
7. ALL WIRE ENTERING AND IN CONTROL DESK SHALL BE PLACED IN NEAT COMPACT WELL SUPPORTED BUNDLES FROM ORIGIN TO TERMINAL POINT, WITH NYLON CABLE TIES AND STRAPS OR APPROVED EQUAL.
8. FOR TERMINAL BLOCK LAYOUT OF CONTROL DESK SEE DWG. E20.

E15

STATE OF LOUISIANA
DEPARTMENT OF HIGHWAYS

ELECTRICAL SYSTEM
CONTROL DESK WIRING CONNECTION
BAYOU DULARGE BRIDGE

MODJESKI AND MASTERS
CONSULTING ENGINEERS

DATE	DESCRIPTION	BY
	REVISIONS	

DATE: 7-15-74 | SCALE: NONE | DWG. NO.: 185
DRAWN BY: JMS | CHKD. BY: HAE | IN CHARGE: TS | APPROVED:

⏚ – CONNECT TO GROUND BUS

NEARSIDE CONTROL

42 = INDICATES NAMEPLATE NO ON CONTROL DESK SEE DWG NO E14.

FARSIDE CONTROL

ROUTE	STATE PROJECT	PARISH	SHEET NO.
LA. 315	245-03-41	TERREBONNE	186

358

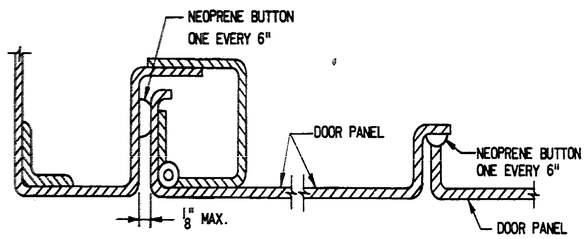

DOOR FORMING AND HINGE DETAIL

SCALE: NONE

(ITEM 100 & 200)

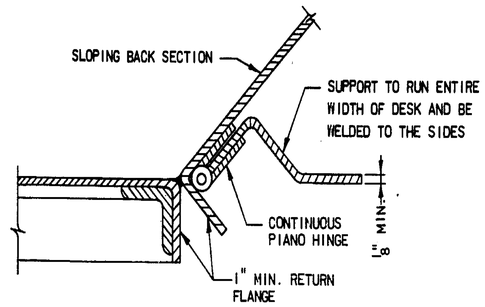

SLOPING BACK SECTION HINGE DETAIL

SCALE: NONE

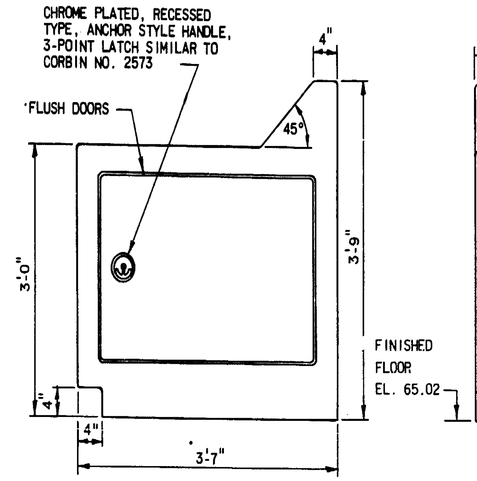

SIDE VIEW

SCALE: 1"=1'-0"

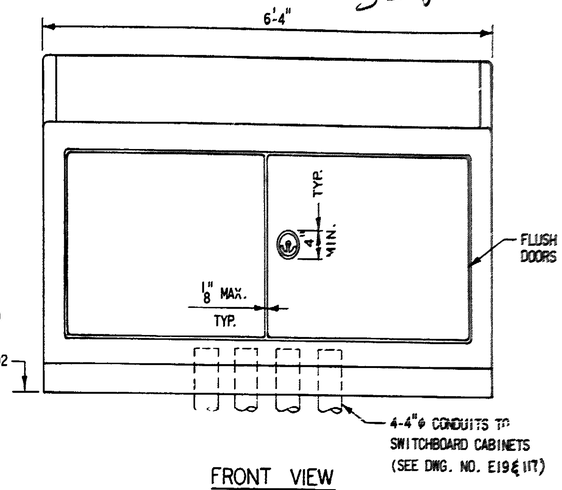

FRONT VIEW

SCALE: 1"=1'-0"

CONTROL DESK & DETAILS

(ITEM 100)

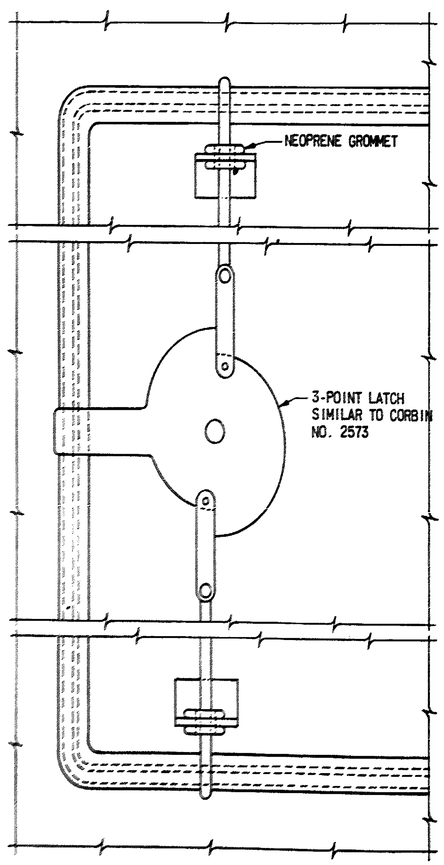

DOOR LATCH DETAIL

SCALE: NONE

(ITEM 100 & 200)

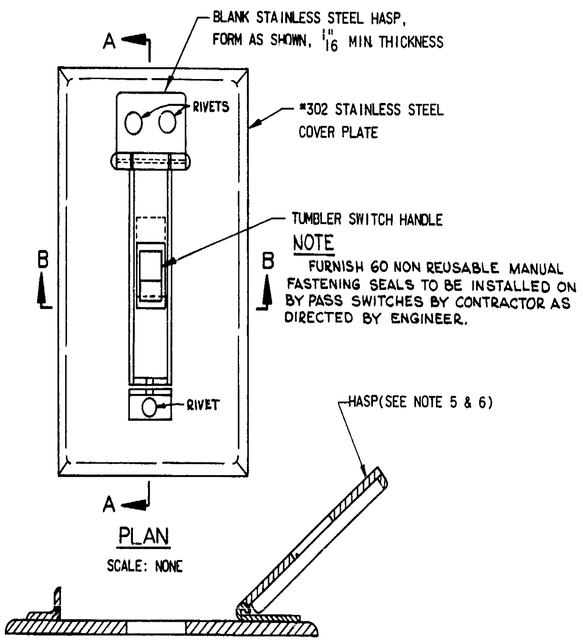

PLAN

SCALE: NONE

SECTION A-A

SCALE: NONE

NOTE:

1. HASP IS SHOWN IN OPEN POSITION.

NOTE

FURNISH 60 NON REUSABLE MANUAL FASTENING SEALS TO BE INSTALLED ON BY PASS SWITCHES BY CONTRACTOR AS DIRECTED BY ENGINEER.

SECTION B-B

SCALE: NONE

BY-PASS COVER PLATE HINGE DETAILS

(ITEMS 106 & 109)

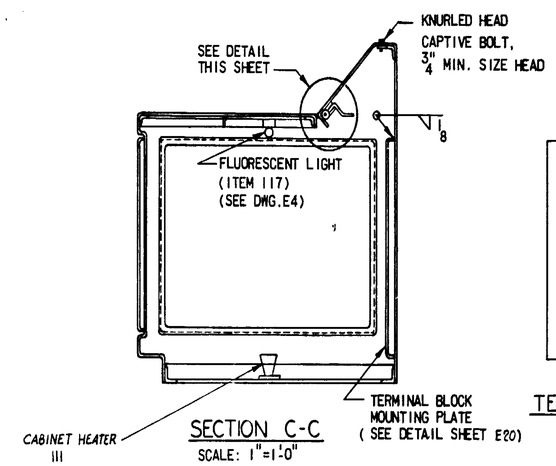

SECTION C-C

SCALE: 1"=1'-0"

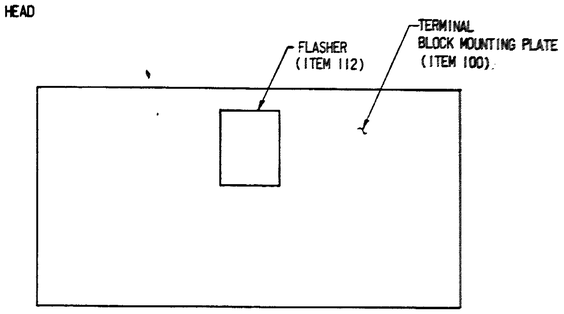

TERMINAL BLOCK MOUNTING PLATE DETAIL

SCALE: 1"=1'-0"

(ITEM 100)

NOTES:

1. FOR CONTROL DESK LAYOUT SEE SHEET E14.
2. ALL EQUIPMENT SHALL BE AS SHOWN OR THE APPROVED EQUAL.
3. FOR OTHER DETAILS OF CONTROL DESK SEE SHEETS E14 & E15
4. TERMINAL BLOCK SHALL BE BUCHANAN NO. B1125, 600V, 12-CIRCUIT HIGH PRESSURE TYPE BOX CONNECTORS.
5. HASP TO BE STAINLESS STEEL AND UNDERSIDE TO BE RED.
6. WHEN OPEN, HASP WILL BE APPROXIMATELY 45° WITH THE DESK TOP ABOVE THE SWITCH AND WILL SHOW THE RED UNDERSIDE.

SPECIFICATIONS: (ITEM 100)

THE CONTROL DESK SHALL BE CONSTRUCTED OF NO. 11 GAGE SHEET STEEL, SUPPORTED BY AN ANGLE IRON FRAME, WELDED TO FORM A UNIT OF SUBSTANTIAL CONSTRUCTION. THE TOP OF THE DESK SHALL BE OF STEEL FABRICATED IN TWO SECTIONS, HORIZ. TOP SECTION, AND SLOPING BACK SECTION. THE HORIZ. SECTION SHALL BE FORMED OF ONE PIECE AND WELDED CONTINUOUSLY ALL AROUND. THE SLOPING BACK SECTION SHALL BE FASTENED TO THE FRONT SECTION BY A CONTINUOUS CONCEALED HINGE, AND SHALL BE SO ARRANGED THAT WHEN THE KNURLED HEAD BOLTS ARE LOOSENED, IT MAY BE TILTED FORWARD GIVING ACCESS TO THE APPARATUS AND CONNECTIONS THEREON. CONCEALED STOPS SHALL BE PROVIDED TO PREVENT THE SLOPING SECTION FROM STRIKING ANY APPARATUS ON THE TOP SECTION. ALL WELDS AND CORNERS SHALL BE WELL GROUND AND ROUNDED TO PROVIDE SMOOTH SURFACES. ALL METAL SURFACES, INSIDE AND OUT, SHALL BE BLASTED TO COMMERCIAL BLAST FINISH IN ACCORDANCE WITH THE STEEL STRUCTURES PAINTING COUNCIL SPECIFICATION SP-6-63 DATED NOV. 1, 1963 AND SHALL HAVE A CORROSION RESISTANT PRIMER FOLLOWED BY TWO COATS OF SEA MIST GREEN BAKED-ON AUTOMOTIVE ACRYLIC ENAMEL INSIDE AND OUT. THE ENAMEL SHALL BE SHERWIN WILLIAMS, DITZLER, OR APPROVED EQUAL. ALL EXPOSED METAL HARDWARE AND FITTINGS SHALL BE CHROME PLATED OR STAINLESS STEEL. ALL EQUIPMENT ON THE DESK SHALL BE FLUSH MOUNTED EXCEPT THE METERS AND CLOCK WHICH MAY BE SEMI-FLUSH MOUNTED. THE FRONT AND SIDES SHALL BE FITTED WITH FLUSH TYPE DOORS MOUNTED ON CONCEALED EASILY REMOVABLE HINGES AND HELD CLOSED BY THREE POINT LATCHES HAVING CHROME PLATED, RECESSED TYPE, ANCHOR STYLE HANDLES. THE DESK SHALL BE BACK WIRED WITH N.E.C. TYPE SIS SWITCHBOARD WIRE, AWG NO. 12 UNLESS OTHERWISE SHOWN. ALL WIRE SHALL BE TAPED AND CLEATED INTO NEAT, COMPACT, WELL SUPPORTED BUNDLES AND TERMINATED ON PROPERLY IDENTIFIED HIGH PRESSURE CONNECTOR TYPE TERMINAL BLOCKS WITH NOT MORE THAN TWO CONDUCTORS PER TERMINAL BLOCK CONNECTOR. TERMINAL IDENTIFICATION, AS SHOWN ON THE ELEMENTARY WIRING DIAGRAMS, SHALL BE ENGRAVED ON TERMINAL BLOCK MARKING STRIPS AND SHOWN BY WIRE MARKERS ON ALL CONDUCTORS. BEFORE SHIPMENT, THE MANUFACTURER SHALL BE REQUIRED TO TEST THE CONTROL DESK IN COMBINATION WITH THE SWITCHBOARD FOR OPERATING SEQUENCE OF DEVICES AND ABILITY TO WITHSTAND OPERATING VOLTAGES AND CURRENTS IN ACCORDANCE WITH NEMA STANDARDS.

THE CONTROL DESK SHALL BE CRATED IN A SOLID CRATE, LESS THE DOORS, AND SHALL BE CUSHIONED INSIDE THE CRATE TO PREVENT DAMAGE DURING SHIPMENT. THE DOORS SHALL BE WELL CUSHIONED, SOLIDLY CRATED SEPARATE FROM THE CONTROL DESK, AND SHALL NOT BE INSTALLED UNTIL DIRECTED BY THE ENGINEER.

THE CONTROL DESK SHALL BE SPRAYED WITH A STRIPPABLE VINYL PROTECTION COATING AS MANUFACTURED BY THE SPRAY-ON INDUSTRIAL PRODUCTS CO., BRADFORD HEIGHTS, OHIO, AFTER INSPECTION IS PERFORMED AND APPROVED. THE COATING SHALL NOT BE REMOVED UNTIL DIRECTED BY THE ENGINEER.

E16

STATE OF LOUISIANA
DEPARTMENT OF HIGHWAYS

ELECTRICAL SYSTEM
CONTROL DESK CONSOLE DETAILS
BAYOU DULARGE BRIDGE

MODJESKI AND MASTERS
CONSULTING ENGINEERS

DATE	DESCRIPTION	BY
	REVISIONS	

DATE: 7-15-74 | SCALE: AS NOTED | DWG.NO.: 186
DRAWN BY: GAS | CHKD.BY: JMS | IN CHARGE: TS | APPROVED:

359

ROUTE	STATE PROJECT	PARISH	SHEET NO.
LA 315	245-03-41	TERREBONNE	187

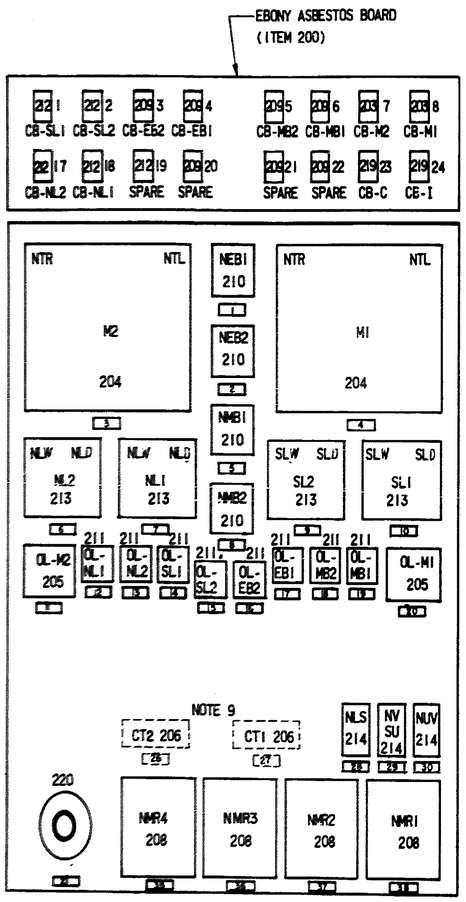

NEARSIDE PANEL ARRANGEMENT

SCALE: $1\frac{1}{2}$"=1'-0"

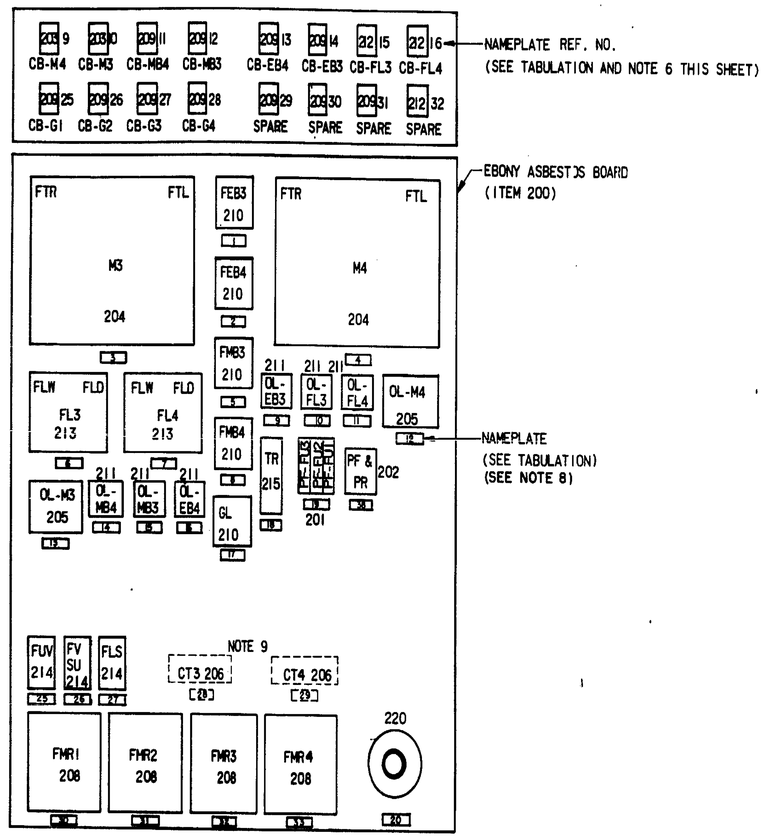

FARSIDE PANEL ARRANGEMENT

SCALE: $1\frac{1}{2}$"=1'-0"

NEARSIDE SWITCHBOARD NAMEPLATES

NO	NAMEPLATE LEGEND	
1	CONTACTOR NEARSIDE EMERGENCY BRAKE NO. 1	(NEB1)
2	CONTACTOR NEARSIDE EMERGENCY BRAKE NO. 2	(NEB2)
3	CONTACTOR REVERSING TRACTION MOTOR NO. 2	(NTR-NTL)
4	CONTACTOR REVERSING TRACTION MOTOR NO. 1	(NTR-NTL)
5	CONTACTOR NEARSIDE MOTOR BRAKE NO. 1	(NMB1)
6	CONTACTOR REVERSING NEARSIDE LOCK NO. 2	(NLD-NLW)
7	CONTACTOR REVERSING NEARSIDE LOCK NO. 1	(NLD-NLW)
8	CONTACTOR NEARSIDE MOTOR BRAKE NO. 2	(NMB2)
9	CONTACTOR REVERSING SHEARLOCK NO. 2	(SLD-SLW)
10	CONTACTOR REVERSING SHEARLOCK NO. 1	(SLD-SLW)
11	OVERLOAD TRACTION MOTOR NO. 2	(OL-M2)
12	OVERLOAD NEARSIDE LOCK NO. 1	(OL-NL1)
13	OVERLOAD NEARSIDE LOCK NO. 2	(OL-NL2)
14	OVERLOAD SHEARLOCK NO. 1	(OL-SL1)
15	OVERLOAD SHEARLOCK NO 2	(OL-SL2)
16	OVERLOAD NEARSIDE EMERGENCY BRAKE NO. 2	(OL-EB2)
17	OVERLOAD NEARSIDE EMERGENCY BRAKE NO. 1	(OL-EB1)
18	OVERLOAD NEARSIDE MOTOR BRAKE NO. 2	(OL-MB2)
19	OVERLOAD NEARSIDE MOTOR BRAKE NO. 1	(OL-MB1)
20	OVERLOAD TRACTION MOTOR NO. 1	(OL-M1)
21	*SWITCHBOARD CABINET HEATER	
22	UNASSIGNED	
23	UNASSIGNED	
24	UNASSIGNED	
25	UNASSIGNED	
26	CURRENT TRANSFORMER-CT2	(AM2)
27	CURRENT TRANSFORMER-CT1	(AM1)
28	NEARSIDE LEAF SEATING RELAY	(NLS)
29	NEARSIDE VOLTAGE STEP-UP RELAY	(NVSU)
30	NEARSIDE UNDER VOLTAGE RELAY	(NUV)
31	UNASSIGNED	
32	UNASSIGNED	
33	UNASSIGNED	
34	UNASSIGNED	
35	NEARSIDE MOTOR RELAY 4	(NMR4)
36	NEARSIDE MOTOR RELAY 3	(NMR3)
37	NEARSIDE MOTOR RELAY 2	(NMR2)
38	NEARSIDE MOTOR RELAY 1	(NMR1)

FARSIDE SWITCHBOARD NAMEPLATES

NO	NAMEPLATE LEGEND	
1	CONTACTOR FARSIDE EMERGENCY BRAKE NO. 3	(FEB3)
2	CONTACTOR FARSIDE EMERGENCY BRAKE NO. 4	(FEB4)
3	CONTACTOR REVERSING TRACTION MOTOR NO. 3	(FTR-FTL)
4	CONTACTOR REVERSING TRACTION MOTOR NO. 4	(FTR-FTL)
5	CONTACTOR FARSIDE MOTOR BRAKE NO. 3	(FMB3)
6	CONTACTOR REVERSING FARSIDE LOCK NO. 3	(FLW-FLD)
7	CONTACTOR REVERSING FARSIDE LOCK NO. 4	(FLW-FLD)
8	CONTACTOR FARSIDE MOTOR BRAKE NO. 4	(FMB4)
9	OVERLOAD FARSIDE EMERGENCY BRAKE NO. 3	(OL-EB3)
10	OVERLOAD FARSIDE LOCK NO. 3	(OL-FL3)
11	OVERLOAD FARSIDE LOCK NO. 4	(OL-FL4)
12	OVERLOAD TRACTION MOTOR NO. 4	(OL-M4)
13	OVERLOAD TRACTION MOTOR NO. 3	(OL-M3)
14	OVERLOAD FARSIDE MOTOR BRAKE NO. 4	(OL-MB4)
15	OVERLOAD FARSIDE MOTOR BRAKE NO. 3	(OL-MB3)
16	OVERLOAD FARSIDE EMERGENCY BRAKE NO. 4	(OL-EB4)
17	CONTACTOR TRAFFIC GATES	(GL)
18	TRAFFIC SIGNAL RELAY	(TR)
19	PHASE FAILURE & REVERSAL FUSES, 6 AMP. - 600V	
20	SWITCHBOARD CABINET HEATER	
21	UNASSIGNED	
22	UNASSIGNED	
23	UNASSIGNED	
24	UNASSIGNED	
25	FARSIDE UNDER VOLTAGE RELAY	(FUV)
26	FARSIDE VOLTAGE STEP-UP RELAY	(FVSU)
27	FARSIDE LEAF SEATING RELAY	(FLS)
28	CURRENT TRANSFORMER-CT3	(AM3)
29	CURRENT TRANSFORMER-CT4	(AM4)
30	FARSIDE MOTOR RELAY 1	(FMR1)
31	FARSIDE MOTOR RELAY 2	(FMR2)
32	FARSIDE MOTOR RELAY 3	(FMR3)
33	FARSIDE MOTOR RELAY 4	(FMR4)
34	UNASSIGNED	
35	UNASSIGNED	
36	UNASSIGNED	
37	UNASSIGNED	
38	PHASE FAILURE & REVERSAL RELAY	(PF & PR)

CIRCUIT BREAKER NAMEPLATES

(SEE NOTE 6)

NO	NAMEPLATE LEGEND	
1	SHEARLOCK NO. 1	(SL1)
2	SHEARLOCK NO. 2	(SL2)
3	NEARSIDE EMERGENCY BRAKE NO. 2	(EB2)
4	NEARSIDE EMERGENCY BRAKE NO. 1	(EB1)
5	NEARSIDE MOTOR BRAKE NO. 2	(MB2)
6	NEARSIDE MOTOR BRAKE NO. 1	(MB1)
7	TRACTION MOTOR M2	(M2)
8	TRACTION MOTOR M1	(M1)
9	TRACTION MOTOR M4	(M4)
10	TRACTION MOTOR M3	(M3)
11	FARSIDE MOTOR BRAKE NO. 4	(MB4)
12	FARSIDE MOTOR BRAKE NO. 3	(MB3)
13	FARSIDE EMERGENCY BRAKE NO. 4	(EB4)
14	FARSIDE EMERGENCY BRAKE NO. 3	(EB3)
15	FARSIDE LOCK NO. 3	(FL3)
16	FARSIDE LOCK NO. 4	(FL4)
17	NEARSIDE LOCK NO. 2	(NL2)
18	NEARSIDE LOCK NO. 1	(NL1)
19	SPARE	
20	SPARE	
21	SPARE	
22	SPARE	
23	CONTROL CIRCUIT	(C)
24	INDICATOR LIGHT CIRCUIT	(I)
25	NEARSIDE ON-COMING GATE	(G1)
26	NEARSIDE OFF-GOING GATE	(G2)
27	FARSIDE ON-COMING GATE	(G3)
28	FARSIDE OFF-GOING GATE	(G4)
29	SPARE	
30	SPARE	
31	SPARE	
32	SPARE	

NOTES:

1. FOR TERMINAL BLOCK SPECIFICATIONS SEE ITEM NO. 217 DWG. E21. & ITEM 216
2. FOR WIRING OF SWITCHBOARDS SEE DWG. E18.
3. FOR CONTROL CIRCUIT NOMENCLATURE SEE DWG. NO. E4.
4. ALL CIRCUIT BREAKERS SHOWN AND DESIGNATED SPARE SHALL BE INSTALLED AND MARKED SPARE UNTIL USED. (ITEM 209 & 212)
5. FOR LOCATION OF MOTOR RESISTORS(207) SEE DWG. NO. E18 & E19.
6. NAMEPLATES FOR CIRCUIT BREAKERS ARE LOCATED ON OUTSIDE OF SWITCHBOARD CABINET DOORS SEE DWG. NO. E19. (ITEM 200)
7. FOR TERMINAL BOARD DETAILS OF SWITCHBOARDS SEE DWG. E21.
8. ALL NAME PLATES SHALL BE OF SATIN BLACK OUTER LAYERS, WHITE INNER LAYERS PHENOL PLATE ENGRAVING STOCK LAMACOID, OR EQUAL, $\frac{1}{16}$" THICK WITH 45° BEVELED EDGES AND LETTERS $\frac{3}{16}$" IN HEIGHT. NAME PLATES SHALL BE LIMITED TO TWO LINES.
9. ITEMS 206 SHALL BE MOUNTED ON BACKSIDE OF SWITCHBOARD SEE DWG. E19.

E17

STATE OF LOUISIANA
DEPARTMENT OF HIGHWAYS

ELECTRICAL SYSTEM
SWITCHBOARD EQUIPMENT LAYOUT
BAYOU DULARGE BRIDGE

MODJESKI AND MASTERS
CONSULTING ENGINEERS

DATE	DESCRIPTION	BY
	REVISIONS	

DATE: 7-15-74 | SCALE: AS NOTED | DWG.NO. 187
DRAWN BY: GAS | CHKD.BY: JMS | IN CHARGE: TS | APPROVED:

ROUTE	STATE PROJECT	PARISH	SHEET NO.
L.A. 315	245-03-41	TERREBONNE	188

360

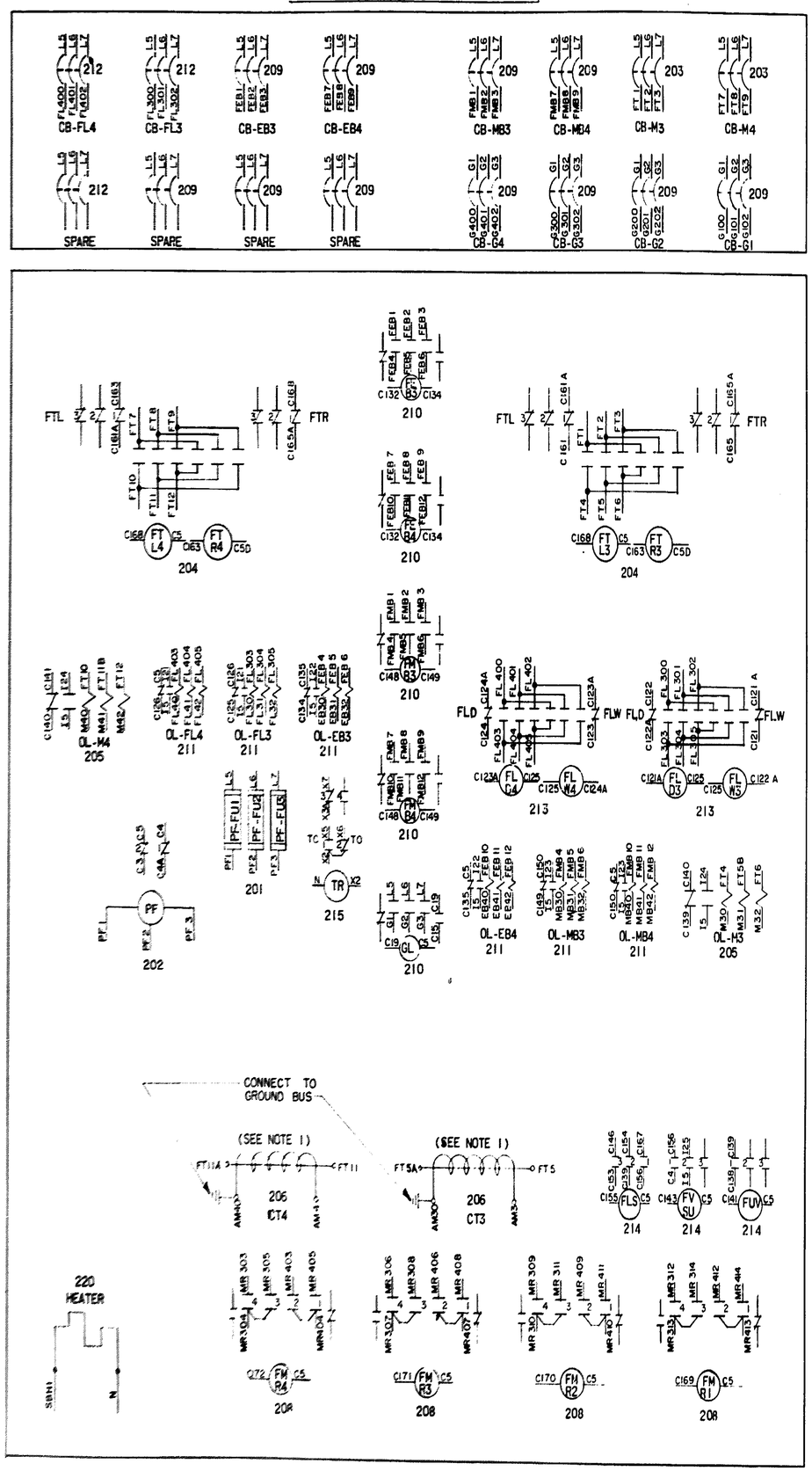

REAR VIEW
FARSIDE SWITCHBOARD

SBL1 SBL2
SD

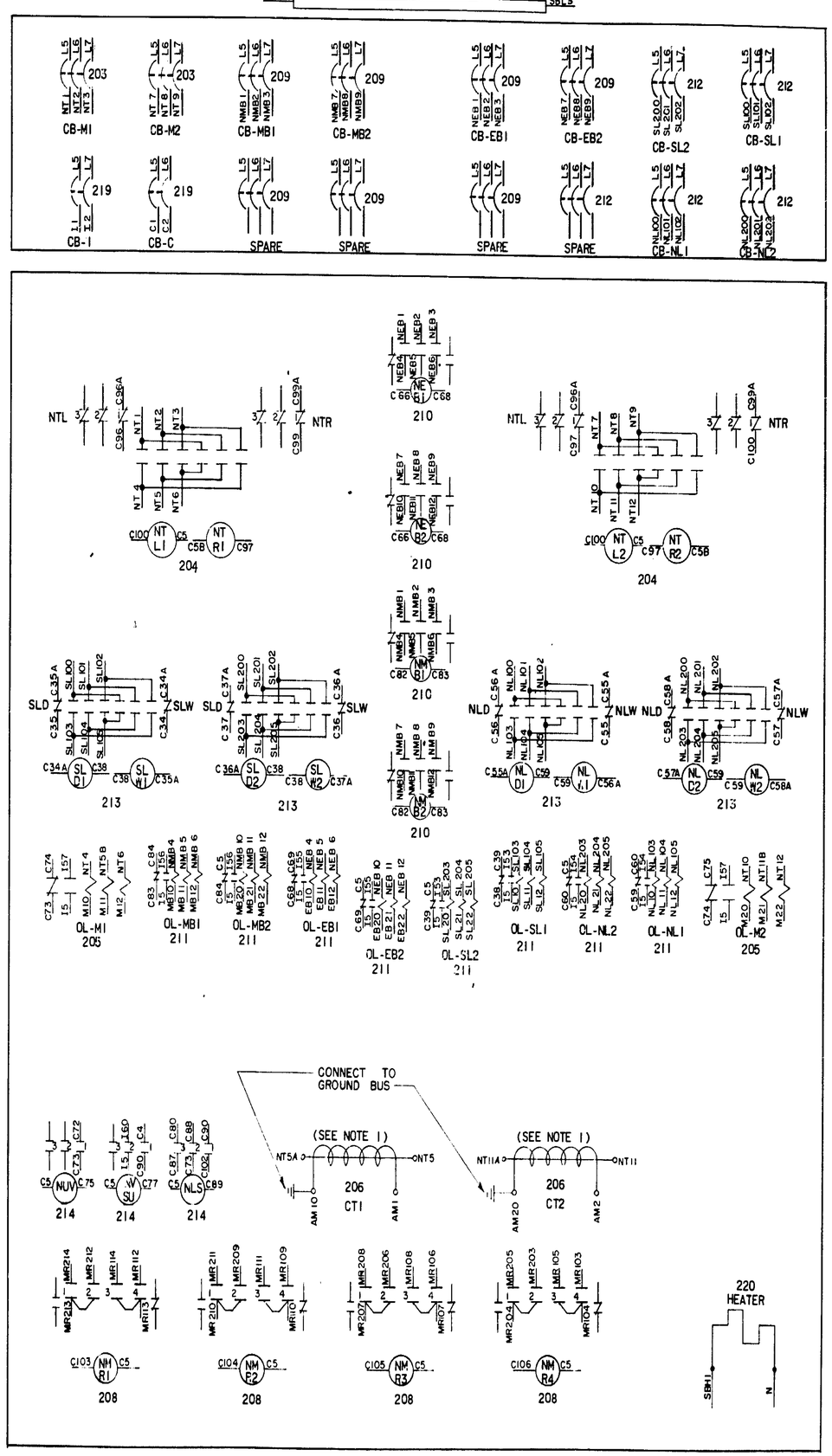

REAR VIEW
NEARSIDE SWITCHBOARD

SBL1 SBL3
SD

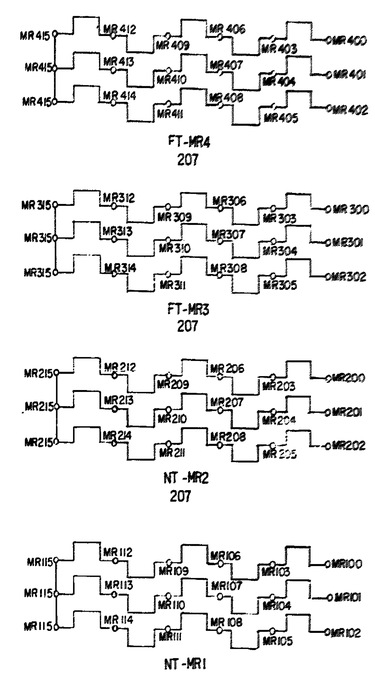

MOTOR RESISTOR SETS

(SEE NOTE 4)
(ITEM 207)

NOTE:

1. CURRENT TRANSFORMER SHALL BE MOUNTED ON BACK SIDE OF SWITCHBOARD.
2. ALL EQUIPMENT SHALL BE AS SHOWN ON DWG. E21. OR APPROVED EQUAL.
3. FOR FURTHER DETAILS OF SWITCHBOARDS SEE DWG. NO. E17 & E19.
4. FOR LOCATION OF MOTOR RESISTORS IN SWITCHBOARD CABINETS SEE DWG. NO. E19.
5. ALL CIRCUIT BREAKERS SHOWN AND DESIGNATED SPARE SHALL BE INSTALLED AND MARKED SPARE UNTIL USED.
6. ALL WIRE ENDS SHALL BE IDENTIFIED AS SHOWN ON THE WIRING DIAGRAMS.
7. ALL WIRES ON SWITCHBOARDS SHALL BE PLACED IN NEAT COMPACT WELL SUPPORTED BUNDLES FROM TERMINAL POINT TO TERMINAL POINT WITH NYLON CABLE TIES AND STRAPS OR APPROVED EQUAL.
8. FOR TERMINAL BLOCK LAYOUT OF SWITCHBOARD SEE DWG. E21.
9. ALL SWITCH CONTACTS ARE SHOWN IN THEIR NORMAL POSITION CORRESPONDING TO THE NORMAL POSITION OF THE BRIDGE; THAT IS, CLOSED TO NAVIGATION TRAFFIC AND OPEN TO HIGHWAY TRAFFIC WITH MAIN BUS ENERGIZED FROM INCOMING POWER SOURCE.

E18

STATE OF LOUISIANA
DEPARTMENT OF HIGHWAYS

ELECTRICAL SYSTEM
SWITCHBOARD WIRING CONNECTIONS
BAYOU DULARGE BRIDGE

MODJESKI AND MASTERS
CONSULTING ENGINEERS

DATE	DESCRIPTION	BY
	REVISIONS	

DATE: 8-28-74 | SCALE: 3"=1'0" | DWG.NO.: 188
DRAWN BY: JMS | CHKD.BY: HAE | IN CHARGE: TS | APPROVED:

ROUTE	STATE PROJECT	PARISH	SHEET NO.
LA. 315	245-03-41	TERREBONNE	189

361

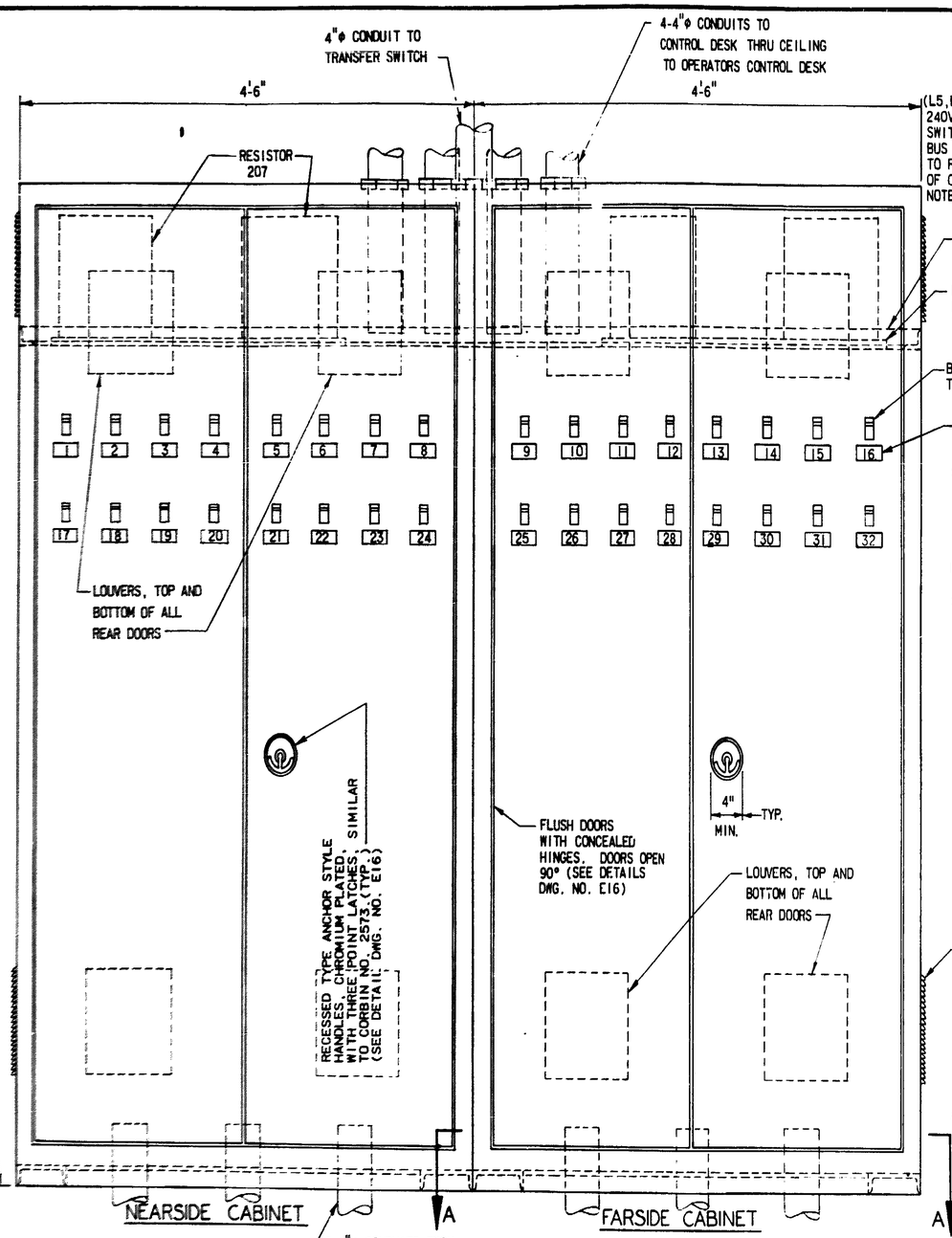

SWITCHBOARD CABINET DETAILS

SCALE: $1\frac{1}{2}$"=1'-0" (ITEM 200)

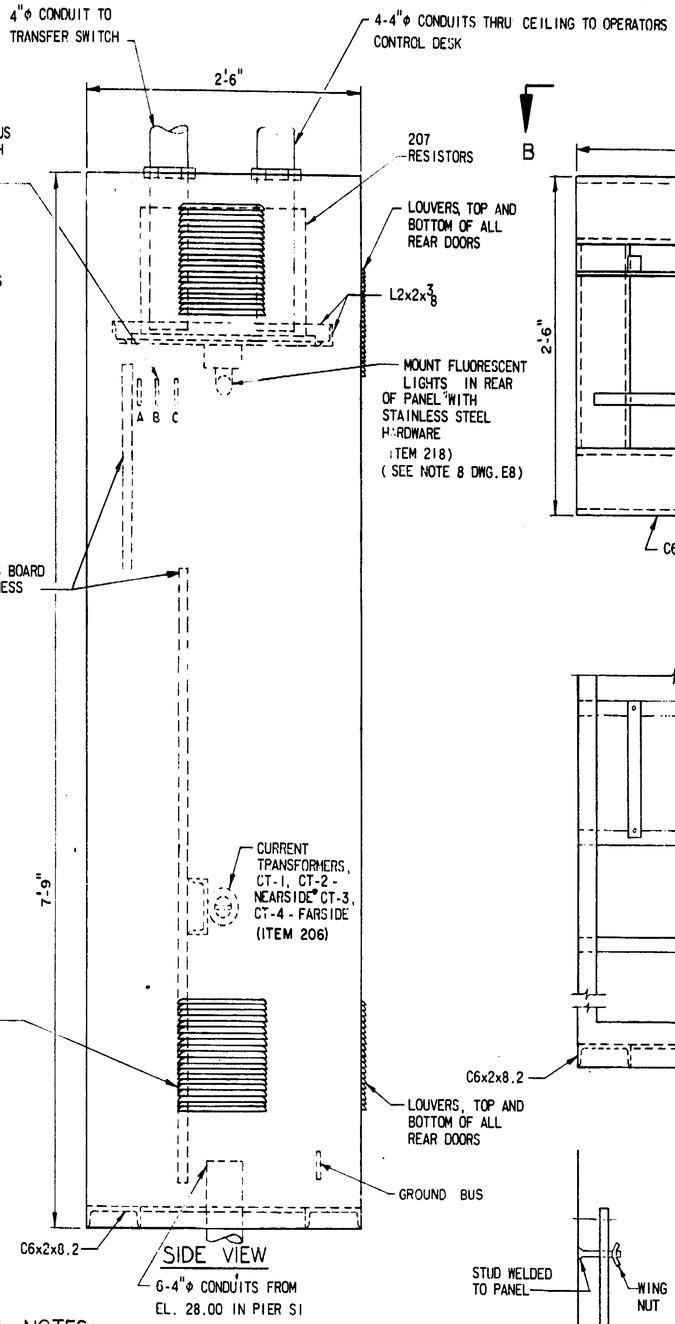

SIDE VIEW

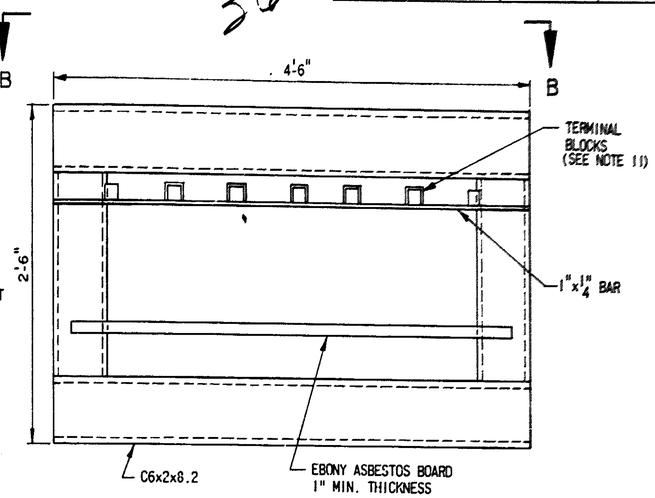

SECTION A-A

SCALE: $1\frac{1}{2}$"=1'-0"

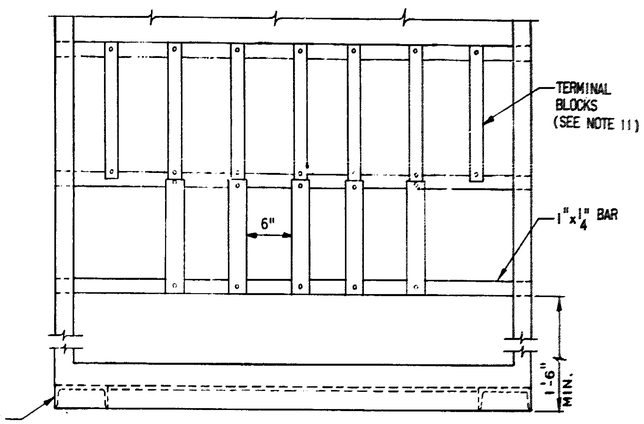

VIEW B-B

SCALE: $1\frac{1}{2}$"=1'-0"

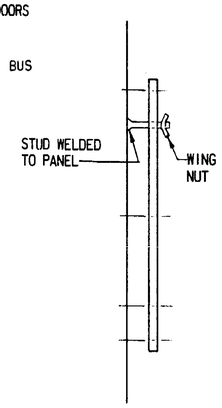

SECTION C-C

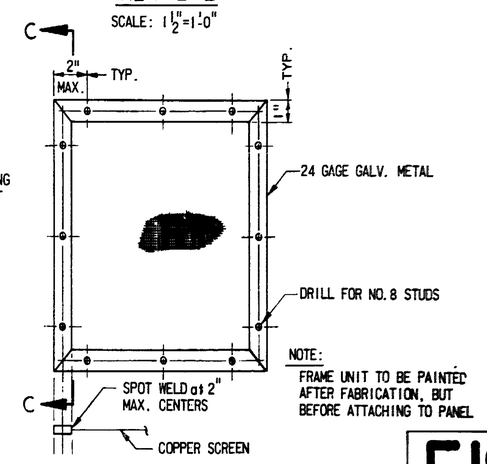

NOTE:
FRAME UNIT TO BE PAINTED AFTER FABRICATION, BUT BEFORE ATTACHING TO PANEL

LOUVER SCREEN DETAILS

SCALE: 3"=1'-0"

SPECIFICATIONS: (ITEM 200)

THE SWITCHBOARD SHALL BE ASSEMBLED ON DULL BLACK FINISHED EBONY ASBESTOS BOARD, NOT LESS THAN 1" THICK, SUPPORTED ON AN ANGLE IRON FRAME AND ENCLOSED IN AN 11 GAGE SHEET STEEL CABINET. THE NEARSIDE CABINET SHALL BE OPEN ON THE RIGHT END AND THE FARSIDE CABINET SHALL BE OPEN ON THE LEFT END SO THEY CAN BE BOLTED TOGETHER AT THE BRIDGE SITE. THE CABINET SHALL HAVE FLUSH TYPE DOUBLE DOORS, BOTH FRONT AND REAR. THE DOORS SHALL HAVE CHROMIUM PLATED, RECESSED TYPE ANCHOR STYLE HANDLES WITH THREE POINT LATCHES, AND ARE TO BE MOUNTED ON CONCEALED, EASILY REMOVABLE HINGES. THE DOORS SHALL BE FITTED WITH NEOPRENE BUTTONS AROUND THE OUTER EDGES TO PREVENT NOISE DUE TO VIBRATION. DOOR LATCH RODS SHALL BE RUN THROUGH NEOPRENE GROMMETS. COPPER SCREEN BACK LOUVERED OPENINGS SHALL BE PROVIDED AT THE TOP AND BOTTOM IN BOTH ENDS & IN ALL REAR DOORS.

ALL METAL SURFACES, INSIDE AND OUT, SHALL BE BLASTED TO COMMERCIAL BLAST FINISH IN ACCORDANCE WITH THE STEEL STRUCTURES PAINTING COUNCIL SPECIFICATION SP-6-63 DATED NOV.1,1963, AND SHALL HAVE A CORROSION RESISTANT PRIMER FOLLOWED BY TWO COATS OF SEA MIST GREEN BAKED-ON AUTOMOTIVE ACRYLIC ENAMEL INSIDE AND OUT. THE ENAMEL SHALL BE SHERWIN WILLIAMS, OR APPROVED EQUAL. CIRCUIT BREAKERS SHALL BE MOUNTED SO AS TO BE OPERABLE THROUGH THE CLOSED FRONT DOORS. THE CURRENT TRANSFORMERS SHALL BE MOUNTED ON ANGLE IRON BRACKETS ON THE REAR OF THE PANEL. THE SWITCHBOARD SHALL BE BACK WIRED WITH N.E.C. TYPE SIS SWITCHBOARD WIRE, AWG NO.12 (MINIMUM SIZE). THE SWITCHBOARD MANUFACTURER SHALL FURNISH ALL CONDUCTORS, EQUIPMENT AND HARDWARE REQUIRED TO BOLT AND WIRE THE UNITS TOGETHER AT THE BRIDGE SITE. ALL FACTORY INSTALLED JUMPERS ON EQUIPMENT THAT ARE NOT TYPE SIS SHALL BE REMOVED AND REPLACED WITH TYPE SIS WIRE. ALL WIRE SHALL BE TAPED OR LACED AND FORMED INTO NEAT, COMPACT, WELL SUPPORTED BUNDLES, AND TERMINATED ON PROPERLY IDENTIFIED HIGH PRESSURE CONNECTOR TYPE TERMINAL BLOCKS WITH NOT MORE THAN TWO CONDUCTORS PER TERMINAL BLOCK CONNECTOR. TERMINAL IDENTIFICATION, AS SHOWN ON THE ELEMENTARY WIRING DIAGRAMS, SHALL BE ENGRAVED ON TERMINAL BLOCK STRIPS AND SHOWN BY WIRE MARKERS ON ALL CONDUCTORS. TERMINAL BLOCKS SHALL BE MOUNTED IN THE REAR OF THE PANEL NEAR THE BOTTOM IN A VERTICAL POSITION AND SHALL HAVE APPROXIMATELY 6" SPACES BETWEEN THEM. BEFORE SHIPMENT, THE MANUFACTURER SHALL BE REQUIRED TO TEST THE SWITCHBOARD IN COMBINATION WITH THE CONTROL DESK, FOR OPERATION SEQUENCE OF DEVICES AND ABILITY TO WITHSTAND OPERATING VOLTAGES AND CURRENTS IN ACCORDANCE WITH NEMA STANDARDS. THE ENGINEER SHALL BE GIVEN AMPLE NOTICE BEFORE THESE TESTS ARE RUN SO THAT HE MAY OR MAY NOT, AT HIS OPTION, ARRANGE TO HAVE AN OBSERVER PRESENT TO WITNESS THE TESTS AND INSPECT THE SWITCHBOARD. THE SWITCHBOARD, DOORS SHALL BE SEPARATELY CRATED IN A SOLID, WELL CUSHIONED CRATE TO PREVENT DAMAGE DURING SHIPMENT. THE DOORS SHALL NOT BE INSTALLED UNTIL DIRECTED BY THE ENGINEER.

THE SWITCHBOARD SHALL BE SPRAYED WITH A STRIPPABLE VINYL PROTECTIVE COATING AS MANUFACTURED BY THE SPRAY-ON INDUSTRIAL PRODUCTS CO. BRADFORD HEIGHTS, OHIO. AFTER INSPECTION IS PERFORMED AND APPROVED; THE COATING SHALL NOT BE REMOVED UNTIL DIRECTED BY THE ENGINEER.

GENERAL NOTES:

1. THERE SHALL BE NO EXPOSED HARDWARE ON SWITCHBOARD EXCEPT NAMEPLATE MOUNTING BOLTS.
2. ALL WELDS SHALL BE CONTINUOUS, AND ALL CORNERS SHALL BE ROUNDED AND GROUND SMOOTH.
3. ALL EQUIPMENT SHALL BE AS SHOWN OR APPROVED EQUAL.
4. MARKING STRIPS OF TERMINAL BLOCKS SHALL BE ENGRAVED WITH THE PROPER IDENTIFICATION AS SHOWN ON THE ELEMENTARY WIRING DIAGRAMS.
5. FOR DOOR FORMING, HINGE, AND LATCH DETAILS SEE SHEET E16.
6. COPPER SCREEN BACKED LOUVERED OPENINGS SHALL BE PROVIDED IN BOTH ENDS, ALL REAR DOORS AT BOTH TOP AND BOTTOM.
7. THE TOP SHALL BE WELDED TO THE CABINET.
8. FOR TERMINAL BLOCK DESIGNATORS SEE DWG.NO. E21.
9. FOR FURTHER DETAILS SEE DWG.NO. E17 AND E18.
10. FOR FURTHER DETAILS OF CONDUITS SEE DWG. NO. E2.
11. FOR TERMINAL BLOCK SPECIFICATIONS SEE NOTE 1 ON DWG. NO.E17.
12. SERVICE CONDUCTORS L5,L6 & L7 SHALL RUN DIRECTLY TO THE 240V,3φ,60 HZ SWITCHBOARD POWER BUS WITHOUT THE USE OF TERMINAL BLOCKS.(SEE NOTE 5 DWG.E1 AND E9).
13. ALL WIRES ENTERING SWITCHBOARD CABINETS SHALL BE PLACED IN NEAT COMPACT WELL SUPPORTED BUNDLES FROM ENTRANCE TO TERMINAL POINT WITH NYLON CABLE TIES AND STRAPS OR APPROVED EQUAL.

E19

STATE OF LOUISIANA
DEPARTMENT OF HIGHWAYS

ELECTRICAL SYSTEM
SWITCHBOARD CABINET DETAILS
BAYOU DULARGE BRIDGE

MODJESKI AND MASTERS
CONSULTING ENGINEERS

DATE	DESCRIPTION	BY
	REVISIONS	

DATE: 7-15-74 | SCALE: AS NOTED | DWG.NO.: 189
DRAWN BY: GAS | CHKD.BY: JMS | IN CHARGE: TS | APPROVED:

362

ROUTE	STATE PROJECT	PARISH	SHEET NO.
LA.315	245-03-41	TERREBONNE	190

ITEM NO.	QUAN.	NAME	SERVICE	MANUFACTURER	TYPE, MODEL, CAT. NO.	RATING AND DESCRIPTION
100	1	DESK, CONSOLE CONTROL	ENCLOSURE FOR OPERATORS CONTROL EQUIPMENT		AS SPECIFIED	SEE DWG.NO.E16 FOR DETAILS AND SPECIFICATIONS
101	1	SWITCH, VOLTMETER SELECTOR	SELECT PHASE VOLTAGE	GENERAL ELECTRIC	MODEL NO. 16SBICF11	600V, 20A, 3Φ, PHASE TO PHASE, KNURLED HANDLE STANDARD ESCUTCHEON
102	1	VOLTMETER (VM-1)	READ BUS VOLTAGE PHASE TO PHASE	GENERAL ELECTRIC	TYPE AB40	0-300 VOLTS-CONVENTIONAL SCALE
103	4	AMMETER (AM-1 THRU AM-4)	READ LINE CURRENT	GENERAL ELECTRIC	TYPE AB40	0-200 AMPS/5 AMP., SECONDARY 200/5CT CONVENTIONAL SCALE
104	4	SWITCH, CONTROL	OPERATE TRAFFIC GATES	GENERAL ELECTRIC	TYPE SB-9 (SEE DWG.NO. E3)	600V,20A, 6-STAGE, DOUBLE BREAK MOTOR REVERSING WITH CLOSED CONTACTS IN ONE (1) STAGE AT THE "OFF" POSITION LARGE PISTOL GRIP HANDLE WITH ESCUTCHEON MARKED "RAISE-OFF-LOWER"
105	1	SWITCH, CONTROL (SW-C)	ENERGIZE LEAF CONTROL AND TRAFFIC SIGNAL CIRCUITS	GENERAL ELECTRIC	TYPE SB-9 (SEE DWG.NO. E4, E6 & E15)	600V, 20A, 6-STAGE DOUBLE BREAK WITH CLOSED CONTACTS IN ONE STAGE AT THE "OFF" POSITIIN. LARGE PISTOL GRIP HANDLE WITH ESCUTCHEON MARKED "ON-OFF" FOR CCW THROW OFF CENTERED ON 12 O'CLOCK.
106	21	SWITCH	BYPASS INTERLOCKING, LIGHTS AND GENERATOR START SWITCH (TEST)	GENERAL ELECTRIC	GE 5951-2	SPST, 250V, 20A, 2HP RATING WITH SPECIAL HINGED LOCK COVER SEE DETAILS DWG.NO. E16.
107	3	SWITCH, CONTROL	WITHDRAW AND DRIVE LOCKS	GENERAL ELECTRIC	TYPE SB-9 (SEE DWG.NO. E15)	600V, 20A, 3-STAGE DOUBLE BREAK WITH CLOSED CONTACTS IN ONE (1) STAGE AT "OFF" POSITION, LARGE PISTOL GRIP HANDLE WITH ESCUTCHEON MARKED "WITHDRAW-OFF-DRIVE." *"OFF" IN CENTER POSITION.*
107A	2	SWITCH, CONTROL	RELEASE AND SET EMERGENCY (SPARE) BRAKES	GENERAL ELECTRIC	TYPE SB-9 (SEE DWG. NO. E15)	SAME AS ITEM 107 EXCEPT ESCUTCHEON MARKED "SET-RELEASE." AND THE SET POSITION LOCATED AT 12 O'CLOCK
108	2	CONTROLLER, DRUM	RAISE AND LOWER BASCULE LEAF	GENERAL ELECTRIC	SIMILAR IC3202-AR77D1 FOR DUPLEX REVERSING CONTROL OF 25HP WOUND ROTOR MOTORS (2 MOTORS PARALLELED)	230V, 60HP, 150A, CONTINUOUS 190A INTERMITTENT. 5-POINTS EACH DIRECTION WITH DRIFT POINT FOR CONTROL LIMIT SWITCH PROTECTION- ROTOR OPEN CIRCUIT 220 VOLTS AT STANDSTILL- 60 AMPS MAX. FULL LOAD CURRENT - POSITIVE STOPS FOR "OFF" & "DRIFT" POSITIONS - HEATERS AS SPECIFIED BY MANUFACTURER.
109	6	SWITCH, BYPASS	BYPASS MOTOR BRAKE LIMIT SWITCH AND HAND RELEASE LIMIT SWITCH	GENERAL ELECTRIC	GE 5952-2	DPST, 250V, 20A, 2HP RATING WITH SPECIAL HINGED LOCK-COVER SEE DWG.NO. E16.
110	7	SWITCH, PUSH BUTTON	SIGNAL HORN AND SEATING AUXILIARY FUNCTIONS	GENERAL ELECTRIC	CR2940-UA203B	DUPLEX DPDT, 240V, 30 AMP MOMENTARY MAKE, 10 AMP CARRY
111	1	HEATER, CONTROL DESK	DESK AMBIENT TEMP. CONTROL	CHROMALOX	TYPE SCB CODE NO 253850	EDISON SCREW BASE TYPE 120 V, 150 WATT WITH EDISON SCREW TYPE MTG. BASE AND ALL MOUNTING HARDWARE
112	1	FLASHER	FLASH GATE ARM LIGHTS	CROUSE-HINDS	TF2-TL1950 -WITH TF2-TL1950 BASE	2-CIRCUIT, 120V, 10 AMP CAM OPERATED FOR ALTERNATE FLASHING 12" GATE ARM LIGHTS - MOUNT INSIDE DESK (SEE DWG. NO. E16)
113	61	LIGHT, INDICATOR	VISUAL INDICATORS OF LEAF FUNCTIONS	DIAL LIGHT CO.		37 RED #51901-11-1 13 GREEN #51901-11-2 3 AMBER #51901-11-3 5 BLUE #51901-11-4 3 WHITE #51901-11-5 240 VOLT PILOT LIGHT ASSEMBLIES, 1" MTG. HOLE BINDING SCREW TERMINALS SCREW BASE, ASSEMBLIES TO BE COMPLETE WITH 10-WATT LAMPS, CONVEX LENS BACK FROSTED INCLUDE 25-SPARE LAMPS AND 4 LAMP REMOVERS, 1-#L-73 LAMP INSTALLER
114	1	SELSYN INDICATOR LEAF POSITION	VISUAL INDICATION OF SPAN POSITION	HENSCHEL CORP.	CAT. NO.37-123 INDICATOR TO BE WORKED WITH ITEM 318 SELSYN POSITION TRANSMITTERS	DOUBLE LEAF BASCULE BRIDGE POSITION INDICATOR COMPRISED OF 2 SEPARATE SYNCHRO RECEIVERS EACH DRIVEN BY ITS OWN TRANSMITTER, MAIN AND VERNIER POINTER WITH CONVENTIONAL TYPE DIAL SHALL BE MARKED AS SHOWN ON DWG.NO. E14 GEAR RATIOS SHALL BE AS RECOMMENDED BY THE MANUFACTURER TO ACCOMMODATE TO AN INPUT SHAFT ROTATION OF 350° FOR A MAXIMUM OF 75° LEAF MOVEMENT
115	1	CLOCK	TIME REFERENCE	SUNSHINE SCIENTIFIC INST. CO.	TYPE AB40 NO. 31A	120 V, 60 HZ AC, GE TYPE AB40 CASE S.S. KNOB
116	35	BLOCKS, TERMINAL	WIRING INTERCONNECTIONS	BUCHANAN	NO. B112S	600V, 12-CIRCUITS, HIGH PRESSURE BOX CONNECTOR
117	1	LIGHT, SERVICE	ILLUMINATE WIRING COMPARTMENT	GENERAL ELECTRIC	STANDARD FLUORESCENT STRIP	NOMINAL 48" LENGTH 40 WATTS. T-12 LAMP 120V INSTANT START WHITE
118	2	SWITCH	POWER TRANSFER, DESK SERVICE LIGHT	GENERAL ELECTRIC	GE 5951-2	SPST, 250V, 20 A, 2 HP RATING WITH STAINLESS STEEL COVER PLATE
119	2	SWITCH	CHANNEL LIGHTS NAVIGATION LIGHTS	GENERAL ELECTRIC	GE 5952-2	DPST, 250V, 20A, 2 HP RATING WITH STAINLESS STEEL COVER PLATE

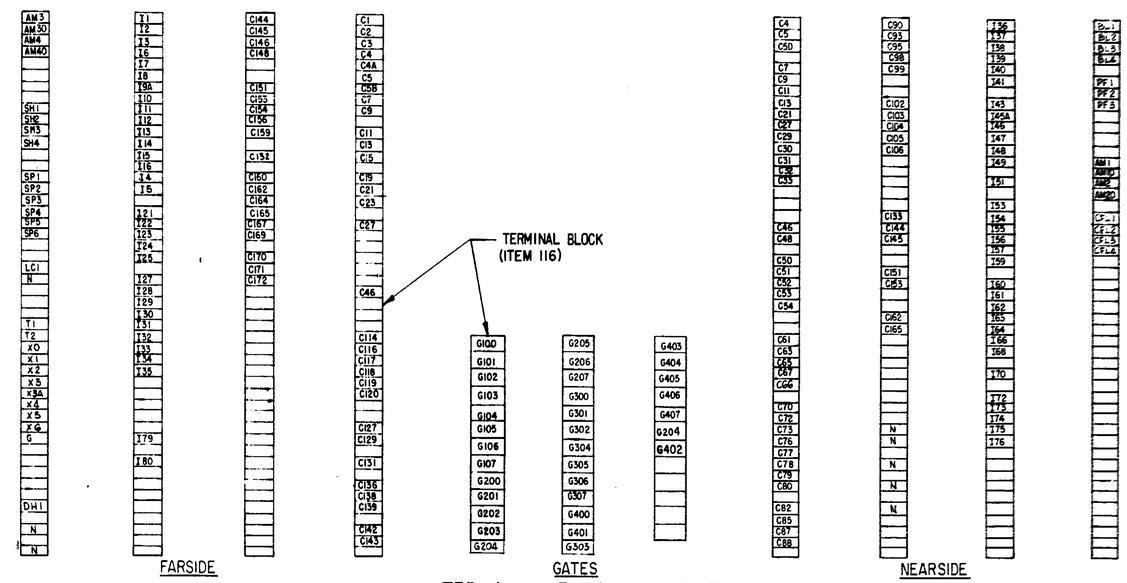

TERMINAL BLOCK LAYOUT
CONTROL DESK
SCALE: NONE

NOTE:

1. ALL TERMINAL BLOCKS AND WIRE ENDS SHALL BE IDENTIFIED AS SHOWN ON THE WIRING DIAGRAM.
2. ALL TERMINAL BLOCKS SHOWN AND NOT DESIGNATED SHALL BE INSTALLED *AS SPARE* UNTIL USED.
3. ALL ITEMS LISTED ON THIS SHEET ARE FOR CONTROL DESK ONLY. SEE DWG. E14, E15 & E16 FOR DETAILS.
4. THE CONTACTOR SHALL FURNISH AND INSTALL LAMPS IN ALL LUMINAIRES AS FOLLOWS.
   - TRAFFIC SIGNALS AND GATE ARM LIGHTS (EXCEPT GREEN) - 165 WATT TS LAMPS
   - GREEN TRAFFIC SIGNAL LAMPS - 69 WATT TS LAMPS
   - FLUORESCENT LAMPS - F40 COOL WHITE
   - FLOODLIGHTS - Q 1500T 3
   - NAVIGATION LIGHTS - AS STATED ON 300 SERIES EQUIPMENT LIST
   - ALL OTHERS - 75 TO 100 WATT EXTENDED SERVICE, I.F., 150 VOLT

R. Higginson

E20

STATE OF LOUISIANA
DEPARTMENT OF HIGHWAYS

ELECTRICAL SYSTEM
QUANTITIES - 1
BAYOU DULARGE BRIDGE

MODJESKI AND MASTERS
CONSULTING ENGINEERS

DATE	DESCRIPTION	BY
	REVISIONS	

DATE: 7-9-74 | SCALE: NONE | DWG.NO.: 190
DRAWN BY: JMS | CHKD.BY: HAF | IN CHARGE: TS | APPROVED:

AS-BUILT

363

ROUTE	STATE PROJECT	PARISH	SHEET NO.
LA.315	245-03-41	TERREBONNE	191

ITEM NO.	QUAN.	NAME	SERVICE	MANUFACTURER	TYPE, MODEL, CAT. NO.	RATING AND DESCRIPTION
200	2	CABINET SWITCHBOARDS	ENCLOSURE FOR CONTROL, INTERLOCKING		AS SPECIFIED	SEE DETAILS ON DWG. NOS. E17, E18 & E19.
201	1	LINE FUSE ASSEMBLY	PROTECT PHASE FAILURE AND VOLTMETER	GENERAL ELECTRIC	FUSE GF886 MOUNT CAT. NO. 108C9633 GROUP NO. 5	3-GANG FUSE ASSY CONSISTING OF 3-600V, 6-AMP NEMA CLASS J FUSES AND SPECIFIED CLASS J MOUNT
202	1	RELAY, PHASE REVERSAL/FAILURE-PF	PROTECT SPAN CONTROL SYSTEM	GENERAL ELECTRIC	CR150DA110/CR120E RE Y	INPUT 230V, 60HZ 3-PHASE OUTPUT DPST 2NO, 10 AMP, 600V CONTACTS
203	4	CIRCUIT BREAKER	TRACTION MOTOR FEEDER PROTECTION (M1, M2, M3 & M4)	GENERAL ELECTRIC	TFJ236100ML	3P, 600V, 225A FRAME 100 AMP. NON-INTERCHANGEABLE TRIP
204	4	CONTACTOR, MOTOR REVERSING	CONTROL TRACTION MOTORS (M1, M2, M3 & M4)	GENERAL ELECTRIC	CR209-E003ALA	3-PHASE, 3-POLE, 600V, 60HZ, SIZE 3, 30 HP AT 230V LESS OVERLOADS 2-NC INTERLOCKS, 230V COIL OPEN CONTROLLER-MECHANICALLY INTERLOCKED AND AUXILIARY CONTACTS AS SHOWN (SEE DWG. NO. E18)
205	4	OVERLOAD, MOTOR (OL-M1, OL-M2, OL-M3, OL-M4)	PROTECT TRACTION MOTORS	GENERAL ELECTRIC	CR224E620A OVERLOAD RELAY WITH SIZE 3 TYPE CR123 HEATERS	600V, 90 AMP AMBIENT COMPENSATED 3-LEG OPEN BLOCK TYPE SIZE 3 RELAY COMPLETE WITH 3 HEATERS TO BE SPECIFIED BY THE MOTOR MANUFACTURER.
206	4	TRANSFORMER, CURRENT (CT1 THRU CT4)	MEASURE TRACTION MOTOR CURRENT DRAWN	GENERAL ELECTRIC	TYPE JKM-0 750x4JG10	150 AMP PRIMARY, 5 AMP SECONDARY-INDOOR TYPE (SEE DWG. NO. E19) 600 VOLT
207	4 SETS	RESISTORS (TRACTION MOTOR ACCELERATION)	TRACTION MOTORS SPEED CONTROL	GENERAL ELECTRIC	1C9133 EDGEWISE WOUND TYPE	CONTINUOUS DUTY NEMA CLASS 91, 25% FULL LOAD CURRENT ON FIRST POWER POINT, PERMANENT SECTION FOR 4 POINTS OF ACCELERATION AND CONTROL OF 25HP, 3φ, 230V, 60HZ INTERMITTENT RATED WOUND ROTOR CRANE AND HOIST TYPE MOTOR. ROTOR SECONDARY OPEN CIRCUIT VOLTS AT STANDSTILL AND MAXIMUM AMPS PER TERMINAL AT FULL LOAD SHALL BE OBTAINED FROM THE MOTOR MANUFACTURER.
208	8	CONTACTOR, ACCELERATING (NMR1 THRU NMR4) (FMR1 THRU FMR4)	TRACTION MOTOR RESISTOR CONTROL	GENERAL ELECTRIC	CR205-U003	600V, 60HZ, 4-POLE SIZE 3, 100 AMP OPEN RATING, 230V, COIL AND ONE(1) NO ONE(1) NC AUXILIARY CONTACT.
209	18	CIRCUIT BREAKER	BRAKE AND GATE FEEDER PROTECTION (6-SPARE)	GENERAL ELECTRIC	TED134020ML	3P, 480V, 100A FRAME WITH 20 AMP FIXED TRIP
210	9	CONTACTOR	CONTROL BRAKES AND GATES	GENERAL ELECTRIC	CR205-R003AEB	3-PHASE, 3P, 600V, 60HZ, SIZE 0, 30 AMP OPEN RATING, 230V COIL AND ONE(1) NO ONE(1) NC AUXILIARY CONTACT
211	14	OVERLOAD, MOTOR	PROTECT BRAKES AND LOCK MOTORS	GENERAL ELECTRIC	CR224C620A OVERLOAD RELAY WITH SIZE 1 TYPE CR123 HEATERS	600V, 27 AMP AMBIENT COMPENSATED 3-LEG OPEN BLOCK TYPE SIZE 1 RELAY COMPLETE WITH 3 HEATERS TO BE SPECIFIED BY THE MOTOR MANUFACTURE
212	8	CIRCUIT BREAKER	LOCK FEEDER PROTECTION (2-SPARE)	GENERAL ELECTRIC	TED 134030ML	3P, 480V, 100A FRAME WITH 30 AMP FIXED TRIP
213	6	CONTACTOR, MOTOR REVERSING	CONTROL LOCKS	GENERAL ELECTRIC	CR209-B003BAA	3 PHASE, 3 POLE, 600V, 60HZ, SIZE 0, 3HP AT 230V LESS OVERLOADS 2NC INTERLOCKS, 230V COIL OPEN CONTROLLER WITH AUXILIARY CONTACTS AS REQUIRED
214	6	RELAY, CONTROL	UNDERVOLTAGE CONTROL, & SEATING	GENERAL ELECTRIC	CR2810-A14AB3	600V, 10 AMP, 3 POLES (3-NO-CONVERTIBLE) 230V COIL OPEN FORM.
215	1	RELAY, CONTROL (TR)	CONTROL TRAFFIC SIGNAL LIGHTS	GENERAL ELECTRIC	CR2820-B111AA2	600V, 15A PNEUMATIC TIME DELAY ADJUSTABLE 1/5 TO 180 SECONDS ON ENERGIZATION WITH 1NO-1NC DELAYED CONTACTS 1NO-1NC INSTANTANEOUS AUXILIARY CONTACTS 120V COIL OPEN

ITEM NO.	QUAN	NAME	SERVICE	MANUFACTURER	TYPE, MODEL, CAT. NO.	RATING AND DESCRIPTION
216	33	BLOCKS, TERMINAL	WIRING	SQUARE D	U-3	600V, 3-CIRCUITS, HIGH PRESSURE BOX CONNECTOR
217	38	BLOCKS, TERMINAL	WIRING INTERCONNECTIONS	BUCHANAN	NO. B112S	600V, 12-CIRCUITS, HIGH PRESSURE BOX CONNECTOR
218	2	LIGHT, FLUORESCENT SERVICE	ILLUMINATE EQUIPMENT AND WIRING COMPARTMENT	GENERAL ELECTRIC	STANDARD FLUORESCENT STRIP	NOMINAL 48" LENGTH 40 WATT T-12 LAMP 120V INSTANT START-WHITE (SEE DWG. NO. E19) TO INCLUDE ALL SWITCHES NECESSARY FOR OPERATION (SEE NOTE 8, DWG. NO. E8)
219	2	CIRCUIT BREAKER	CONTROL AND INDICATION FEEDER PROTECTION	GENERAL ELECTRIC	TED124015ML	2P, 480V 100 AMP FRAME WITH 15 AMP FIXED TRIP
220	2	HEATER, SWITCHBOARD	SWITCHBOARD TEMPERATURE CONTROL	CHROMALOX	TYPE SCB CODE NO. 253850	EDISON SCREW BASE TYPE 120 V, 150 WATT WITH EDISON SCREW TYPE MTG BASE AND ALL MTG HARDWARE

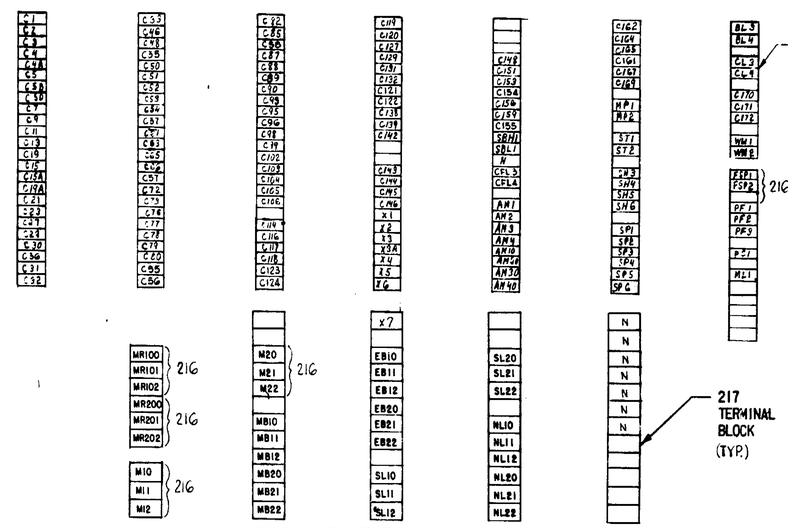

NOTES:

1. ITEMS LISTED ON THIS SHEET ARE FOR SWITCHBOARD CABINETS ONLY SEE DWG. E17, E18 & E19.
2. ALL TERMINAL BLOCKS SHOWN AND NOT DESIGNATED SHALL BE INSTALLED AS SPARE UNTIL USED (ITEM 217).
3. SEE SHEET E20 FOR LAMPING NOTES.
4. ALL TERMINAL BLOCKS ARE ITEM 217 EXCEPT WHERE NOTED 216.

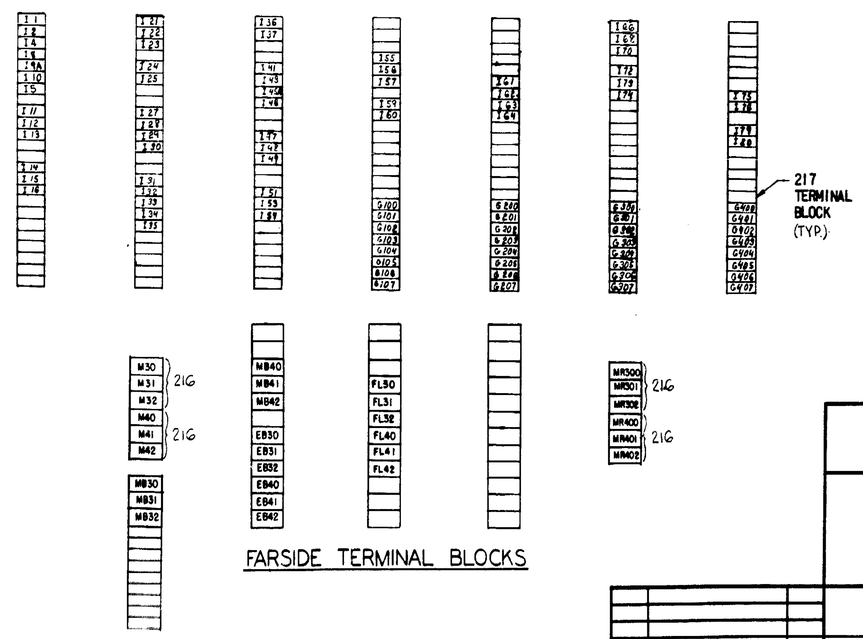

E21

STATE OF LOUISIANA
DEPARTMENT OF HIGHWAYS

ELECTRICAL SYSTEM
QUANTITIES - 2
BAYOU DULARGE BRIDGE

MODJESKI AND MASTERS
CONSULTING ENGINEERS

DATE	DESCRIPTION	BY
	REVISIONS	

DATE: 7-9-74 | SCALE: NONE | DWG. NO.: 191
DRAWN BY: JMS | CHKD. BY: HAE | IN CHARGE: TS | APPROVED:

AS BUILT

364

ROUTE	STATE PROJECT	PARISH	SHEET NO.
LA.315	245-03-41	TERREBONNE	192

ITEM NO.	QUAN.	NAME	SERVICE	MANUFACTURER	TYPE, MODEL, CAT. NO.	RATING AND DESCRIPTION
300						
301	1	POLE, SERVICE (SE-SP)	MOUNT SERVICE ENTRANCE EQUIPMENT (ITEM 302 & 303)	AMERICAN CREOSOTE WORKS INC.	CLASS 5, 35 FT. MAX.	SOUTHERN PINE POLE CREOSOTED OR PENTA-TREATED TO 12# CU.FT. RETENTION IN ACCORDANCE WITH APPLICABLE PROVISIONS OF AWPA STANDARD C1. (SEE DWG. NO. E2 NOTE 1)
302	1	METER, WATTHOUR SE-WM	RECORD UTILITY ENERGY USAGE	METER FURNISHED BY SOUTHERN LA.ELECT COOP.BASE BY CONTRACTOR	AS SPECIFIED BY SOUTHERN LA.ELECT. COOP.	CONTRACTOR SHALL FURNISH AND INSTALL METER BASE OR METERING CABINET AS SPECIFIED BY THE SOUTHERN LOUISIANA ELECTRIC CO-OP, HOUMA LA.
303	1	SWITCH-FUSED SAFETY SE-DS, SE-FU	SERVICE ENTRANCE DISCONNECT	SQUARE D	H325NDS	240V, 4W-SN, 400 AMP WATERTIGHT NEMA TYPE 4 STAINLESS STEEL COMPLETE WITH LINE FUSES AS SPECIFIED BY THE.UTILITY CO.
304	1 SET	ROD, GROUND (SE-NG)	GROUNDED NEUTRAL AND EQUIPMENT GROUNDING	COPPER WELD	DRIVE ROD.TYPE	3/4"φ x10 FT. COPPERCLAD STEEL ROD DRIVEN 1 FT. BELOW FINISHED GROUND LEVEL AND CONNECTED THROUGH A AWG #6 BARE GROUNDING CONDUCTOR BY MEANS OF A BRONZE CLAMP WITH ALLEN HEAD SCREW.
305	1	CIRCUIT BREAKER, MAIN (CB-M)	NORMAL SUPPLY PROTECTION	SQUARE D	LAE36400S 400S/N	3P, 600V, 400A FRAME NON-INTERCHANGABLE TRIP/INSULATED GROUND NEUTRAL MOUNTED IN NEMA 1 ENCLOSURE (SURFACE MOUNT)
306	4	SWITCH, INSIGHT SAFETY DISCONNECT (M1,M2,M3,& M4)	SAFETY & MAINTENANCE DISCONNECT MAIN MOTORS	SQUARE D	HU 363 D	3P, 480V, 100 AMP NO FUSE NEMA 4 ENCLOSURE, CAST ALUM
307	4	MOTOR, TRACTION (M1, M2, M3, M4)	DRIVE OPERATING MACHINERY	GENERAL ELECTRIC	MR TRI-CLAD WOUND ROTOR MOTOR FRAME 326TX	25HP, 230V, 3φ, 60HZ, 900 RPM SYNCHRONOUS 870RPM DESIGN FL MEETING NEMA DESIGN STANDARDS FOR SECONDARY VOLTAGE AND FL AMPS-TENV 30 MIN. RATED CLASS B INSULATION 1.0 SERVICE FACTOR, BALL BEARINGS WITH DRIVE AND FRONT END SHAFTS EXTENDED FOR THRUSTOR BRAKE COUPLINGS. MOTOR-HALF OF BRAKE COUPLINGS SHALL BE PRESSED ON THE MOTOR SHAFTS BY THE MOTOR MFGR. FL = FULL LOAD
308	14	SWITCH, INSIGHT SAFETY DISCONNECT	SAFETY & MAINTENANCE DISCONNECT (ALL BRAKES AND LOCKS)	SQUARE D	HU 361 D	3P, 480V, 30 AMP, NO FUSE, NEMA TYPE 4 CAST ALUMINUM
309	4	BRAKE, THRUSTOR DRIVE MOTOR (MB1, MB2, MB3, AND MB4)	RETARD, STOP AND HOLD DRIVE MOTOR AT REST	GENERAL ELECTRIC	IC9516 FORM 463S (2-RIGHT AND 2-LEFT)	160 LB.-FT. SPRING SET HYDRAULIC THRUSTOR WITH TIME DELAY AND TORQUE ADJUSTMENTS FOR 230V, 3φ, 60HZ PUMP DRIVE MOTOR. A 3-CONTACT L.S.(2NO-1NC) FOR CONTROL INTERLOCKING AND INDICATION. A LATCHED HAND RELEASE SHALL BE EQUIPPED WITH A 2-CONTACT L.S.(1NO-1NC) FOR INTERLOCKING AND INDICATION AND BE EXTENDED FOR OPERATION OUTSIDE OF AN OVERALL WEATHERPROOF COVER.
310	4	BRAKE, THRUSTOR EMERGENCY (EB1 THRU EB4)	EMERGENCY STOP AND HOLD LEAF AT REST	GENERAL ELECTRIC	IC9516 FORM 464S (2-RIGHT AND 2- LEFT)	400 LB-FT. THRUSTOR WITH 230V, 3φ, 60 HZ PUMP DRIVE MOTOR SIMILAR TO ITEM 309
311	2	LOCK, SHEAR	LOCK LEAF GIRDERS AT CENTER OF SPAN	EARL GEAR	EARL NO.2 LOCK BAR OPERATOR	UNIT ASSEMBLY FOR OPERATION OF A 10" LOCK BAR WITH A THRUST OF 8800 POUNDS AT 50% STALLED MOTOR TORQUE THROUGH 6 SECONDS TIME. MOTOR SHALL BE 230V, 3φ, 60HZ, 25 FT.LBS. STALLED TORQUE, 20% RUNNING TORQUE, 1800RPM TENV BALL BEARING FRAME 184 ALUMINUM. MAGNETIC BRAKE SHALL BE RATED 10 FT.LBS. TORQUE INTERMITTENT WITH HAND RELEASE. LIMIT SWITCH SHALL BE END TRAVEL TYPE, 2-POLE 8-CONTACT SNAP ACTION PROVIDING 2-NO AND 2-NC CONTACTS AT EXTREME ENDS OF TRAVEL.
312	4	LOCK, BEARING (NL1, NL2, FL3 &FL4)	LOCK LEAF GIRDER AT BEARING SEAT	EARL GEAR	EARL NO.2 LOCK BAR OPERATOR	UNIT ASSEMBLY FOR OPERATION OF A 19" LOCK BAR SIMILAR TO ITEM-311
313	4	GATE, TRAFFIC	TRAFFIC CONTROL DURING SPAN OPERATIONS	B & B ELECTROMATIC CORP.	ABC-26 (SEE DWG. NO. E30)	COMPLETE ASSEMBLY CONSISTING OF ALUMINUM TRANSMISSION HOUSING AND ARM CHANNELS FOR 21'-9" OFF-SET COUNTERWEIGHTED ARM AS SHOWN ON DETAILS COMPLETE WITH 12"φ GATE ARM LIGHT TYPE 1201-700A. HEAVY DUTY OPERATING MECHANISM, MOTOR DRIVEN BY 230V, 3φ, 60HZ, 1/2 HP MOTOR WITH BUILT IN OVERLOADS CONTINUOUS DUTY RATED, AUTOMATIC ARM LOCK AND HANDCRANK WITH AUTOMATIC DISCONNECT AND 8-CIRCUIT LIMIT SWITCH. GEAR DRIVEN FROM TRANSMISSION TO PROVIDE INTERLOCKING INDICATION AND MOTOR REVERSAL, A NONFUSED IN-SIGHT DISCONNECT SWITCH SHALL BE PROVIDED AND MOUNTED IN HOUSING OF TRANSMISSION FRAME.
314	8	SWITCH, PLUNGER LIMIT	SEATING AND EXTREME LIFT STOP	B & B ELECTROMATIC CORP.	PLS400 (SEE DWG. NO. E28 & E29)	4-CIRCUIT(2-NO,2-NC) HEAVY DUTY CAST IRON HOUSING CORRISION RESISTANT FINISH. 20 AMP CONTACTS POSITIVE LATCHING WITH BALL BEARING OPERATING MECHANISM JOURNALED BRONZE BEARINGS OIL IMPREGNATED, STAINLESS STEEL PLUNGER SHALL BE TERMINATED BY A CAPTIVE BALL AND RETAINING CAP.
315	2	SWITCH, LEAF LIMIT	SUPERVISE LEAF CONTROL	B&B ELECTROMATIC CORP.		REVERSING 12 CIRCUIT, 15 AMP CARRY 50 AMP BREAK AT 230V SNAPACTION CONTACTS. 60 RPM MAX. CAM SHAFT SPEED ADJUSTABLE CAM SETTINGS AND VERNIER CAM SHAFT ROTATION OR 0.945 OF USABLE GEAR SHAFT TURNS SEE ITEM 315A.
315A	2	GEAR REDUCER AND FLEXIBLE COUPLING	DRIVE LEAF LIMIT SWITCH AND LEAF POSITION TRANSMITTER	BOSTON GEAR	WORM GEAR (SEE DWG. NO.E29)	GEAR RATIO TO LIE BETWEEN 2.3 :1 AND 2.5:1 TO PROVIDE APPROX. 344° NOMINAL ROTATION OF LIMIT SWITCH FOR 76.5° MAX. LEAF ROTATION. REDUCER INPUT 11.83 REV. FOR 76.5° LEAF ROTATION OUTPUT TO PROVIDE FOR DIRECT COUPLING TO LIMIT SWITCH AND SELSYN INPUTS WITH 3/8"φ SHAFTS. FLEXIBLE COUPLING SHALL ACCEPT A 3/8"φ AND 3/4"φ SHAFT.
316	2	WARNING SIGN, WARNING FLASHER LIGHTS AND POLE	TRAFFIC CONTROL	B & B ELECTROMATIC CORP.	MODEL 803-6074 FLASHER 648155-A10 POLE WITH SIGN (SEE DWG.NO. E30)	2-HIGH INTENSITY 12" TRAFFIC SIGNALS WITH 24" SUNSHADES, 2-CIRCUIT SOLID STATE. FLASHER MOUNTED ON 10'FT. STANDARD 4"φ STEEL PIPE SHAFT, CAST STEEL BASE ASTM A27-58 GRADE 65-35 AND 4 HS STEEL ANCHOR RODS; FINISH ONE (1) SHOP COAT OF RUST RESISTANT PAINT. TO INCLUDE TRAFFIC WARNING SIGN.
317	4	SIGNALS, TRAFFIC	TRAFFIC CONTROL	B & B ELECTROMATIC CORP.	TYPE 1204-8690 (SEE DWG. NO. E30)	HEAVY DUTY ALUMINUM 12" ADJUSTABLE TRAFFIC SIGNALS "R-R-A-G" WITH BAYONET TYPE SUNVISORS AND MOUNTING HARDWARE FINISHED TRAFFIC SIGNAL GREEN. 4"φ STEEL PIPE SHAFT, CAST STEEL BASE AND ANCHOR BOLTS SIMILAR ITEM 316
318	2	TRANSMITTER, LEAF POSITION (NLPX & FLPX)	DRIVE SPAN POSITION INDICATOR (ITEM 114)	HENSCHEL CORP. AMESBURY, MASS.	CAT.NO. 10-1051-2 TO BE WORKED WITH ITEM 114 SELSYN POSITION INDICATOR (SEE DWG. NO. E28)	WATERTIGHT CAST BRASS ENCLOSURE WITH INPUT SHAFT COUPLED TO REDUCER ITEM 315A AND INTERNALLY GEARED TO SYNCHRO-TRANSMITTER BY THE SELSYN SYSTEM MANUFACTURER TO PROVIDE FOR SELSYN SPEED DESIGN REQUIREMENTS.
319						
320	4	LIGHT, MARINE BASCULE	LEAF POSITION MARKER	B & B ELECTROMATIC CORP.	MS-66-B3-BK S1-JB-A-G180-R180-RT AND 2-100W, 32000 HR CLEAR LAMP DESIGNATION C-574-XL-100-CL 32 M	180° GREEN OVER 180° RED, PIVOT & ~~ANTI-SWING~~ LOCK SUSPENDED BY A CAST BRONZE HOUSING WITH STAINLESS STEEL PIVOT ON 1 1/2" STAINLESS STEEL HANGER SHAFT, LENS HOUSING OF HEAVY CAST ALUMINUM FOR PERMANENT RIGID HEAT RESISTANT 200 MM MARINE FRESNEL LENS, ANTI-LAMP FREEZING 250V, 600 WATT SOCKET FOR 100 WATT, 32000 HR. CLEAR LAMPS AND AUTOMATIC TRANSFER SWITCH MOUNTED ON LIGHT UNIT - BRONZE SERVICE CHAIN SHALL BE PROVIDED FOR MAINTENANCE USE.
321	8	LIGHT, MARINE FENDER	FENDER CLEARANCE MARKER	B & B ELECTROMATIC CORP.	MS-531-PM-200 MM-JB-A-RT R180 AND -100W, 32000 HR LAMP C-574-XL-100 CL 32 M	180° RED PEDESTAL MOUNTED HOUSING SIMILAR ITEM 320 WITH JUNCTION BOX MOUNTING (SEE DWG. NO. E29)

NOTES:
1. SEE SHEET E20 FOR LAMPING NOTES.

See Revised sheet attached to P.C.1

E22

STATE OF LOUISIANA
DEPARTMENT OF HIGHWAYS

ELECTRICAL SYSTEM
QUANTITIES-3
BAYOU DULARGE BRIDGE

MODJESKI AND MASTERS
CONSULTING ENGINEERS

DATE	DESCRIPTION	BY
	REVISIONS	

DATE: 7-9-74 | SCALE: NONE | DWG.NO: 192
DRAWN BY: JMS | CHKD.BY: HAE | IN CHARGE: TS | APPROVED:

AS-BUILT

365

ROUTE	STATE PROJECT	PARISH	SHEET NO.
LA.315	245-03-41	TERREBONNE	193

ITEM NO.	QUAN.	NAME	SERVICE	MANUFACTURER	TYPE, MODEL, CAT. NO.	RATING AND DESCRIPTION
322	AS REQ'D.	BOX, JUNCTION	DISTRIBUTION OF POWER AND CONTROL WIRING		AS SPECIFIED	SEE DETAILS DWG.NO. E25 & E26.
323						
324	AS REQ'D.	CONDUIT	DISTRIBUTION OF POWER AND CONTROL WIRING		AS SPECIFIED	SEE DWG. NO. E9, E10, E11, E12 & E13.
325	AS REQ'D.	WIRING GENERAL	POWER AND CONTROL SYSTEM		AS SPECIFIED	SEE DWG. NO. E9, E10, E11, E12 & E13.
326	AS REQ'D.	CABLE SUBMARINE	POWER AND CONTROL SYSTEM		SUPPLIED BY LOUISIANA DEPT. OF HIGHWAYS	SUBMARINE CABLE MAKEUP SHALL CONSIST OF 6/C#1 AND 30/C#12 AS SUPPLIED BY LOUISIANA DEPT. OF HIGHWAYS
327						
328	2	LIGHT, QUARTZ FLOOD	AUXILIARY CHANNEL LIGHTS	APPLETON	G-5TN-1.	SWIVEL JUNCTION MOUNTING, WIDE BEAM 1500 WATT, WITH JUNCTION BOX, 240 VOLT
329	1	HORN UNIT	NAVIGATION HORN	LESLIE	SM-25-2R	MARINE CONSTRUCTION, 1/2" PIPE TAP 2-HORNS MOUNTED BACK TO BACK
330	1	MANUAL-SOLENOID VALVE	NAVIGATION HORN	B & B ENGINEERING	TYPE FLV-18A32A	240 V AC, 60 HERTZ SOLENOID, CAST ENCLOSURE, BRONZE VALVE 1/2" SIZE, 3/4" CONDUIT HUB
331	1	AIR COMPRESSOR	NAVIGATION HORN	QUINCY COMPRESSOR CO.	MODEL V106	3/4 HP, 240 V AC, 1Φ, 60 HERTZ 4.4 CUBIC FEET DISPLACEMENT PRESSURE "CUT-IN" AT 120 PSI "CUT-OUT" AT 150 PSI. 30 GALLON TANK WITH 1" VALVE STRAINER, DRAIN COCK, GAUGE AND VERTICAL BELT GUARD. MOTOR TO BE WEATHERPROOF.

ITEM NO.	QUAN.	NAME	SERVICE	MANUFACTURER	TYPE, MODEL, CAT. NO.	RATING AND DESCRIPTION
400	1	GENERATOR, DIESEL ENGINE (EG)	STANDBY AND EMERGENCY POWER	ONAN	150-ODYG-15R	120/240V, 60HZ, 3Φ, 4 WIRE DELTA, CONTINUOUS STANDBY SERVICE RATED 150KW/187.5 KVA 0.8 PF GENERATOR, DIESEL ENGINE DRIVEN AT 1800 RPM BY 6 CYLINDER 4 CYCLE 1844 CU. IN. ALLIS CHALMERS MODEL 1700 MK II TURBO CHARGED ENGINE, LIQUID COOLED WITH 18400 CFM COOLING AIR, FUEL INJECTION FOR USE OF #2 DIESEL OIL AT 11.5 GPH. GEAR DRIVEN GOVERNOR, LUBRICATION SYSTEM AND REMOTE 24V STARTING SYSTEM AND COMPLETE UNIT MOUNTED CONTROL PANEL. THE COMPLETE ASSEMBLY SHALL BE WARRANTED FOR A PERIOD OF 5 YEARS FROM DATE OF BENEFICIAL USE. ENGINE-GENERATOR SKID MOUNT TO BE EQUIPPED WITH-SPRING TYPE VIBRATION ISOLATORS. GENERATOR TO BE EQUIPPED WITH MAIN CIRCUIT BREAKER RATED 3P, 600V, 400A WITH INTERCHANGEABLE TRIP AND INSULATED GROUND NEUTRAL.
401	1	TANK, OIL (FST)	MAIN FUEL STORAGE	ONAN	FUEL SUPPLY ACCESSORY	UNDERGROUND TYPE UNDERWRITERS LABEL 560 GAL. CAPACITY WITH PROTECTO SEAL FILL AND VENT FITTINGS RATED EXPLOSION PROOF
402	1	TANK, OIL (FDT)	DAY SERVICE TANK	ONAN	FUEL SUPPLY ACCESSORY	60 GAL. DAY TANK EQUIPPED WITH FUEL PUMP AND DOUBLE POLE FLOAT SWITCH WITH BRACKETS FOR OVERHEAD MOUNTING AND ALL NECESSARY MOUNTING HARDWARE AND HEAT INSULATED COVER.
403	1	MUFFLER (EXM)	DIESEL ENGINE EXHAUST SYSTEM	MAXIM	DIESEL ENGINE EXHAUST	6" CRITICAL TYPE MUFFLER AS MANUFACTURED BY MAXIM SEE NOTE 2
404	1	BATTERY (BAT)	ENGINE STARTING	ONAN	LEAD-ACID STORAGE	24V SYSTEM-COMPRISED OF 2-12V, 225 AMP-HR. UNITS COMPLETE WITH BATTERY RACK AND ALL NECESSARY MOUNTING HARDWARE.
405	1	BATTERY CHARGER				PART OF AUTOMATIC TRANSFER SWITCH. SEE ITEM 407.
406	1	CIRCUIT BREAKER CB-G				PART OF GENERATOR SET SEE ITEM 400
407	1	SWITCH, TRANSFER (SW-XFR)	START GENERATOR & TRANSFER LOAD	ONAN	MODEL LTDU400-5D	120/240V, 3Φ, 4W DELTA 400 AMPERE AUTOMATIC START AND TRANSFER ON UTILITY POWER FAILURE WITH ADJUSTABLE DELAYED RE-TRANSFER AND UNLOADED COOL DOWN RUN PROVISION, ADJUSTABLE AUTOMATIC STANDBY EXERCISER TEST SWITCH, AND AUXILIARY CONTACTS FOR CONTROL DESK INDICATIONS AND BATTERY CHARGER. (SEE DWG. NO. E2)
408	1	LOUVER, INTAKE (INL)	AIR SUPPLY FOR DIESEL ENGINE	CONSTRUCTION SPECIALTIES INC.	MODEL 4910 E	56x72 ELECTRICALLY OPERATED DUAL COMBINATION AIR INTAKE DAMPER FRAMES AND BLADES 6063-T52 ALLOY WITH REINFORCING BOSSES, BLADES FULLY CUSHIONED BY FULL LENGTH VINYL GASKETS WITH 46% FREE AREA AND NYLON BEARING PIVOTS. LOUVER SHALL BE ELECTRICALLY OPERATED FROM STANDBY GENERATOR POWER SUPPLY AND BE EQUIPPED FOR MANUAL OPERATION COMPLETE WITH ALL NECESSARY MOUNTING HARDWARE. SEE NOTE 3
409	1	LOUVER, EXHAUST (EXL)	AIR EXHAUST FOR DIESEL ENGINE	CONSTRUCTION SPECIALTIES INC.	MODEL 4910	48x54 DUAL COMBINATION AIR EXHAUST DAMPER SIMILAR AS SPECIFIED FOR ITEM 408, EXCEPT GRAVITY OPERATED. SEE NOTE 3

NOTE:

1. ENGINE GENERATOR SET TO BE TESTED BY LOUISIANA DEPT. OF HIGHWAYS AT FULL RATED LOAD.
2. MUFFLER AND ALL RIGID EXHAUST PIPING SHALL BE HEAT INSULATED FOR 1200°F.- OWENS CORNING "KAYLO" OR APPROVED EQUAL.
3. AIR INTAKE & EXHAUST LOUVERS AND LOUVER OPENINGS SHALL BE SIZED ACCORDING TO RECOMMENDATION OF ENG.-GENERATOR MANUFACTURER.
4. SEE SHEET E20 FOR LAMPING NOTES.

E23

STATE OF LOUISIANA
DEPARTMENT OF HIGHWAYS

ELECTRICAL SYSTEM
QUANTITIES - 3A & 4
BAYOU DULARGE BRIDGE

MODJESKI AND MASTERS
CONSULTING ENGINEERS

DATE	DESCRIPTION	BY
	REVISIONS	

DATE: 7-9-74 | SCALE: NONE | DWG.NO.:
DRAWN BY: JMS | CHKD.BY: HAE | IN CHARGE: TS | APPROVED:

AS BUILT

ROUTE	STATE PROJECT	PARISH	SHEET NO.
LA. 315	245-03-41	TERREBONNE	194

ITEM NO.	QUAN.	NAME	SERVICE	MANUFACTURER	TYPE, MODEL, CAT. NO.	RATING AND DESCRIPTION
500	1	PANELBOARD, (NSP) NEARSIDE	NEARSIDE POWER DISTRIBUTION	GENERAL ELECTRIC	TYPE NLAB	1Φ,3W,PANELBOARD 225 AMP, WITH A TYPE TFK MAINBREAKER. PANELBOARD SHALL INCLUDE 38 BRANCH CIRCUIT BREAKERS EITHER SINGLE POLE OR DOUBLE POLE BOLT ON GROUND FAULT INTERRUPTING TYPE CIRCUIT BREAKERS (SEE DWG. NO. E8)
501	1	PANELBOARD, (FSP) FARSIDE	FARSIDE POWER DISTRIBUTION	GENERAL ELECTRIC	TYPE NLAB	1Φ,3W,PANELBOARD 70 AMP, WITH A TYPE TFK MAIN BREAKER. PANELBOARD SHALL INCLUDE 12 BRANCH CIRCUIT BREAKERS EITHER SINGLE POLE OR DOUBLE POLE BOLT ON,GROUND FAULT INTERRUPTING TYPE CIRCUIT BREAKERS AS REQUIRED (SEE DWG. NO. E8)
502						
503	6	LIGHTING FIXTURE	LAVATORY, GENERATOR ROOM	DAY BRITE	TIX42-VT707	1'x4' WITH 2-40 WATT RAPID START COOL WHITE LAMPS, SURFACE MOUNTED WITH BALLAST AND GASKET. REFRACTOR SHALL BE MADE OF HIGH IMPACT ACRYLIC.
504	5	LIGHT, INTERIOR FLUORESCENT	OPERATORS HOUSE INTERIOR LIGHTING	DAY BRITE	4G42H-H6C3-4	2'x4'DIE-FORMED FLUORESCENT FIXTURE COMPLETE WITH FOUR (4) F40/RS LAMPS,DIMMING BALLASTS AND ACRYLIC REFRACTOR (IT SHALL BE THE RESPONSIBILITY OF THE CONTRACTOR TO PROVIDE A FIXTURE WHICH IS COMPATIBLE WITH THE SUSPENDED CEILING SYSTEM APPROVED FOR INSTALLATION)
505						
506	4	LIGHT, CANOPY	OPERATOR HOUSE EXTERIOR LIGHTING		COMMERCIAL	30° CONE ADJUSTABLE SPOT LIGHT IN DIE-FORMED ALUMINUM WEATHERTIGHT ENCLOSURE COMPLETE WITH JUNCTION BOX.FIXTURE SHALL BE COMPLETE WITH 75-WATT INCANDESCENT LAMP.
507	8	RECEPTACLE, (INDOOR) DUPLEX	CONVENIENCE OUTLETS AND MAINTENANCE POWER	GENERAL ELECTRIC	COMMERCIAL	20-AMP,120-VOLT,GROUNDED TYPE DUPLEX RECEPTACLE WITH KNOCK-OUTS FOR 1" CONDUIT EXPOSED ENCLOSURES SHALL BE ALUMINUM. CONCRETE ENCASED RECESSED ENCLOSURES SHALL BE TYPE FD, SIERRA P-LINE PLASTIC COVERS.
508	4	RECEPTACLE (OUTDOOR TYPE) (ML1 THRU ML4)	MAINTENANCE POWER	GENERAL ELECTRIC	INDUSTRIAL	20-AMP,SINGLE 120V,OUTDOOR GROUNDING RECEPTACLE IN A WATER-TIGHT ALUMINUM ENCLOSURE.
509	4	RECEPTACLE (OUTDOOR TYPE)	MAINTENANCE POWER	GENERAL ELECTRIC	INDUSTRIAL	20-AMP,SINGLE 240V,OUTDOOR GROUNDING RECEPTACLE IN A WATER-TIGHT ALUMINUM ENCLOSURE.
510	6	SWITCH, TOGGLE	INTERIOR LIGHTING CONTROL	GENERAL ELECTRIC	INDUSTRIAL	20-AMP,120V TOGGLE SWITCH WITH KNOCK-OUTS FOR 1" CONDUIT EXPOSED SWITCH ENCLOSURES SHALL BE ALUMINUM.CONCRETE ENCASED RECESSED SWITCH ENCLOSURES SHALL BE TYPE FD SIERRA P-LINE PLASTIC COVERS.
511	2	SWITCH, TOGGLE	OUTDOOR LIGHTING CONTROL	GENERAL ELECTRIC	INDUSTRIAL	30-AMP,120V,3-WAY SWITCH IN WATERTIGHT ALUMINUM ENCLOSURE AND COVER.ACCESS PROVISIONS FOR 1" ALUMINUM CONDUIT.
512	1	SWITCH, FLUORESCENT DIMMER	OPERATORS HOUSE INTERIOR LIGHTING	GENERAL ELECTRIC	DIMMER SWITCH CAT.NO. DF10155	1000 WATT, 120V DIMMER SWITCH COMPLETE GALV.STL.WALL BOX
513	1	AIR CONDITIONER & HEATER	CONTROL TEMPERATURE AND MOISTURE	SINGER	TYPE EK	230V UNIT WITH A COOLING CAPACITY OF 14,100 BTUH AND HEATER RATED AT 15,370 BTUH. IT SHALL BE A COMPLETE UNIT WITH ALL INCREMENTAL CONTROLS AND OUTSIDE LOUVERS NECESSARY FOR A COMPLETE OPERATING UNIT.

ITEM NO.	QUAN.	NAME	SERVICE	MANUFACTURER	TYPE, MODEL, CAT. NO.	RATING AND DESCRIPTION
514						366
515						
516	1	FAN, EXHAUST	LAVATORY VENTILATION	CHELSEA	RCK122CA	SEMI ENCLOSED 115V. 1Φ SUITABLE FOR ROOF MOUNTING WITH A LINED SOUND CURB TYPE PACC AND LOUVERS. UNIT SHALL BE COMPLETE WITH DAMPER AND ALL NECCESSARY MOUNTING HARDWARE.
517	30	LIGHT EXTERIOR FIXTURE	PIER LIGHTING	HOLOPHANE	SERIES 400	CAST ALUMINUM EXTERIOR LIGHTING FIXTURE COMPLETE WITH HEAT RESISTANT REFRACTOR AND 100W INCANDESCENT LAMP. FIXTURE SHALL BE WEATHERPROOF CONSTRUCTION SUITABLE FOR MOUNTING TO CONCRETE WALL. A GASKET SHALL BE PROVIDED AT THE ALUMINUM TO CONCRETE INTERFACE.

E24

STATE OF LOUISIANA
DEPARTMENT OF HIGHWAYS

ELECTRICAL SYSTEM
QUANTITIES-5
BAYOU DULARGE BRIDGE

MODJESKI AND MASTERS
CONSULTING ENGINEERS

DATE	DESCRIPTION	BY
	REVISIONS	

DATE: 7-9-74 | SCALE: NONE | DWG.NO.: 194
DRAWN BY: JNS | CHKD.BY: HAE | IN CHARGE: TS | APPROVED:

ROUTE	STATE PROJECT	PARISH	SHEET NO.
LA. 315	245-03-41	TERREBONNE	195

367

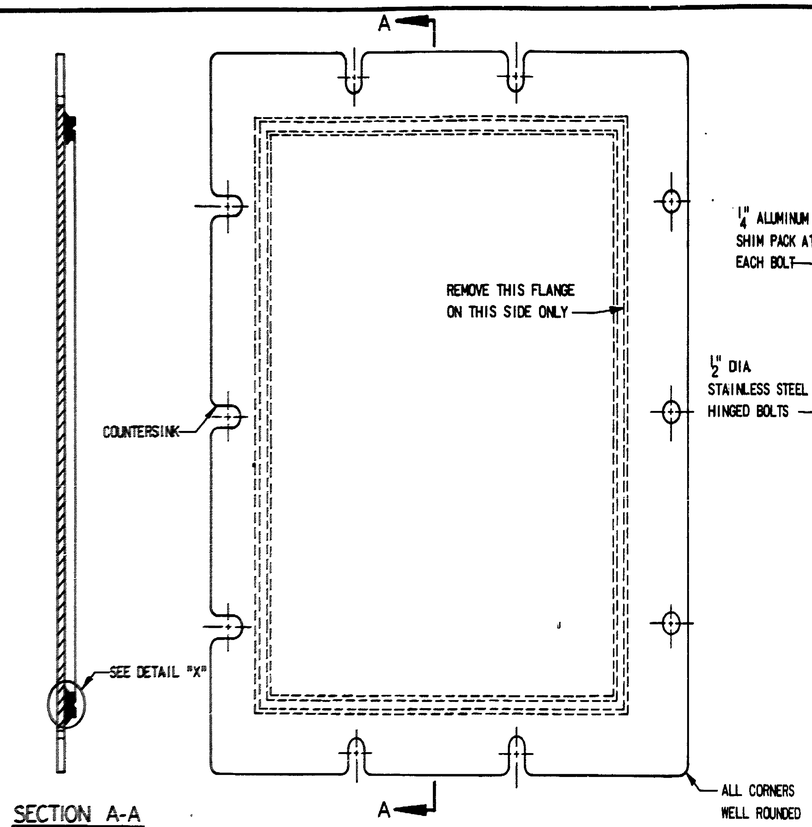

SECTION A-A

COVER

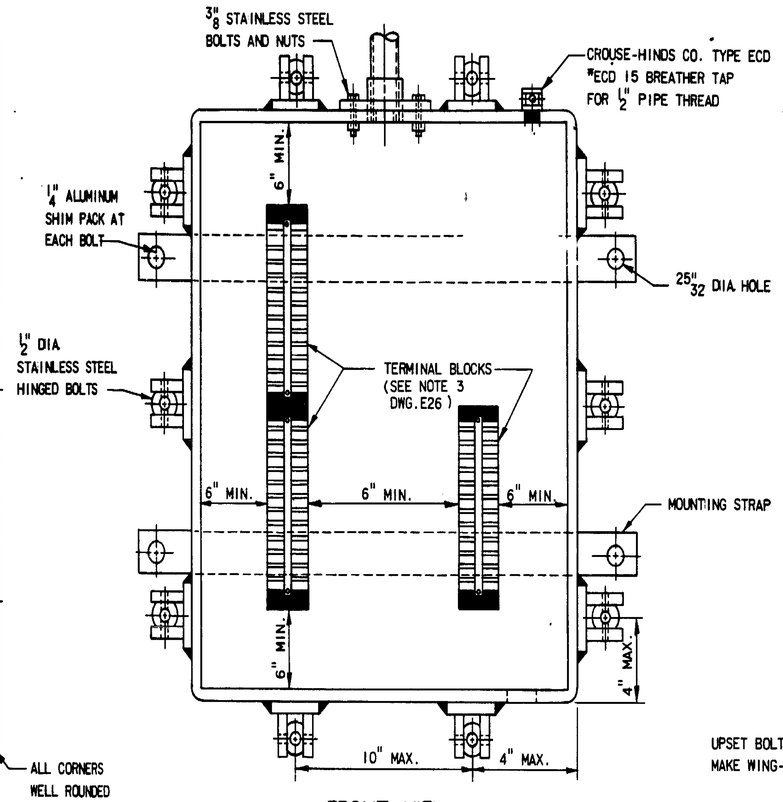

FRONT VIEW

(VIEW IS SHOWN WITH COVER REMOVED)

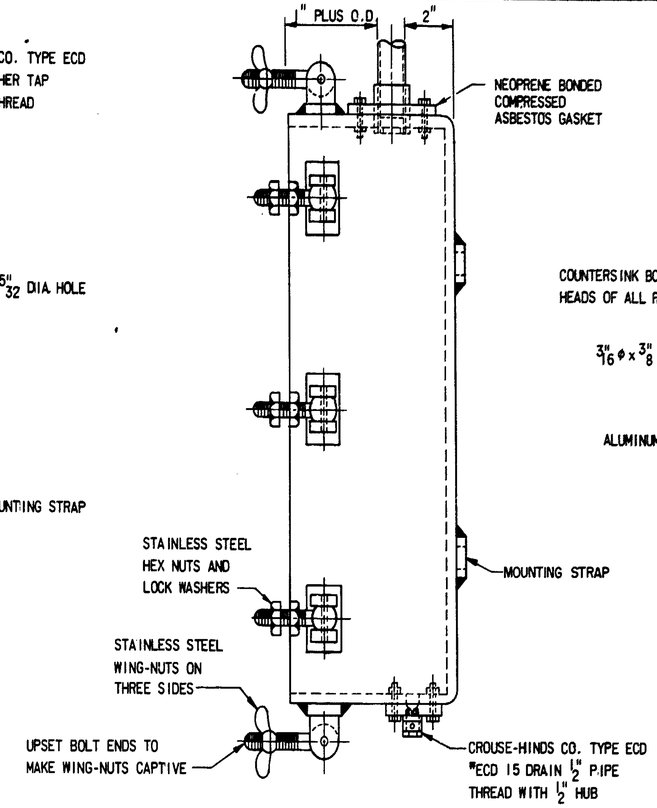

SIDE VIEW

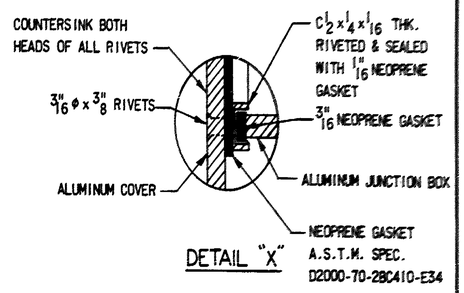

DETAIL "X"

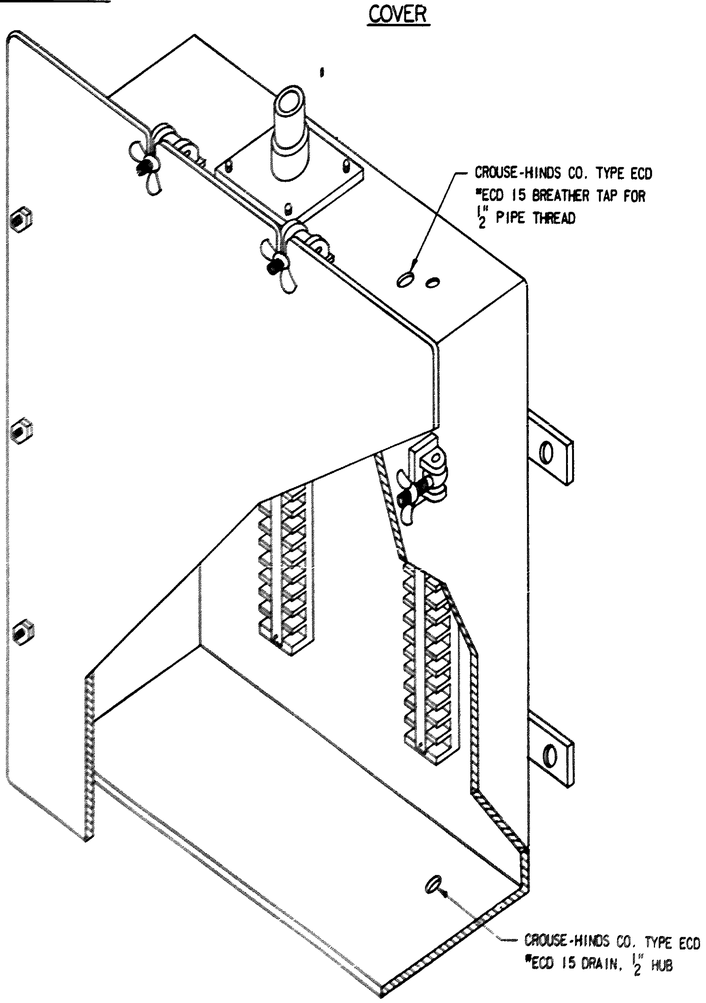

ISOMETRIC CUT AWAY

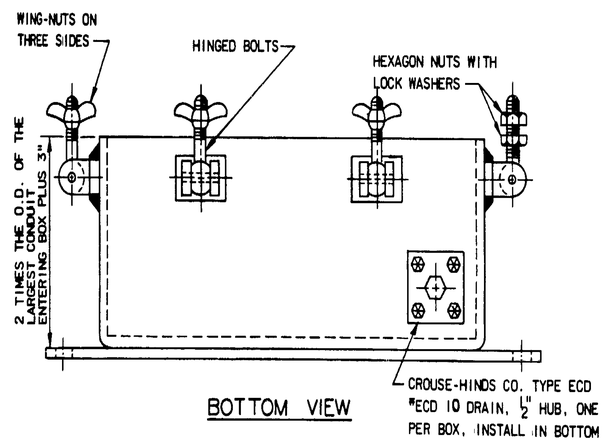

BOTTOM VIEW

SPECIFICATIONS: (SEE NOTE 2)

THE BOX SHALL BE MADE OF WELDED ALUMINUM PLATE 1/4" MINIMUM THICKNESS. ALL ALUMINUM USED IN THE MANUFACTURE OF THE BOX SHALL BE COPPER-FREE ALUMINUM ALLOY 6061-T6. ALL CORNERS, EDGES AND WELDED PARTS SHALL BE WELL-ROUNDED & GROUND SMOOTH. ALL OPENINGS IN THE BOX SHALL BE REAMED SMOOTH. ALL HUBS SHALL BE CAST ALUMINUM, AND ALL BOLTS, NUTS, AND OTHER HARDWARE SHALL BE STAINLESS STEEL. NEOPRENE GASKETS SHALL BE USED BETWEEN THE HUB AND THE BOX. THE BOX COVER SHALL BE FITTED WITH A NEOPRENE GASKET TO FORM A WATERPROOF SEAL. THE COVER SHALL BE HELD CLOSED WITH 1/2" STAINLESS STEEL HINGED BOLTS, HAVING STAINLESS STEEL WING NUTS ON THREE SIDES. THE HINGED BOLTS ON THE REMAINING SIDE SHALL ACT AS HINGES FOR THE COVER BY USING HEXAGON NUTS AND LOCK WASHERS TO HOLD THE COVER IN PLACE. HINGED BOLTS SHALL BE SET ON A MAXIMUM OF 10" CENTERS, EQUALLY SPACED ON OPPOSITE SIDES, NOT MORE THAN 4" FROM THE CORNERS ON ALL SIDES. TERMINAL BLOCKS SHALL BE MOUNTED WITH STAINLESS STEEL SCREWS AND TAPPED HOLES. MOUNTING BOLTS SHALL BE STAINLESS STEEL.

(ITEM 322) JUNCTION BOX DIMENSIONS

BOX	HEIGHT	WIDTH	DEPTH
A	UNASSIGNED		
B	36"	30"	7"

NOTE:
DIMENSIONS SHOWN IN THE ABOVE TABLE ARE THE MINIMUM INSIDE DIMENSIONS THAT WILL BE ACCEPTED.

NUMBER AND THICKNESS OF SHIMS FOR EACH SHIM PACK

ONE NORMAL SHIM \ THICKNESS	1/8"	1/16"	1/32"
1/4"	2	1	2

NOTES

1. ALL CONDUITS HUBS SHALL BE LOCATED ON THE TOP, BOTTOM OR SIDES ONLY. CONDUIT HUBS IN THE BACK OF THE BOX WILL NOT BE ACCEPTED.
2. SPECIFICATIONS SHOWN ON THIS SHEET APPLY TO SIZE B JUNCTION BOXES ONLY. FOR SPECIFICATIONS OF SIZE A JUNCTION BOXES SEE DWG. NO. E26.
3. ALL TERMINAL BLOCKS SHALL BE DESIGNATED ACCORDING TO THE WIRE DESIGNATORS AS SHOWN ON THE WIRING DIAGRAMS.
4. A LEAD SHIM IS REQUIRED BETWEEN ALL JUNCTION BOXES AND CONCRETE WALL.
5. ALL WIRES ENTERING JUNCTION BOXES SHALL BE PLACED IN NEAT COMPACT WELL SUPPORTED BUNDLES FROM CONDUIT EXIT TO TERMINAL POINT WITH NYLON CABLE TIES AND STRAPS OR APPROVED EQUAL.
6. FOR TERMINAL BLOCK LAYOUTS SEE DWG. NOS. E26 AND E27.

E25

STATE OF LOUISIANA
DEPARTMENT OF HIGHWAYS

ELECTRICAL SYSTEM
JUNCTION BOX DETAILS-1
BAYOU DULARGE BRIDGE

MODJESKI AND MASTERS
CONSULTING ENGINEERS

DATE	DESCRIPTION	BY
	REVISIONS	

DATE: 7-15-74 | SCALE: NONE | DWG NO: 195
DRAWN BY: GAS | CHKD. BY: JMS | IN CHARGE: TS | APPROVED:

AS BUILT

368

ROUTE	STATE PROJECT	PARISH	SHEET NO.
LA. 315	245-03-41	TERREBONNE	196

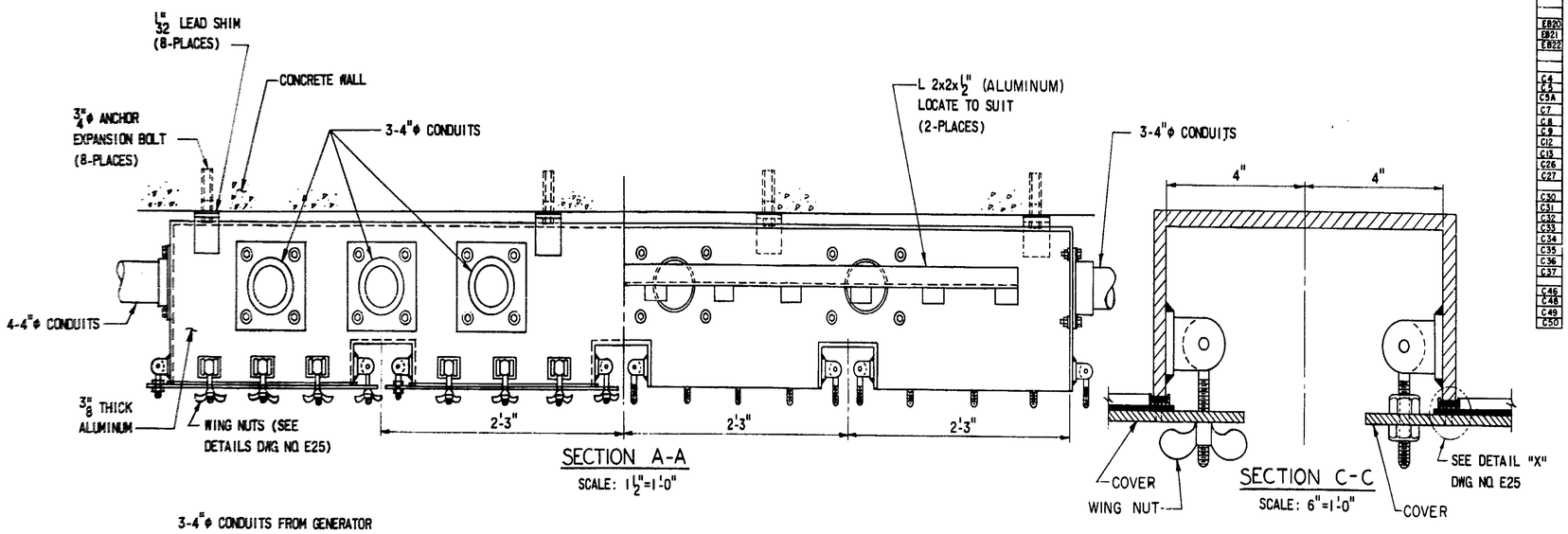

SECTION A-A
SCALE: 1 1/2"=1'-0"

SECTION C-C
SCALE: 6"=1'-0"

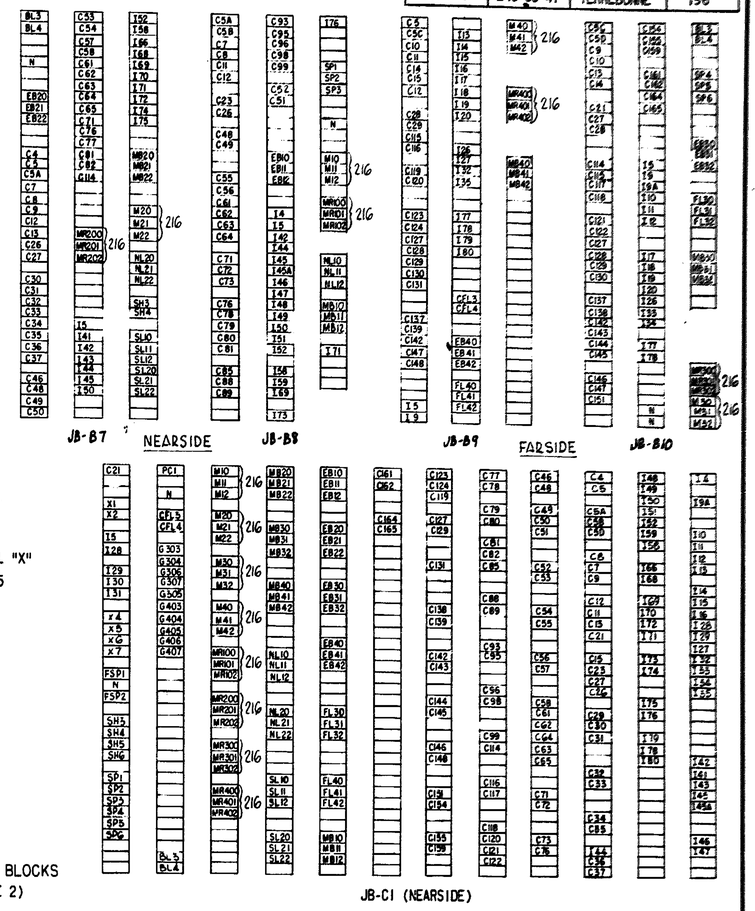

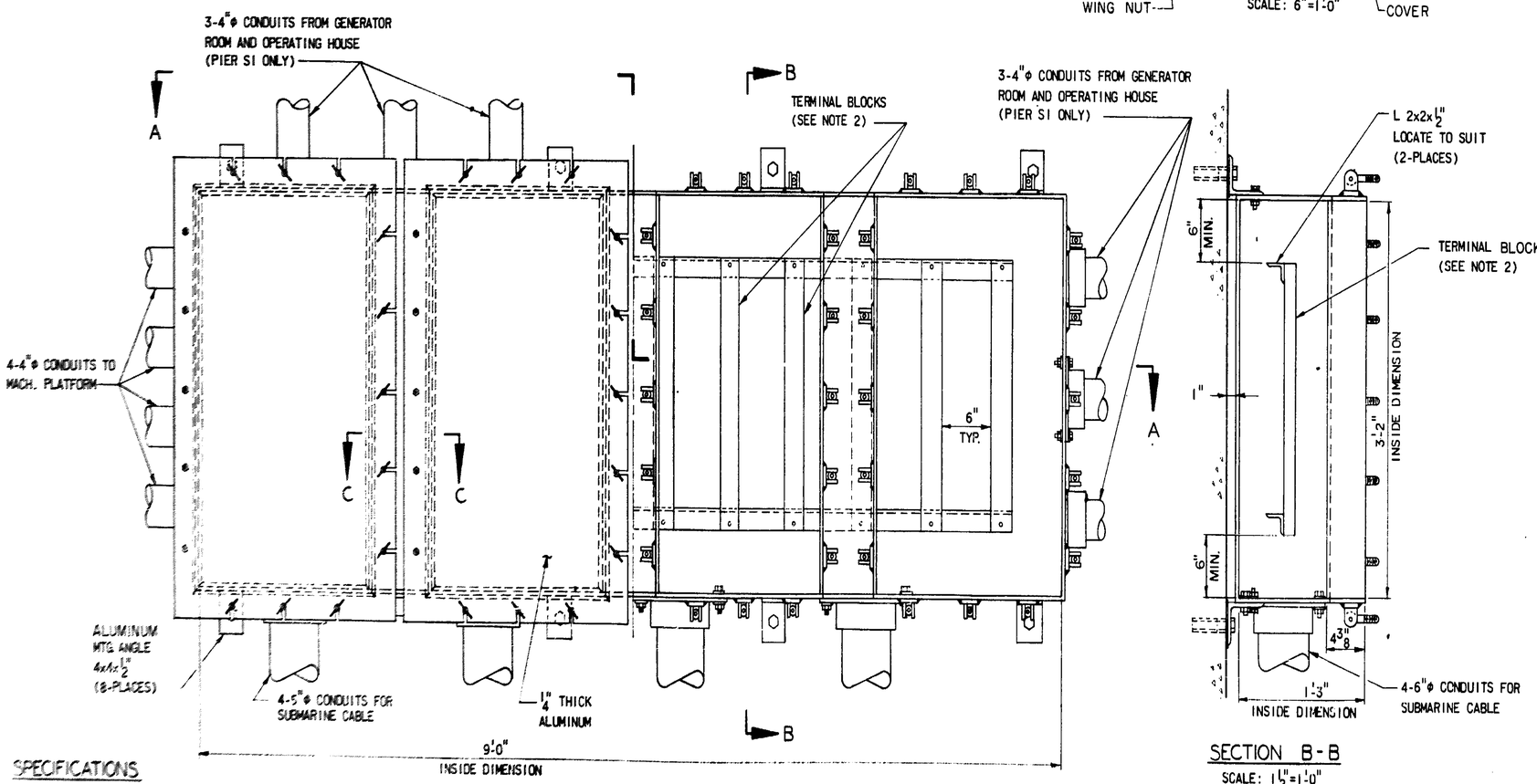

FRONT ELEVATION
SCALE: 1 1/2"=1'-0"

SIZE "C" JUNCTION BOX DETAILS

SECTION B-B
SCALE: 1 1/2"=1'-0"

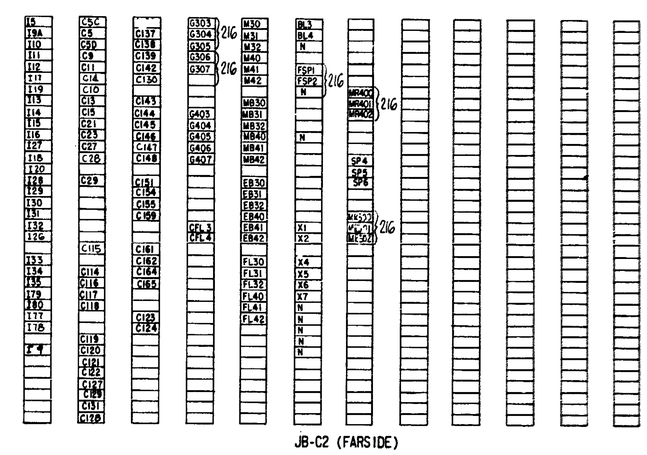

TERMINAL BOARD LAYOUT FOR JUNCTION BOXES (SEE NOTE 2 & 5)

(ITEM 322)
ALL TERM. BLOCKS ARE ITEM 217 EXCEPT WHERE NOTED 216.

SPECIFICATIONS

THE BOX SHALL BE MADE OF WELDED ALUMINUM PLATE 3/8" MINIMUM THICKNESS. ALL ALUMINUM USED IN THE MANUFACTURE OF THE BOX SHALL BE COPPER FREE ALUMINUM 6061-T6. ALL CORNERS, EDGES AND WELDED PARTS SHALL BE WELL ROUNDED & GROUND SMOOTH. ALL OPENINGS IN THE BOX SHALL BE REAMED SMOOTH. ALL HUBS SHALL BE CAST ALUMINUM, AND ALL BOLTS, NUTS AND OTHER HARDWARE SHALL BE STAINLESS STEEL. NEOPRENE GASKETS SHALL BE USED BETWEEN THE CONDUIT HUBS AND THE BOX. THE BOX COVERS SHALL BE FITTED WITH NEOPRENE GASKETS TO FORM A WATERPROOF SEAL. COVERS SHALL BE FABRICATED FROM 1/4" THICK ALUMINUM 6061-T6. THE COVER SHALL BE HELD CLOSED WITH 1/2" STAINLESS STEEL HINGED BOLTS, HAVING STAINLESS STEEL WING NUTS ON THREE SIDES. THE HINGED BOLTS ON THE REMAINING SIDE SHALL ACT AS HINGES FOR THE COVER BY USING HEXAGON NUTS AND LOCKWASHERS TO HOLD THE COVER INPLACE. HINGED BOLTS SHALL BE SET ON A MAXIMUM OF 10" CENTERS, EQUALLY SPACED ON OPPOSITE SIDES, NOT MORE THAN 4" FROM THE CORNERS ON ALL

SPECIFICATIONS (CONTINUED)
SIDES. TERMINAL BLOCKS SHALL BE ARRANGED IN ROWS AS SHOWN. TERMINAL BLOCKS SHALL BE MOUNTED WITH STAINLESS STEEL SCREWS AND TAPPED HOLES. MOUNTING BOLTS SHALL BE STAINLESS STEEL. BOX SHALL BE ANCHORED TO CONCRETE WALL AS SHOWN.

NOTES:

1. FOR CONDUIT DIAGRAMS SEE DWGS E9 & E10.
2. ALL TERMINAL BLOCKS SHALL BE BUCHANAN NO. B1125, 600 V, 12-CIRCUIT, HIGH PRESSURE BOX CONNECTOR, OR SQUARE D, TYPE U3, W/HIGH PRESSURE BOX CONNECTORS, NOTED 216
3. FOR LOCATION OF BOXES IN PIERS SEE DWG NO E28 & E29. FOR ARRANGEMENT OF CONDUITS SEE STRUCTURE DWGS.
4. CONTRACTOR SHALL RUN CONDUITS FROM JUNCTION BOXES AS REQUIRED. (SEE NOTE 1 ON DWG NO E25).
5. ALL TERMINAL BLOCKS SHALL BE DESIGNATED AS SHOWN ON THE WIRING DIAGRAM.
6. A LEAD SHIM IS REQUIRED BETWEEN ALL JUNCTION BOXES AND CONCRETE WALL.

NOTES (CONTINUED)

7. ALL WIRES ENTERING JUNCTION BOXES SHALL BE PLACED IN NEAT, COMPACT, WELL SUPPORTED BUNDLES FROM EXIT TO TERMINAL POINT WITH NYLON CABLE TIES AND STRAPS OR APPROVED EQUAL.
8. ALL CONDUIT HUBS SHALL BE LOCATED ON TOP, BOTTOM OR SIDES ONLY. CONDUIT HUBS IN THE BACK OR FRONT WILL NOT BE ACCEPTED.

E. J. Guillory

E 26

STATE OF LOUISIANA
DEPARTMENT OF HIGHWAYS

ELECTRICAL SYSTEM
JUNCTION BOX DETAILS - 2
BAYOU DULARGE BRIDGE

MODJESKI AND MASTERS
CONSULTING ENGINEERS

DATE	DESCRIPTION	BY
	REVISIONS	

DATE: 9-12-74 | SCALE: AS NOTED | DWG.NO.: 196
DRAWN BY: GAS | CHKD.BY: JMS | IN CHARGE: TS | APPROVED:

AS BUILT

ROUTE	STATE PROJECT	PARISH	SHEET NO.
LA. 315	245-03-41	TERREBONNE	197

369

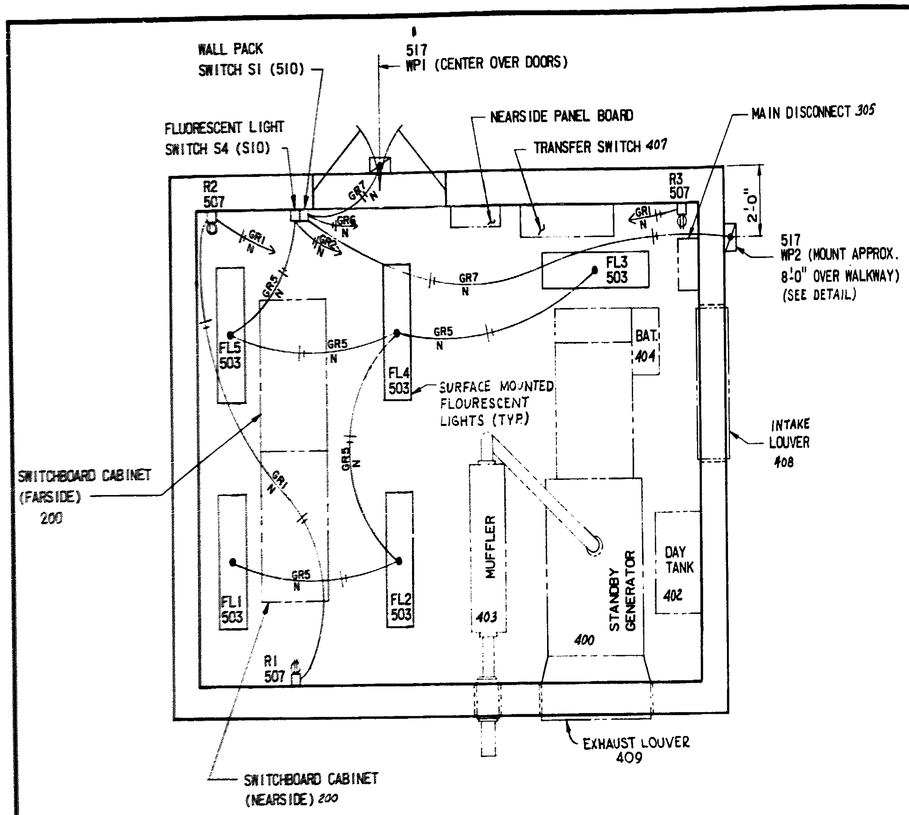

GENERATOR ROOM PLAN
GENERAL POWER & LIGHTING
SCALE: 3/8"=1'-0"

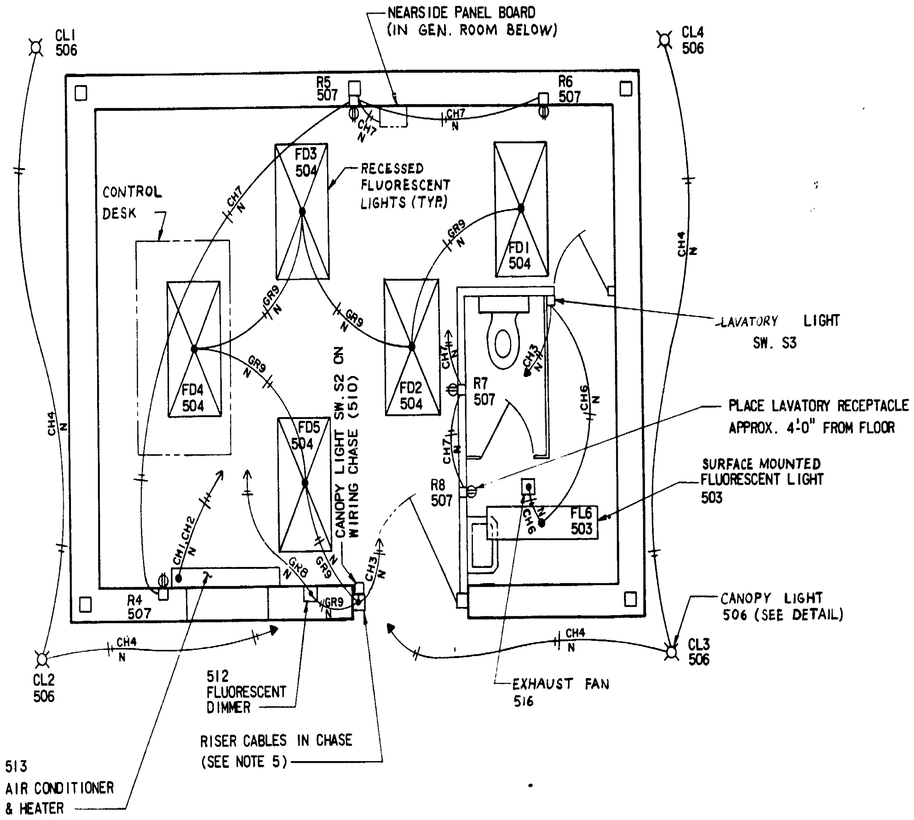

OPERATING HOUSE PLAN
GENERAL POWER & LIGHTING
SCALE: 3/8"=1'-0"
(SEE NOTE 6)

→ = RUN TO CANOPY LIGHT SWITCH AT DOORWAY.
→ = RUN TO NEARSIDE PANELBOARD.

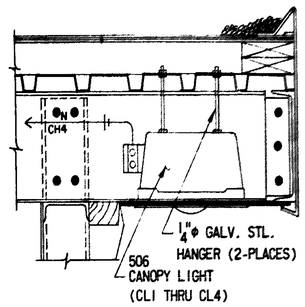

CANOPY LIGHTING FIXTURE (CL)
SCALE: 1 1/2"=1'-0"

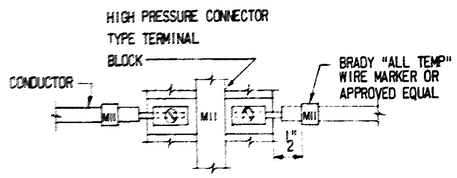

CONDUCTOR IDENTIFICATION DETAIL
NO SCALE

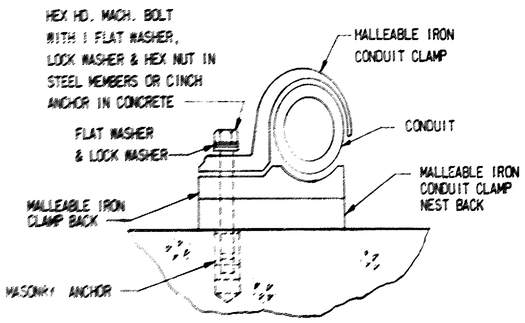

CONDUIT FASTENING DETAIL
NO SCALE

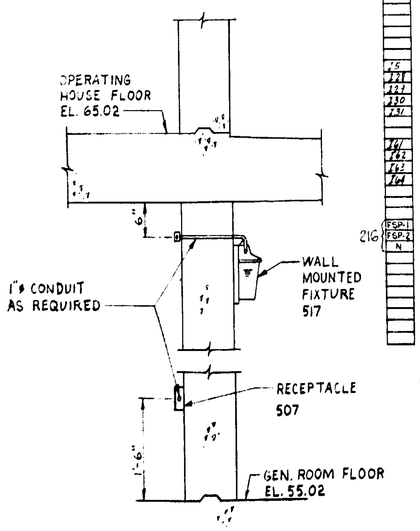

EXTERIOR WALL MOUNTED FIXTURE (WP)
SCALE: 3/4"=1'-0"

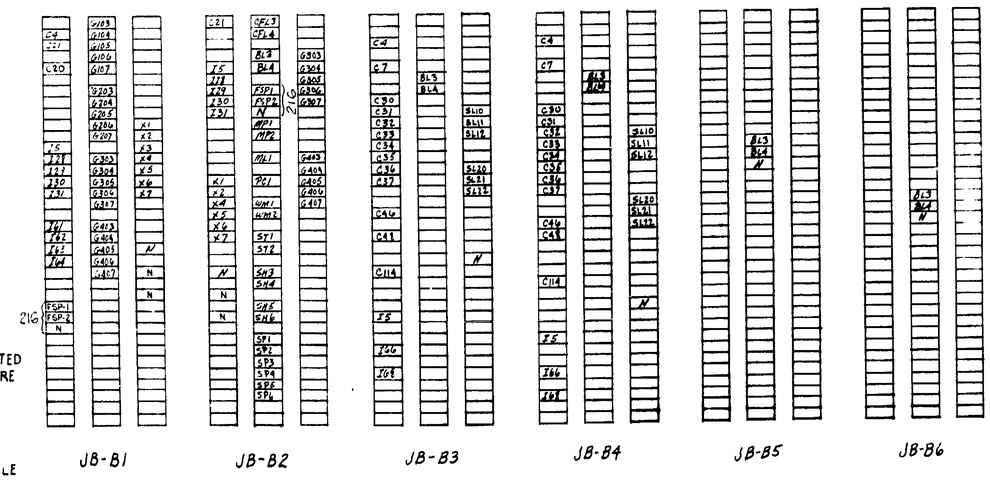

TERMINAL BOARD LAYOUT FOR JUNCTION BOXES (SEE NOTE 7 & 8)
(ITEM 322)
SCALE: NONE
ALL TERMINAL BLOCKS ARE ITEM 217 EXCEPT WHERE NOTED 216.

NOTES:

1. WITH THE EXCEPTION OF THE LAVATORY FIXTURE, FLUORESCENT LIGHTING FIXTURES IN THE OPERATING HOUSE SHALL HAVE DIMMING BALLASTS.
2. ALL EXPOSED CONDUIT SHALL BE RIGID ALUMINUM IN ACCORDANCE WITH SECTION 809.42(f) OF THE STANDARD SPECIFICATIONS UNLESS NOTED. (ITEM 324).
3. FOR FURTHER DETAILS OF ELECTRICAL CIRCUITS SHOWN ON THIS SHEET SEE DWG. NO. E8.
4. A LEAD SHIM 1/32" THK. IS REQUIRED BETWEEN ALL ELECTRICAL EQUIPMENT & CONCRETE.
5. EXTEND OVERHEAD CONDUCTORS CH3, N & SP8, N FROM PANEL BOARD TO SPACE ABOVE FINISHED CEILING THRU WIRING CHASE AT DOOR FRAME. SEE DWG. NO. 118.
6. WIRING FROM PANELBOARD TO RECEPTACLE BOXES AND AIR CONDITIONER IN OPERATING HOUSE SHALL BE RUN THRU GENERATOR ROOM TO CONDUIT RISERS PROVIDED. (SEE STRUCTURAL DWG. NO. 117)
7. ALL TERMINAL BLOCKS SHALL MEET LDH STANDARD SPECIFICATION 809.43(h).
8. FOR DETAILS OF JUNCTION BOXES JB-B1 THRU JB-B6 SEE DWG. E25.

STATE OF LOUISIANA
DEPARTMENT OF HIGHWAYS

ELECTRICAL SYSTEM
MISCELLANEOUS DETAILS - 1
BAYOU DULARGE BRIDGE

E27

MODJESKI AND MASTERS
CONSULTING ENGINEERS

DATE	DESCRIPTION	BY
	REVISIONS	

DATE: 11-14-74 | SCALE: AS NOTED | DWG.NO.: 197
DRAWN BY: GAS | CHKD.BY: JMS | IN CHARGE: TS | APPROVED:

AS BUILT

ROUTE	STATE PROJECT	PARISH	SHEET NO.
LA. 315	245-03-41	TERREBONNE	198

370

NOTES:

1. CONTRACTOR TO LOCATE EXTREME LIFT LIMIT SWITCHES ON C12x20.7 CHANNEL IN FIELD TO PROPERLY ACTUATE PLUNGER WHEN LEAF IS IN THE RAISED POSITION.
2. ALL ELEVATIONS SHOWN ARE MEAN SEA LEVEL. 1929 GENERAL ADJUSTMENT, U.S.C. & G.S. +.8 MEAN SEA LEVEL=0 MEAN LOW GULF LEVEL.
3. FOR FURTHER INFORMATION ON SUB-CABLE, SEE LETTER DATED 9-16-1968 FROM 8TH. COAST GUARD DISTRICT NO. 3267 SER. 8020.
4. FOR SECTION E-E & C-C SEE DWG. E29.

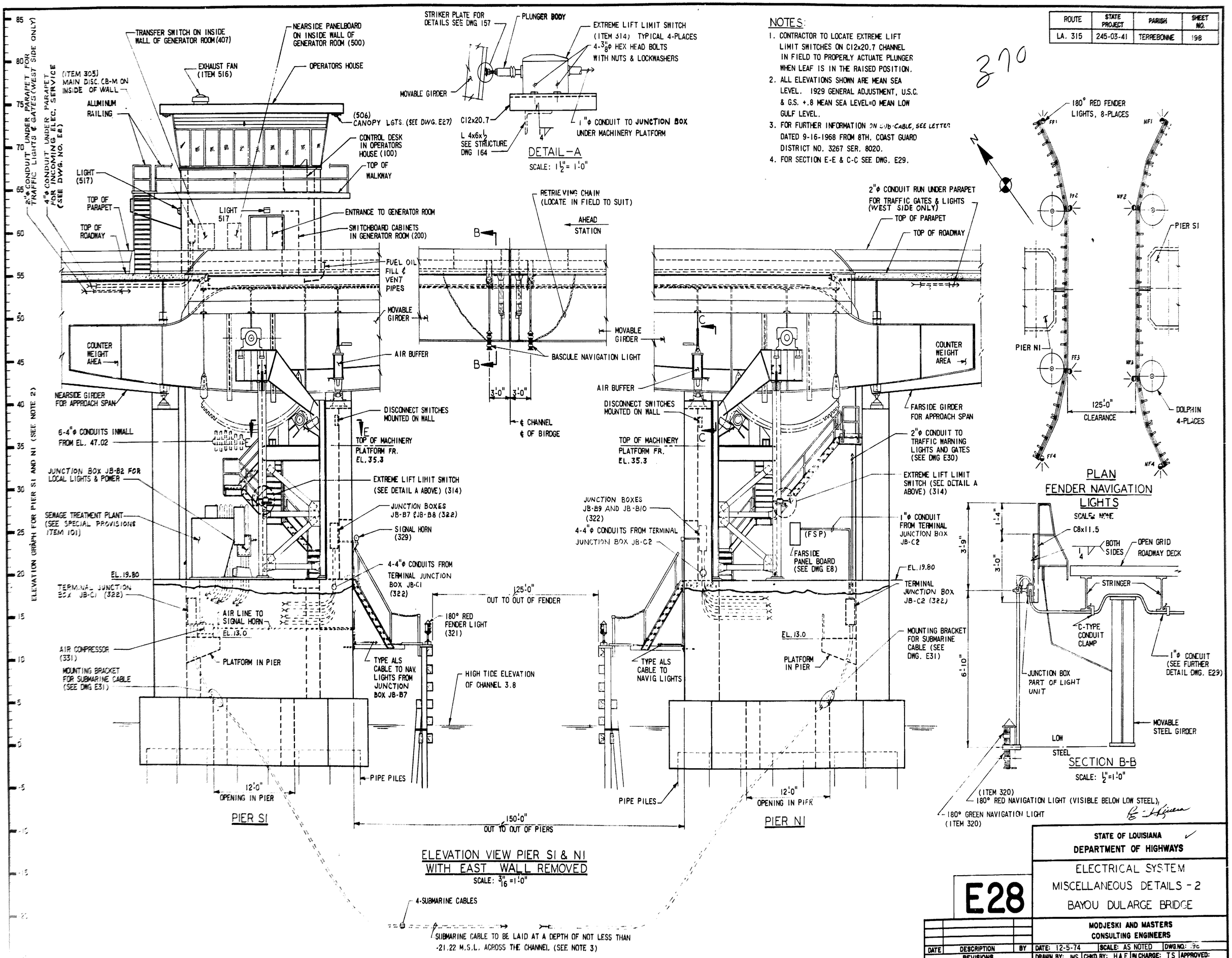

STATE OF LOUISIANA
DEPARTMENT OF HIGHWAYS

ELECTRICAL SYSTEM
MISCELLANEOUS DETAILS - 2
BAYOU DULARGE BRIDGE

E28

MODJESKI AND MASTERS
CONSULTING ENGINEERS

DATE	DESCRIPTION	BY
	REVISIONS	

DATE: 12-5-74 | SCALE: AS NOTED | DWG.NO: 198
DRAWN BY: JMS | CHKD.BY: HAE | IN CHARGE: TS | APPROVED:

AS BUILT

ROUTE	STATE PROJECT	PARISH	SHEET NO.
LA. 315	245-03-41	TERREBONNE	199

371

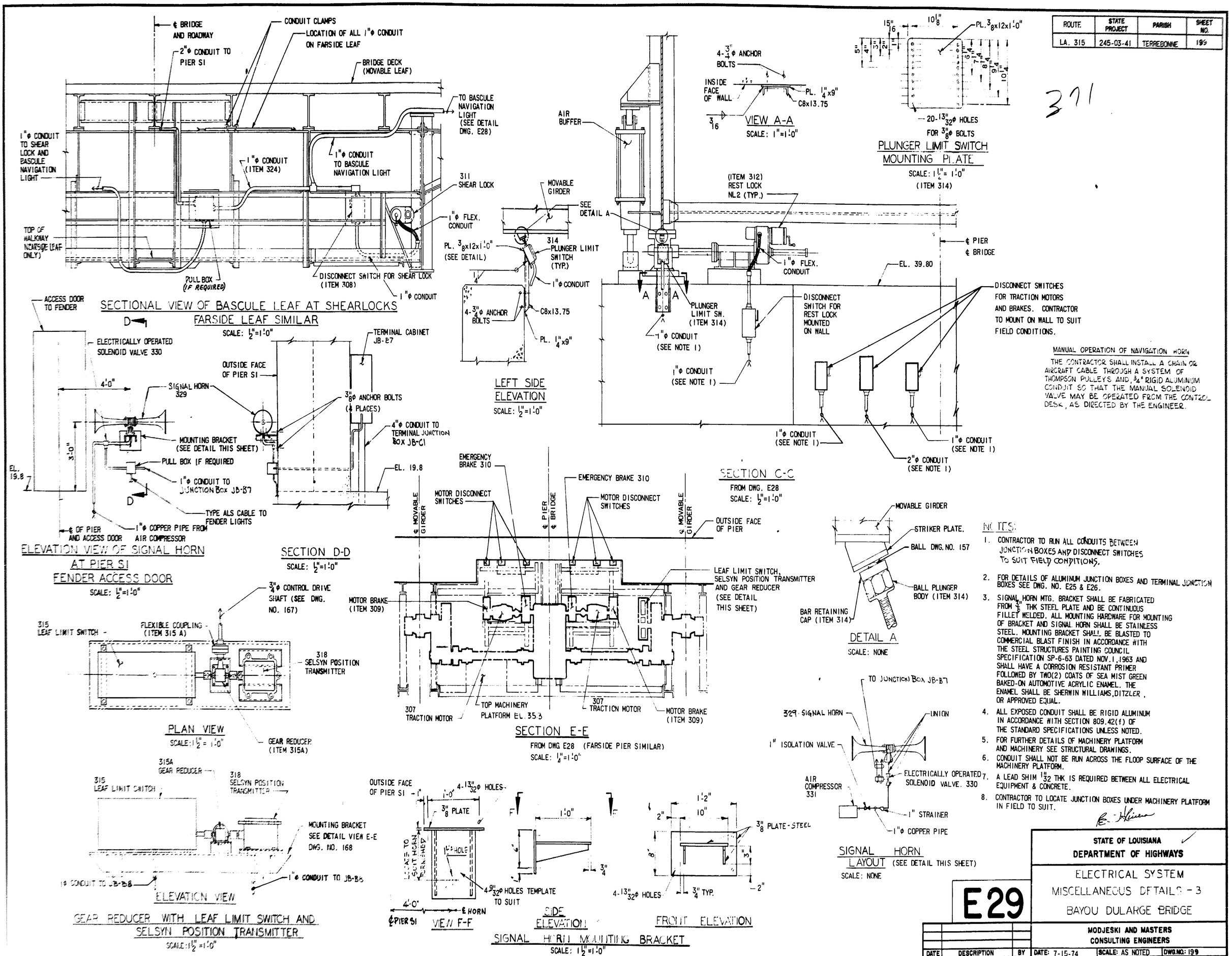

MANUAL OPERATION OF NAVIGATION HORN

THE CONTRACTOR SHALL INSTALL A CHAIN OR AIRCRAFT CABLE THROUGH A SYSTEM OF THOMPSON PULLEYS AND, 3/4" RIGID ALUMINUM CONDUIT SO THAT THE MANUAL SOLENOID VALVE MAY BE OPERATED FROM THE CONTROL DESK, AS DIRECTED BY THE ENGINEER.

NOTES:

1. CONTRACTOR TO RUN ALL CONDUITS BETWEEN JUNCTION BOXES AND DISCONNECT SWITCHES TO SUIT FIELD CONDITIONS.
2. FOR DETAILS OF ALUMINUM JUNCTION BOXES AND TERMINAL JUNCTION BOXES SEE DWG. NO. E25 & E26.
3. SIGNAL HORN MTG. BRACKET SHALL BE FABRICATED FROM 3/8" THK STEEL PLATE AND BE CONTINUOUS FILLET WELDED. ALL MOUNTING HARDWARE FOR MOUNTING OF BRACKET AND SIGNAL HORN SHALL BE STAINLESS STEEL. MOUNTING BRACKET SHALL BE BLASTED TO COMMERCIAL BLAST FINISH IN ACCORDANCE WITH THE STEEL STRUCTURES PAINTING COUNCIL SPECIFICATION SP-6-63 DATED NOV.1,1963 AND SHALL HAVE A CORROSION RESISTANT PRIMER FOLLOWED BY TWO(2) COATS OF SEA MIST GREEN BAKED-ON AUTOMOTIVE ACRYLIC ENAMEL. THE ENAMEL SHALL BE SHERWIN WILLIAMS, DITZLER, OR APPROVED EQUAL.
4. ALL EXPOSED CONDUIT SHALL BE RIGID ALUMINUM IN ACCORDANCE WITH SECTION 809.42(f) OF THE STANDARD SPECIFICATIONS UNLESS NOTED.
5. FOR FURTHER DETAILS OF MACHINERY PLATFORM AND MACHINERY SEE STRUCTURAL DRAWINGS.
6. CONDUIT SHALL NOT BE RUN ACROSS THE FLOOR SURFACE OF THE MACHINERY PLATFORM.
7. A LEAD SHIM 1/32" THK IS REQUIRED BETWEEN ALL ELECTRICAL EQUIPMENT & CONCRETE.
8. CONTRACTOR TO LOCATE JUNCTION BOXES UNDER MACHINERY PLATFORM IN FIELD TO SUIT.

STATE OF LOUISIANA
DEPARTMENT OF HIGHWAYS

ELECTRICAL SYSTEM
MISCELLANEOUS DETAILS - 3
BAYOU DULARGE BRIDGE

E29

MODJESKI AND MASTERS
CONSULTING ENGINEERS

DATE	DESCRIPTION	BY
	REVISIONS	

DATE: 7-15-74 | SCALE: AS NOTED | DWG.NO.: 199
DRAWN BY: GAS | CHKD.BY: JMS | IN CHARGE: TS | APPROVED:

AS BUILT

ROUTE	STATE PROJECT	PARISH	SHEET NO.
LA.315	245-03-41	TERREBONNE	200

372

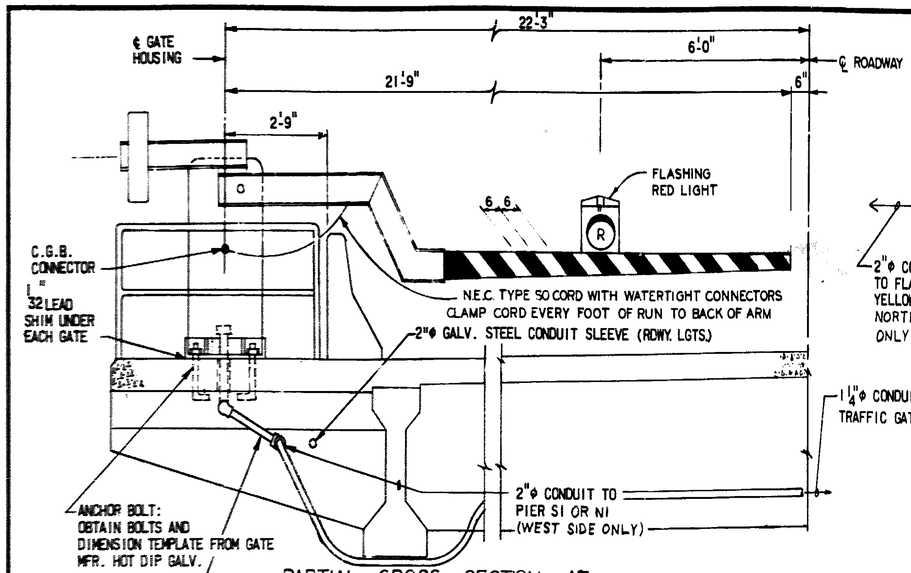

PARTIAL CROSS SECTION AT TRAFFIC GATE

SCALE: 1/2"=1'-0"

(ITEM 313)

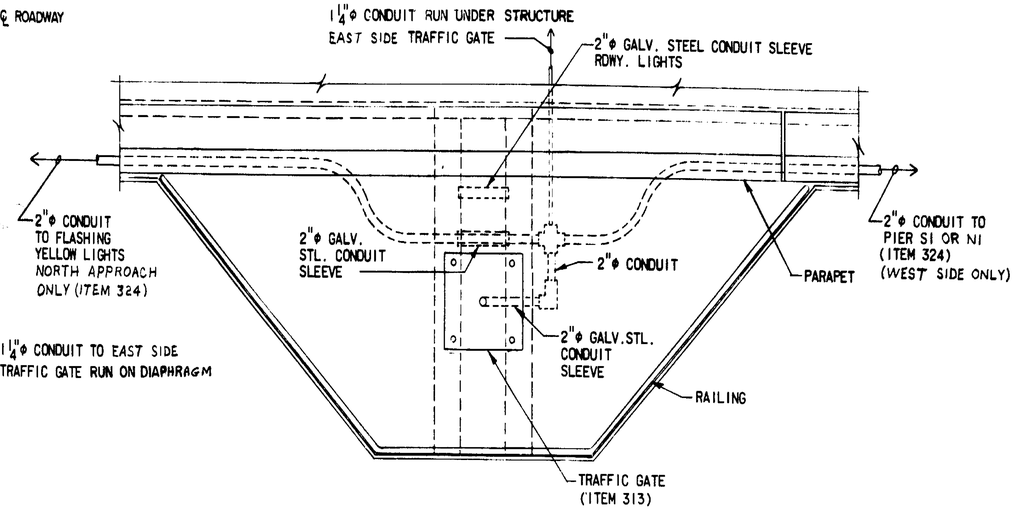

PLAN

SCALE: 1/2"=1'-0"

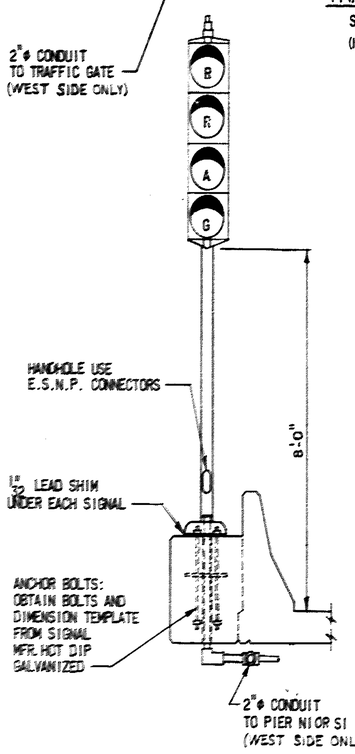

PARTIAL CROSS SECTION AT TRAFFIC SIGNAL

PARTIAL CROSS SECTION AT TRAFFIC SIGNAL (ITEM 317)

SCALE: 1/2"=1'-0"

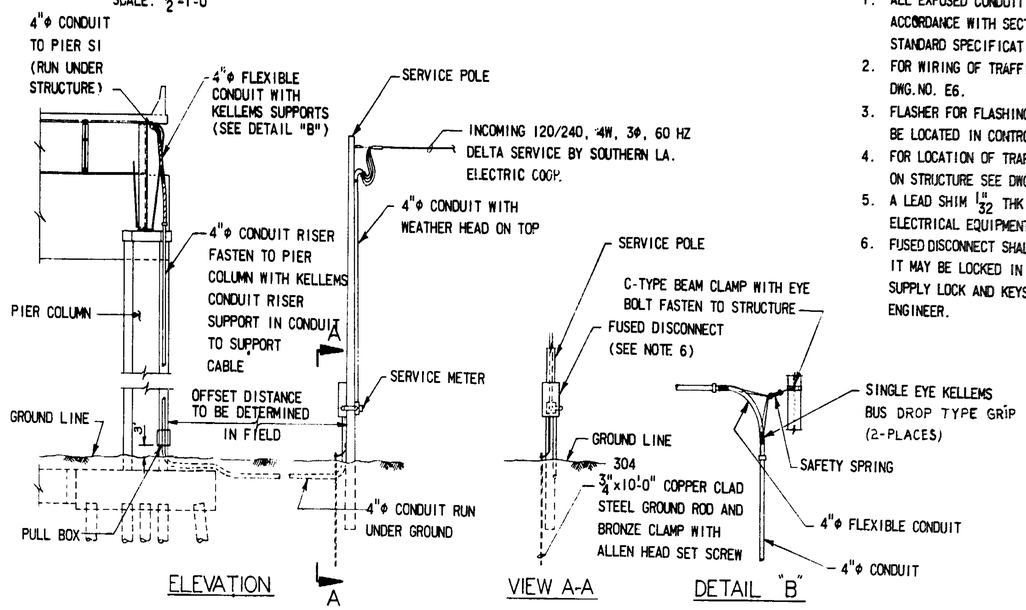

ELEVATION

VIEW A-A

DETAIL "B"

INCOMING UNDERGROUND SERVICE DETAILS AT PIER S2-WEST SIDE

SCALE: NONE

NOTE:

1. ALL EXPOSED CONDUIT SHALL BE RIGID ALUMINUM IN ACCORDANCE WITH SECTION 809.42(f) OF THE STANDARD SPECIFICATIONS UNLESS NOTED.
2. FOR WIRING OF TRAFFIC SIGNALS AND GATE SEE DWG. NO. E6.
3. FLASHER FOR FLASHING RED LIGHT ON GATE ARM SHALL BE LOCATED IN CONTROL DESK.
4. FOR LOCATION OF TRAFFIC GATES AND SIGNAL LIGHTS ON STRUCTURE SEE DWG. NO. E1.
5. A LEAD SHIM 1/32" THK IS REQUIRED BETWEEN ALL ELECTRICAL EQUIPMENT AND CONCRETE.
6. FUSED DISCONNECT SHALL HAVE PROVISIONS SO THAT IT MAY BE LOCKED IN THE FIELD. CONTRACTOR SHALL SUPPLY LOCK AND KEYS AS SPECIFIED BY THE ENGINEER.

NOTE:

4" CONDUCT CROSSOVERS FOR TRAFFIC LIGHTS AND FLASHER SHALL BE LOCATED AT NEAREST DIAPHAGM AND INSTALLED AS SHOWN FOR TRAFFIC GATE CROSSOVER.

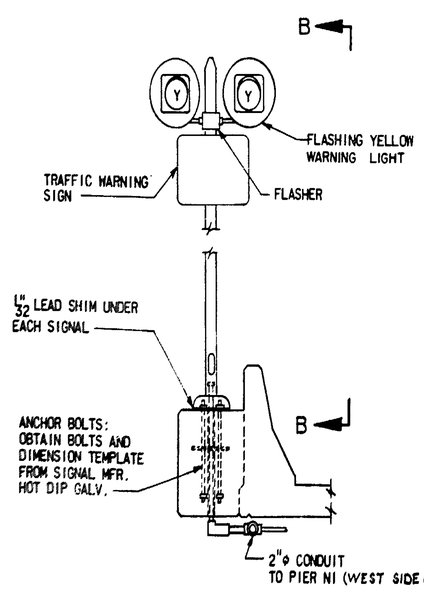

PARTIAL CROSS SECTION AT FLASHING YELLOW LIGHTS (ITEM 316)

SCALE: 1/2"=1'-0"

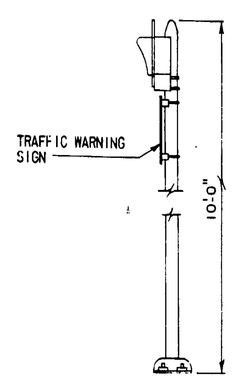

VIEW B-B

SCALE: 1/2"=1'-0"

E30

STATE OF LOUISIANA
DEPARTMENT OF HIGHWAYS

ELECTRICAL SYSTEM
MISCELLANEOUS DETAILS-4
BAYOU DULARGE BRIDGE

MODJESKI AND MASTERS
CONSULTING ENGINEERS

DATE	DESCRIPTION	BY
	REVISIONS	

DATE: 7-10-74 | SCALE: AS NOTED | DWG.NO.: 200
DRAWN BY: DEH | CHKD. BY: JMS | IN CHARGE: TS | APPROVED:

AS BUILT

ROUTE	STATE PROJECT	PARISH	SHEET NO.
LA. 315	245-03-41	TERREBONNE	200A

378

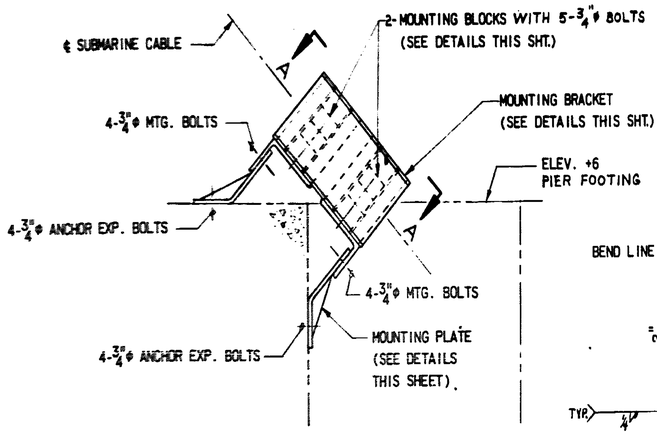

MOUNTING BRACKET ASSY. SUBMARINE CABLE

(FOR LOCATION IN PIERS SEE DWG. E28)

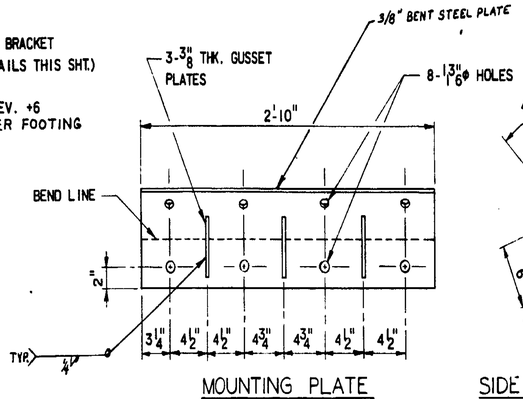

MOUNTING PLATE

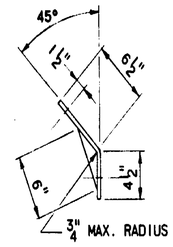

SIDE ELEVATION

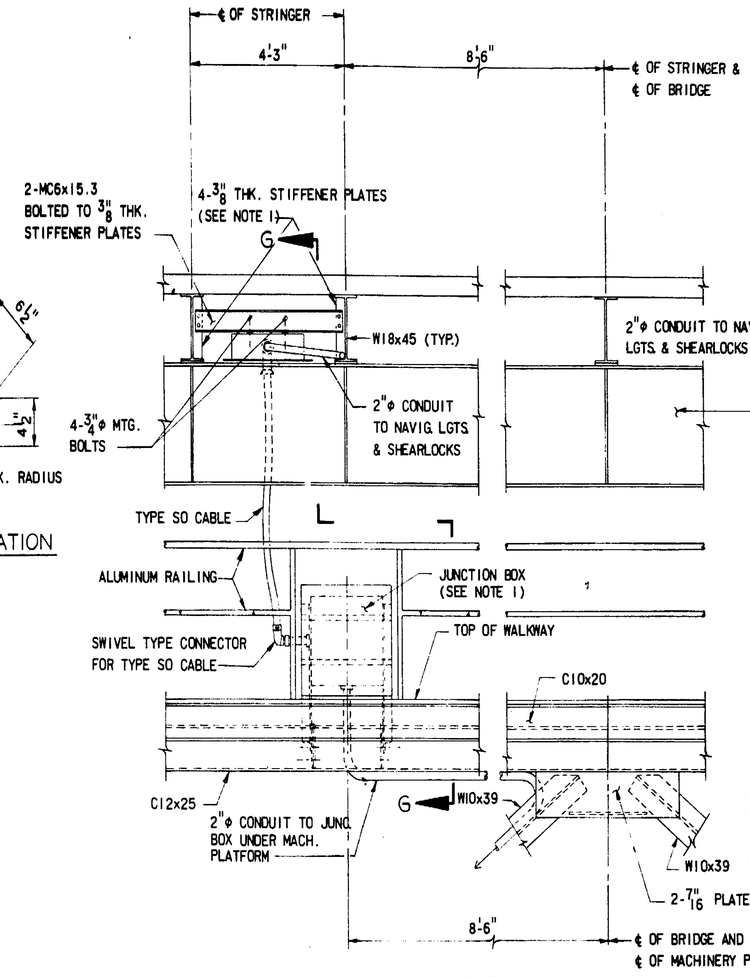

SECTION F-F (TYP. PIER S1 & N1)

SCALE: 1/2"=1'-0"

(SEE DWG E28)

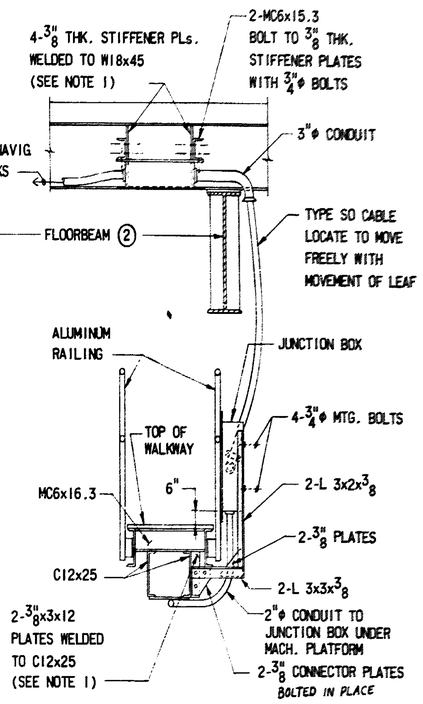

SECTION G-G

SCALE: 1/2"=1'-0"

NOTES:

1. LOCATION OF MOUNTING STIFFENERS, ANGLES AND CONNECTOR PLATES SHALL BE DETERMINED BY THE SIZE OF THE BOXES FURNISHED.

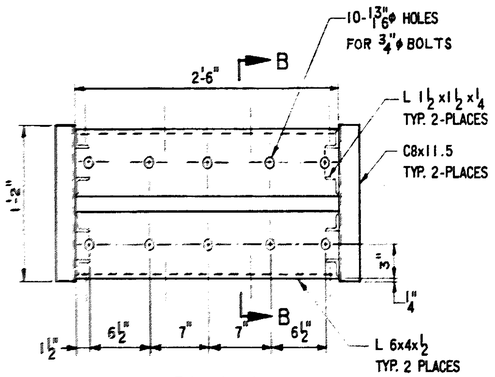

VIEW A-A

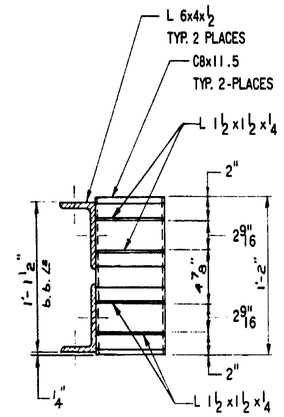

SECTION B-B

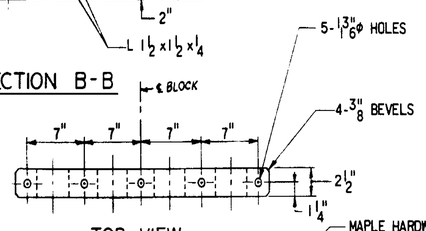

TOP VIEW

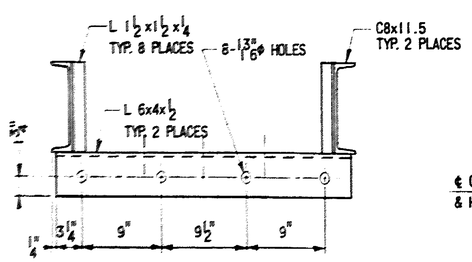

FRONT ELEVATION

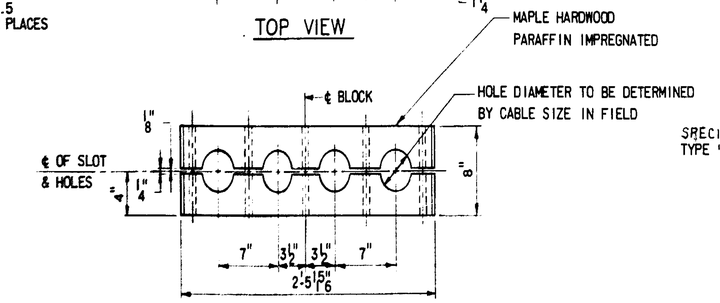

FRONT ELEVATION

MOUNTING BLOCK DETAILS

ADJUST BLOCKS IN FIELD AS REQD. TO FIT CABLE AND RETAINER GUIDES.

MOUNTING BRACKET DETAILS

SCALE: 1 1/2"=1'-0"

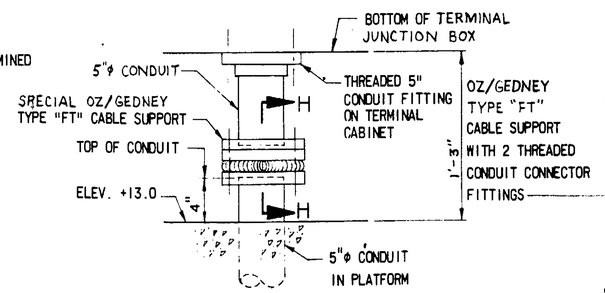

DETAIL OF SUBMARINE CABLE SUPPORT (SEE DWG. E28)

SCALE: 1 1/2"=1'-0"

(TYPICAL 8 PLACES)

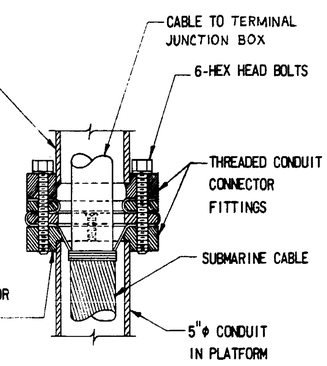

SECTION H-H

SCALE: NONE

E31

STATE OF LOUISIANA
DEPARTMENT OF HIGHWAYS

ELECTRICAL SYSTEM
MISCELLANEOUS DETAILS - 5
BAYOU DULARGE BRIDGE

MODJESKI AND MASTERS
CONSULTING ENGINEERS

DATE	DESCRIPTION	BY
	REVISIONS	

DATE: 12-12-74 | SCALE: AS NOTED | DWG.NO.: 200A
DRAWN BY: GAS | CHKD. BY: J.M.S. | IN CHARGE: TS | APPROVED:

AS BUILT