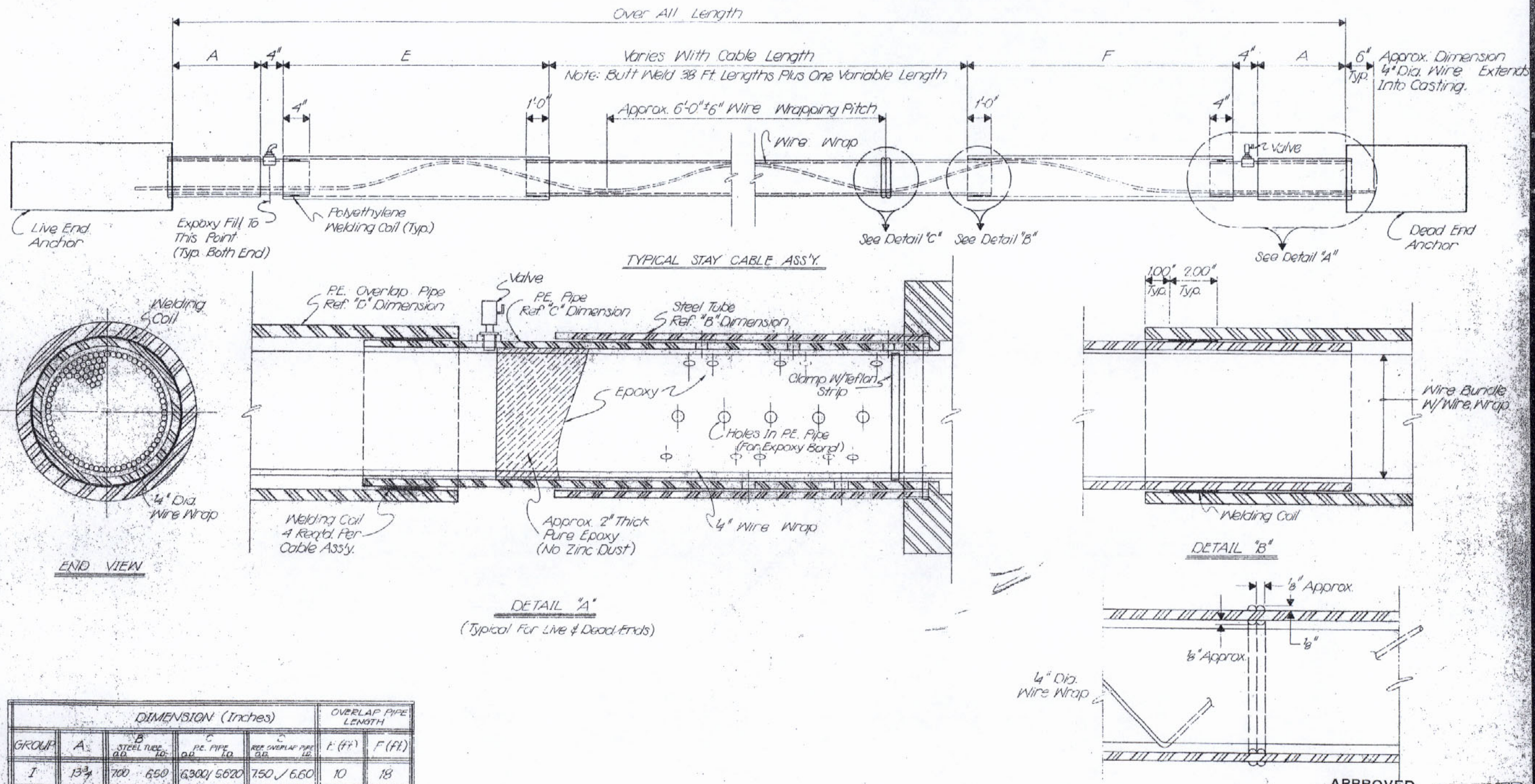

	DIMENSION (Inches)					OVERLAP PIPE LENGTH	
GROUP	A	B STEEL TUBE O.D.	B STEEL TUBE I.D.	C P.E. PIPE O.D.	C P.E. PIPE I.D.	REF. OVERLAP PIPE O.D.	REF. OVERLAP PIPE I.D.	E (Ft.)	F (Ft.)
I	13 3/4	7.00	6.50	6.300	5.620	7.50	6.60	10	18
II	13 3/4	7.00	6.50	6.300	5.620	7.50	6.60	10	18
⚠ IV	13 3/4	5.00	4.50	4.350	3.842	5.376	4.67	10	18
⚠ V	15 3/8	7.75	7.25	7.125	6.285	8.25	7.46	10	18

APPROVED
FOR SIZE OF MATERIAL AND STRENGTH OF CONNECTIONS
BRIDGE DESIGN SECTION
LOUIS A. GARRIDO BRIDGE DESIGN ENGINEER
By R.E.B. Date JUN 1 5 1981

APPROVED
For Design, Material & Workmanship
Frankland & Lienhard
By I.V. 6-8-81

RECEIVED
MAY 20 1981

MAY 1 9 1981

THE DESIGN CORPORATION

PROJECT NUMBER | STATE | CONTRACTOR | DRAWING | SHEET NUMBER

JOB NO. 8-8-8-8
DRAWING NO.

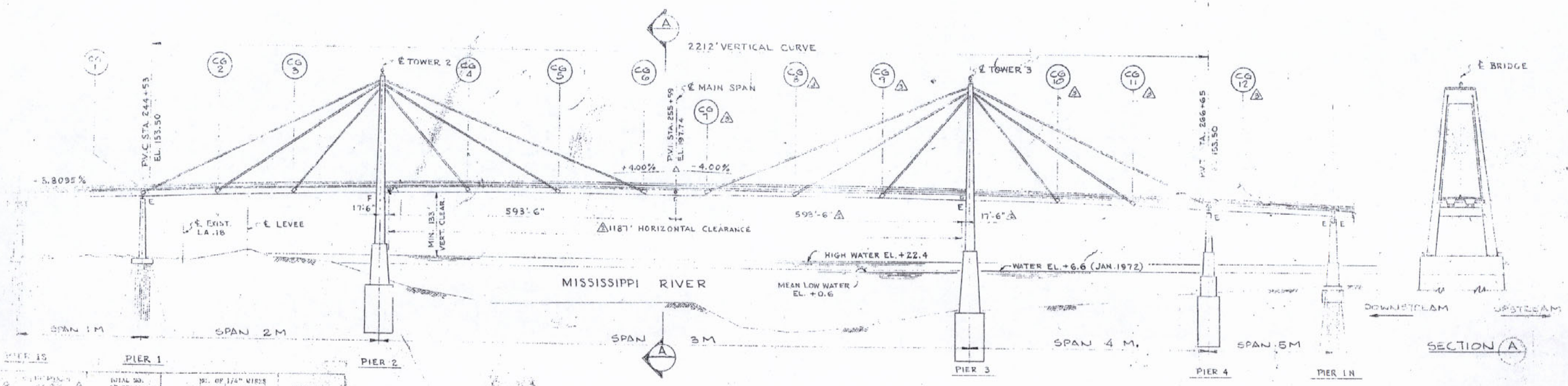

ELEVATION

LOOKING UPSTREAM

CABLE NO.	SHIPPING MARK	TOTAL NO. OF STAYS	NO. OF 1/4" WIRES PER CABLE	RAM SIZE
1	1-S-1		271	1000 Ton
2	1-S-2		271	1000 Ton
3	1-S-3		271	1000 Ton
4	1-S-4		271	1000 Ton
5	1-S-5		271	1000 Ton
6	1-S-6		271	1000 Ton
7	1-S-7		271	1000 Ton
8	1-S-8		271	1000 Ton
9	2-1-1	8	211	600 Ton
10	2-1-2		211	600 Ton
11	2-1-3		211	600 Ton
12	2-1-4		211	600 Ton
13	2-1-5		211	600 Ton
14	2-1-6		211	600 Ton
15	2-1-7		211	600 Ton
16	2-1-8		211	600 Ton
17	3-2-1	8	211	600 Ton
18	3-2-2		211	600 Ton
19	3-2-3		211	600 Ton
20	3-2-4		211	600 Ton
21	3-2-5		211	600 Ton
22	3-2-6		211	600 Ton
23	3-2-7		211	600 Ton
24	3-2-8		211	600 Ton
25	4-3-1	8	103	600 Ton
26	4-3-2		103	600 Ton
27	4-3-3		103	600 Ton
28	4-3-4		103	600 Ton
29	4-3-5		103	600 Ton
30	4-3-6		103	600 Ton
31	4-3-7		103	600 Ton
32	4-3-8		103	600 Ton
33	5-4-1	8	211	600 Ton
34	5-4-2		211	600 Ton
35	5-4-3		211	600 Ton
36	5-4-4		211	600 Ton
37	5-4-5		211	600 Ton
38	5-4-6		211	600 Ton
39	5-4-7		211	600 Ton
40	5-4-8		211	600 Ton
41	6-5-1	8	211	600 Ton
42	6-5-2		211	600 Ton
43	6-5-3		211	600 Ton
44	6-5-4		211	600 Ton
45	6-5-5		211	600 Ton
46	6-5-6		211	600 Ton
47	6-5-7		211	600 Ton
48	6-5-8		211	600 Ton
49	7-6-1	8	103	600 Ton
50	7-6-2		103	600 Ton
51	7-6-3		103	600 Ton
52	7-6-4		103	600 Ton
53	7-6-5		103	600 Ton
54	7-6-6		103	600 Ton
55	7-6-7		103	600 Ton
56	7-6-8		103	600 Ton
57	8-7-1	8	211	600 Ton
58	8-7-2		211	600 Ton
59	8-7-3		211	600 Ton
60	8-7-4		211	600 Ton
61	8-7-5		211	600 Ton
62	8-7-6		211	600 Ton
63	8-7-7		211	600 Ton
64	8-7-8		211	600 Ton
65	9-8-1	8	271	1000 Ton
66	9-8-2		271	1000 Ton
67	9-8-3		271	1000 Ton
68	9-8-4		271	1000 Ton
69	9-8-5		271	1000 Ton
70	9-8-6		271	1000 Ton
71	9-8-7		271	1000 Ton
72	9-8-8		271	1000 Ton

APPROVED
For Design, Material & Workmanship
Frankland & Lienhard
By F.S. 3-6-81

APPROVED
FOR SIZE OF MATERIAL AND STRENGTH OF CONNECTIONS
BRIDGE DESIGN SECTION
LOUIS A. GARRIDO BRIDGE DESIGN ENGINEER
By KEB Date MAR 12 1981

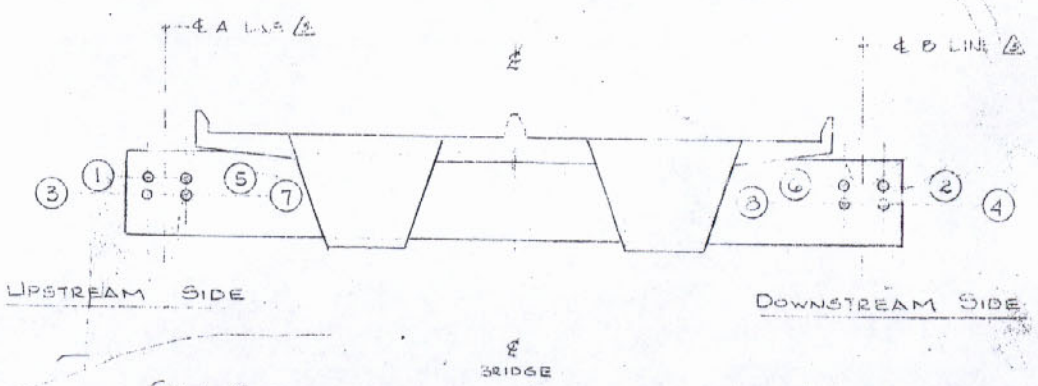

STAY CABLE TYPICAL POSITION LOCATIONS.

NOTES:

1.) CABLE LENGTH A CORRESPONDS TO A-LINE, MELBOURNE BROS. SHEET NO. EP24-A, REV. 7, 10-3-80 AND REPRESENTS THE LENGTH OF THE STAY CABLES ON THE WEST SIDE OF THE BRIDGE.

2.) CABLE LENGTH B CORRESPONDS TO B-LINE, MELBOURNE BROS. SHEET NO. EP24-B, REV. 6, 10-3-80 AND REPRESENTS THE LENGTH OF THE STAY CABLES ON THE EAST SIDE OF THE BRIDGE.

LEGEND
SHIPPING MARK
3 · 3 · 2
CABLE NO. CROSS SECTION NO.

FOR FINAL APPROVAL

FEB 30 1981

RECEIVED FEB 25 1981

The Parsons Corporation
8918 TESORO DRIVE
SAN ANTONIO

CONTRACTOR
WILLIAMS BROTHERS CONSTRUCTION CO., INC.
THI INTERNATIONAL

PROJECT
MISSISSIPPI RIVER BRIDGE (LULING)
MAIN RIVER CROSSING SUPERSTRUCTURE
ST. CHARLES PARISH

STATE

STAY CABLE ORIENTATION AND POSITIONINGS

DATE	REVISION DESCRIPTION	REV. NO.
8/8/80	ADDED PARTIAL CABLE LENGTHS	2
5/20/80	REVISED ACCORDING TO APPROVED AS NOTED ON DRAWING RECEIVED 5-19-80 — CABLE 37-3-4 ET DIMENSIONS CORRECTED	3
10/28/80	CABLE LENGTHS REVISED AS PER MBC DRAWING EP-24 A (REV 7) & EP 24 B (REV 6)	4
2-20-81	CHANGED CABLE NUMBERS PER IAI REQUEST	5

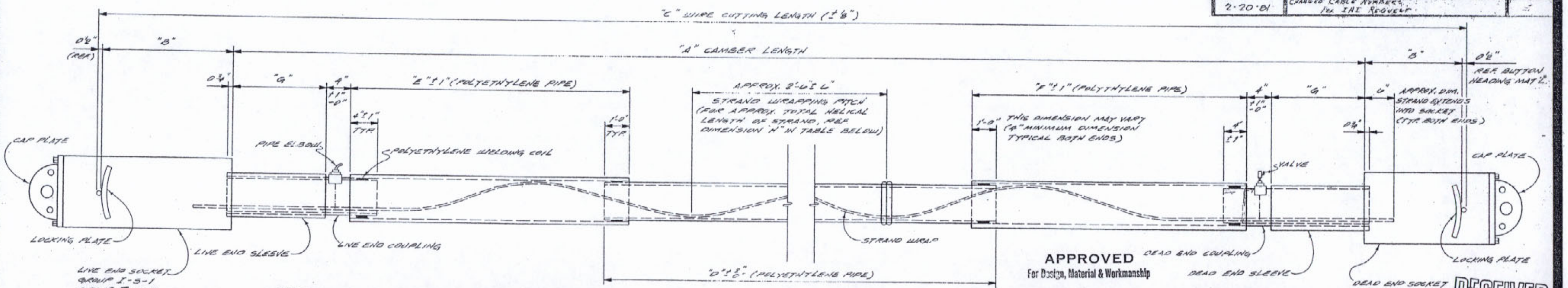

LINE END SOCKET
GROUP I-5-1
GROUP II-5-3
GROUP IV-5-5
GROUP V-5-7

* FABRICATION ALREADY BEGUN PER SCA-1 REV. 3

NOTES: 1) USE STENCIL WITH 1" HIGH NUMBERS TO PAINT SHIPPING MARK ON TOP OF BOTH LINE & DEAD END LIFTING CAPS, USE WHITE PAINT, LINE END WILL BE MARKED WITH "L.E." AND DEAD END WILL BE MARK WITH "D.E."
2.) WIRE CUTTING LENGTH: SEE COLUMN 10 FOR SETTING ON WIRE CUTTING LINE ⅜" IS ADDED TO THE CALCULATED LENGTH TO ASSURE MID-TOLERANCE LENGTH.

"D" = A-(G+E+4")-(G+F+4")+2'-0"

APPROVED
For Design, Material & Workmanship
Frankland & Lienhard
By E. S. 3-6-81

APPROVED
FOR SIZE OF MATERIAL AND STRENGTH OF CONNECTIONS
BRIDGE DESIGN SECTION
LOUIS A. GARRIDO BRIDGE DESIGN ENGINEER
By [signature] Date MAR 1 2 1981

DEAD END SOCKET
GROUP I-5-2
GROUP II-5-4
GROUP IV-5-6
GROUP V-5-8

RECEIVED FEB 25 1981
FEB 20 1981

FOR FINAL APPROVAL

29.91 157,936.54
29.91 157,947.83
29.92 157,973.24
16.45
11.14
5.47
16.98
34.16

GR.	CABLE NO.	1 A FEET	2 A FT.-IN.	3 B FT.-IN.	4 C FT.-IN.	5 D FT.-IN.	6 E FT.-IN.	7 F FT.-IN.	8 G FT.-IN.	9 H FT.-IN.	10 C' FT.-IN.	NUMBER WIRES	LOCKING PLATE	C.G. GROMMET	TOWER GROMMET	WELDING COIL
I	1	579.42	579-5	1-7¾	582-9½	550-6¼	10-0	18-0	1-3⅜	647-1¼	582-9⅞	271	LP-1	SS101-I	SS102	SIZE 1
I	2	579.46	579-5½	1-7¾	582-10	550-2¾	10-0	18-0	1-3⅜	647-1¼	582-10⅜	271	LP-1	SS101-I	SS102	SIZE 1
I	3	579.42	579-5	1-7¾	582-9½	550-2¼	10-0	18-0	1-3⅜	647-1¼	582-9⅞	271	LP-1	SS101-I	SS102	SIZE 1
I	4	579.46	579-5½	1-7¾	582-10	550-2¾	10-0	18-0	1-3⅜	647-1¼	582-10⅜	271	LP-1	SS101-I	SS102	SIZE 1
I	5	579.55	579-6⅝	1-7¾	582-11⅛	550-3⅜	10-0	18-0	1-3⅜	647-1¼	582-11½	271	LP-1	SS101-I	SS102	SIZE 1
I	6	579.59	579-7⅛	1-7¾	582-11⅝	550-4⅛	10-0	18-0	1-3⅜	647-1¼	583-0	271	LP-1	SS101-I	SS102	SIZE 1
I	7	579.55	579-6⅝	1-7¾	582-11⅛	550-3⅜	10-0	18-0	1-3⅜	647-1¼	582-11½	271	LP-1	SS101-I	SS102	SIZE 1
I	8	579.59	579-7⅛	1-7¾	582-11⅝	550-4⅛	10-0	18-0	1-3⅜	647-1¼	583-0	271	LP-1	SS101-I	SS102	SIZE 1
II	9	408.96	408-11¾	1-3 13/16	411-8⅞	380-0¼	10-0	18-0	1-1¾	447-11⅛	411-8¾	211	LP-3	SS101-II	SS102	SIZE 1
II	10	409.03	409-0⅜	1-3 13/16	411-9	380-0⅜	10-0	18-0	1-1¾	447-11⅛	411-9⅜	211	LP-3	SS101-II	SS102	SIZE 1
II	11	408.96	408-11¾	1-3 13/16	411-8⅞	380-0¼	10-0	18-0	1-1¾	447-11⅛	411-8¾	211	LP-3	SS101-II	SS102	SIZE 1
II	12	409.03	409-0⅜	1-3 13/16	411-9	380-0⅜	10-0	18-0	1-1¾	447-11⅛	411-9⅜	211	LP-3	SS101-II	SS102	SIZE 1
II	13	276.17	276-2	1-3 13/16	278-10⅝	247-2½	10-0	18-0	1-1¾	302-10¾	278-11	211	LP-3	SS101-II	SS102	SIZE 1
II	14	276.17	276-2	1-3 13/16	278-10⅝	247-2½	10-0	18-0	1-1¾	302-10¾	278-11	211	LP-3	SS101-II	SS102	SIZE 1
II	15	276.17	276-2	1-3 13/16	278-10⅝	247-2½	10-0	18-0	1-1¾	302-10¾	278-11	211	LP-3	SS101-II	SS102	SIZE 1
II	16	276.17	276-2	1-3 13/16	278-10⅝	247-2½	10-0	18-0	1-1¾	302-10⅝	278-11	211	LP-3	SS101-II	SS102	SIZE 1
IV	17	278.10	278-1¼	1-0⅝	280-3½	249-1¾	10-0	18-0	1-1¾	297-0⅜	280-3⅞	103	LP-2	SS101-IV	SS102	SIZE 4
IV	18	278.08	278-1	1-0⅝	280-3¼	249-1½	10-0	18-0	1-1¾	297-0⅜	280-3⅝	103	LP-2	SS101-IV	SS102	SIZE 4
IV	19	278.10	278-1¼	1-0⅝	280-3½	249-1¾	10-0	18-0	1-1¾	297-0⅜	280-3⅞	103	LP-2	SS101-IV	SS102	SIZE 4
IV	20	278.08	278-1	1-0⅝	280-3¼	249-1½	10-0	18-0	1-1¾	297-0⅜	280-3⅝	103	LP-2	SS101-IV	SS102	SIZE 4
IV	21	278.34	278-4⅛	1-0⅝	280-6⅛	249-4⅝	10-0	18-0	1-1¾	297-0⅜	280-6½	103	LP-2	SS101-IV	SS102	SIZE 4
IV	22	278.33	278-4	1-0⅝	280-6¼	249-4½	10-0	18-0	1-1¾	297-0⅜	280-6⅝	103	LP-2	SS101-IV	SS102	SIZE 4
IV	23	278.34	278-4⅛	1-0⅝	280-6⅜	249-4⅝	10-0	18-0	1-1¾	297-0⅜	280-6⅜	103	LP-2	SS101-IV	SS102	SIZE 4
IV	24	278.33	278-4	1-0⅝	280-6¼	249-4½	10-0	18-0	1-1¾	297-0⅜	280-6⅝	103	LP-2	SS101-IV	SS102	SIZE 4
II	25	420.77	420-9¼	1-3 13/16	423-5⅞	391-9¾	10-0	18-0	1-1¾	461-7¼	423-6¼	211	LP-3	SS101-II	SS102	SIZE 2
II	26	420.75	420-9	1-3 13/16	423-5⅝	391-9½	10-0	18-0	1-1¾	461-7¼	423-6	211	LP-3	SS101-II	SS102	SIZE 2
II	27	420.77	420-9¼	1-3 13/16	423-5⅞	391-9¾	10-0	18-0	1-1¾	461-7¼	423-6¼	211	LP-3	SS101-II	SS102	SIZE 2
II	28	420.75	420-9	1-3 13/16	423-5⅝	391-9½	10-0	18-0	1-1¾	461-7¼	423-6	211	LP-3	SS101-II	SS102	SIZE 2
II	29	420.94	420-11¼	1-3 13/16	423-7⅞	391-11¾	10-0	18-0	1-1¾	461-7¼	423-8¼	211	LP-3	SS101-II	SS102	SIZE 2
II	30	420.92	420-11	1-3 13/16	423-7⅝	391-11½	10-0	18-0	1-1¾	461-7¼	423-8	211	LP-3	SS101-II	SS102	SIZE 2
II	31	420.94	420-11¼	1-3 13/16	423-7⅞	391-11¾	10-0	18-0	1-1¾	461-7¼	423-8¼	211	LP-3	SS101-II	SS102	SIZE 2
II	32	420.92	420-11	1-3 13/16	423-7⅝	391-11½	10-0	18-0	1-1¾	461-7¼	423-8	211	LP-3	SS101-II	SS102	SIZE 2
V	33	584.14	584-1⅝	1-7¾	587-6⅛	554-10⅜	10-0	18-0	1-3⅜	678-9¾	587-6½	307	LP-4	SS101-V	SS102	SIZE 5
V	34	584.12	584-1½	1-7¾	587-6	554-10¼	10-0	18-0	1-3⅜	678-9¾	587-6⅜	307	LP-4	SS101-V	SS102	SIZE 5
V	35	584.14	584-1⅝	1-7¾	587-6⅛	554-10⅜	10-0	18-0	1-3⅜	678-9¾	587-6½	307	LP-4	SS101-V	SS102	SIZE 5
V	36	584.12	584-1½	1-7¾	587-6	554-10¼	10-0	18-0	1-3⅜	678-9¾	587-6⅜	307	LP-4	SS101-V	SS102	SIZE 5
V	37	583.92	583-11	1-7¾	587-3½	554-8¼	10-0	18-0	1-3⅜	678-9¾	587-3½	307	LP-4	SS101-V	SS102	SIZE 5
V	38	583.97	583-11⅝	1-7¾	587-4⅛	554-8⅞	10-0	18-0	1-3⅜	678-9¾	587-4½	307	LP-4	SS101-V	SS102	SIZE 5

GR.	CABLE NO.	1 A FEET	2 A FT.-IN.	3 B FT.-IN.	4 C FT.-IN.	5 D FT.-IN.	6 E FT.-IN.	7 F FT.-IN.	8 G FT.-IN.	9 H FT.-IN.	10 C' FT.-IN.	NUMBER WIRES	LOCKING PLATE	C.G. GROMMET	TOWER GROMMET	WELDING COIL
V	39	583.92	583-11	1-7¾	587-3½	554-8¼	10-0	18-0	1-3⅜	678-9¾	587-3⅞	307	LP-4	SS101-V	SS-102	SIZE 5
V	40	583.97	583-11⅝	1-7¾	587-4⅛	554-8⅞	10-0	18-0	1-3⅜	678-9¾	587-4½	307	LP-4	SS101-V	SS-102	SIZE 5
II	41	420.84	420-10⅛	1-3 13/16	423-6¾	391-10⅝	10-0	18-0	1-1¾	461-7¼	423-7⅛	211	LP-3	SS101-II	SS-102	SIZE 1
II	42	420.85	420-10¼	1-3 13/16	423-6⅞	391-10¾	10-0	18-0	1-1¾	461-7¼	423-7¼	211	LP-3	SS101-II	SS-102	SIZE 1
II	43	420.84	420-10⅛	1-3 13/16	423-6¾	391-10⅝	10-0	18-0	1-1¾	461-7¼	423-7⅛	211	LP-3	SS101-II	SS-102	SIZE 1
II	44	420.85	420-10¼	1-3 13/16	423-6⅞	391-10¾	10-0	18-0	1-1¾	461-7¼	423-7¼	211	LP-3	SS101-II	SS-102	SIZE 1
II	45	421.01	421-0⅛	1-3 13/16	423-8¾	392-0⅝	10-0	18-0	1-1¾	461-7¼	423-9⅛	211	LP-3	SS101-II	SS-102	SIZE 1
II	46	421.02	421-0¼	1-3 13/16	423-8⅞	392-0¾	10-0	18-0	1-1¾	461-7¼	423-9¼	211	LP-3	SS101-II	SS-102	SIZE 1
II	47	421.01	421-0⅛	1-3 13/16	423-8¾	392-0⅝	10-0	18-0	1-1¾	461-7¼	423-9⅛	211	LP-3	SS101-II	SS-102	SIZE 1
II	48	421.02	421-0¼	1-3 13/16	423-8⅞	392-0¾	10-0	18-0	1-1¾	461-7¼	423-9¼	211	LP-3	SS101-II	SS-102	SIZE 1
IV	49	278.13	278-1½	1-0⅝	280-3¾	249-2	10-0	18-0	1-1¾	297-0⅜	280-4⅛	103	LP-2	SS101-IV	SS-102	SIZE 4
IV	50	278.22	278-2⅝	1-0⅝	280-4⅞	249-3⅛	10-0	18-0	1-1¾	297-0⅜	280-5¼	103	LP-2	SS101-IV	SS-102	SIZE 4
IV	51	278.13	278-1½	1-0⅝	280-3¾	249-2	10-0	18-0	1-1¾	297-0⅜	280-4⅛	103	LP-2	SS101-IV	SS-102	SIZE 4
IV	52	278.22	278-2⅝	1-0⅝	280-4⅞	249-3⅛	10-0	18-0	1-1¾	297-0⅜	280-5¼	103	LP-2	SS101-IV	SS-102	SIZE 4
IV	53	278.37	278-4½	1-0⅝	280-6¾	249-5	10-0	18-0	1-1¾	297-0⅜	280-7⅛	103	LP-2	SS101-IV	SS-102	SIZE 4
IV	54	278.46	278-5½	1-0⅝	280-7¾	249-6	10-0	18-0	1-1¾	297-0⅜	280-8⅛	103	LP-2	SS101-IV	SS-102	SIZE 4
IV	55	278.37	278-4½	1-0⅝	280-6¾	249-5	10-0	18-0	1-1¾	297-0⅜	280-7⅛	103	LP-2	SS101-IV	SS-102	SIZE 4
IV	56	278.46	278-5½	1-0⅝	280-7¾	249-6	10-0	18-0	1-1¾	297-0⅜	280-8⅛	103	LP-2	SS101-IV	SS-102	SIZE 4
II	57	276.10	276-1¼	1-3 13/16	278-9⅞	247-1¾	10-0	18-0	1-1¾	302-10¾	278-10¼	211	LP-3	SS101-II	SS-102	SIZE 1
II	58	276.06	276-0¾	1-3 13/16	278-9⅜	247-1¼	10-0	18-0	1-1¾	302-10¾	278-9¾	211	LP-3	SS101-II	SS-102	SIZE 1
II	59	276.10	276-1¼	1-3 13/16	278-9⅞	247-1¾	10-0	18-0	1-1¾	302-10¾	278-10¼	211	LP-3	SS101-II	SS-102	SIZE 1
II	60	276.06	276-0¾	1-3 13/16	278-9⅜	247-1¼	10-0	18-0	1-1¾	302-10¾	278-9¾	211	LP-3	SS101-II	SS-102	SIZE 1
II	61	408.98	408-11¾	1-3 13/16	411-8⅜	380-0¼	10-0	18-0	1-1¾	447-11⅛	411-8¾	211	LP-3	SS101-II	SS-102	SIZE 1
II	62	408.92	408-11	1-3 13/16	411-7⅝	379-11½	10-0	18-0	1-1¾	447-11⅛	411-8	211	LP-3	SS101-II	SS-102	SIZE 1
II	63	408.98	408-11¾	1-3 13/16	411-8⅜	380-0¼	10-0	18-0	1-1¾	447-11⅛	411-8¾	211	LP-3	SS101-II	SS-102	SIZE 1
II	64	408.92	408-11	1-3 13/16	411-7⅝	379-11½	10-0	18-0	1-1¾	447-11⅛	411-8	211	LP-3	SS101-II	SS-102	SIZE 1
I	65	567.50	567-6	1-7¾	570-10½	538-3¼	10-0	18-0	1-3⅜	633-1⅝	570-10⅞	271	LP-1	SS101-I	SS-102	SIZE 1
I	66	567.47	567-5⅝	1-7¾	570-10⅛	538-2⅞	10-0	18-0	1-3⅜	633-1⅝	570-10½	271	LP-1	SS101-I	SS-102	SIZE 1
I	67	567.50	567-6	1-7¾	570-10½	538-3¼	10-0	18-0	1-3⅜	633-1⅝	570-10⅞	271	LP-1	SS101-I	SS-102	SIZE 1
I	68	567.47	567-5⅝	1-7¾	570-10⅛	538-2⅞	10-0	18-0	1-3⅜	633-1⅝	570-10½	271	LP-1	SS101-I	SS-102	SIZE 1
I	69	567.63	567-7½	1-7¾	571-0	538-4¾	10-0	18-0	1-3⅜	633-1⅝	571-0⅜	271	LP-1	SS101-I	SS-102	SIZE 1
I	70	567.60	567-7¼	1-7¾	570-11¾	538-4½	10-0	18-0	1-3⅜	633-1⅝	571-0⅛	271	LP-1	SS101-I	SS-102	SIZE 1
I	71	567.63	567-7½	1-7¾	571-0	538-4¾	10-0	18-0	1-3⅜	633-1⅝	571-0⅜	271	LP-1	SS101-I	SS-102	SIZE 1
I	72	567.60	567-7¼	1-7¾	570-11¾	538-4½	10-0	18-0	1-3⅜	633-1⅝	571-0⅛	271	LP-1	SS101-I	SS-102	SIZE 1

Contractor: WILLIAMS BROTHERS CONSTRUCTION CO., INC.
IMI INTERNATIONAL, INC.

Engineer: FRANKLAND AND LIENHARD - MODJESKI AND MASTERS

Project: MISSISSIPPI RIVER BRIDGE (LULING)
MAIN RIVER CROSSING SUPERSTRUCTURE
ST. CHARLES PARISH

PROJECT NUMBER | STATE

NOTICE: THIS DRAWING IS THE EXCLUSIVE PROPERTY OF THE PRESCON CORP AND THE INFORMATION SHOWN MAY NOT BE USED NOR THE DRAWING REPRODUCED WITHOUT WRITTEN PERMISSION OF THE PRESCON CORP.

Freyssinet
PRESCON

THE PRESCON CORPORATION
8918 TESORO DRIVE
SAN ANTONIO, TEXAS
78217

Tolerances: FRACTION ± ~ DECIMAL ± ~ ANGLE ± ~

MATERIAL SPECIFICATIONS: N/A
DRAWN BY: J. Sullivan
APPROVED BY: M. Pavelick

PART NAME: STAY CABLE ASSEMBLIES
DRAWING NUMBER: SCA-1

DATE	REVISION DESCRIPTION	REV. NO.

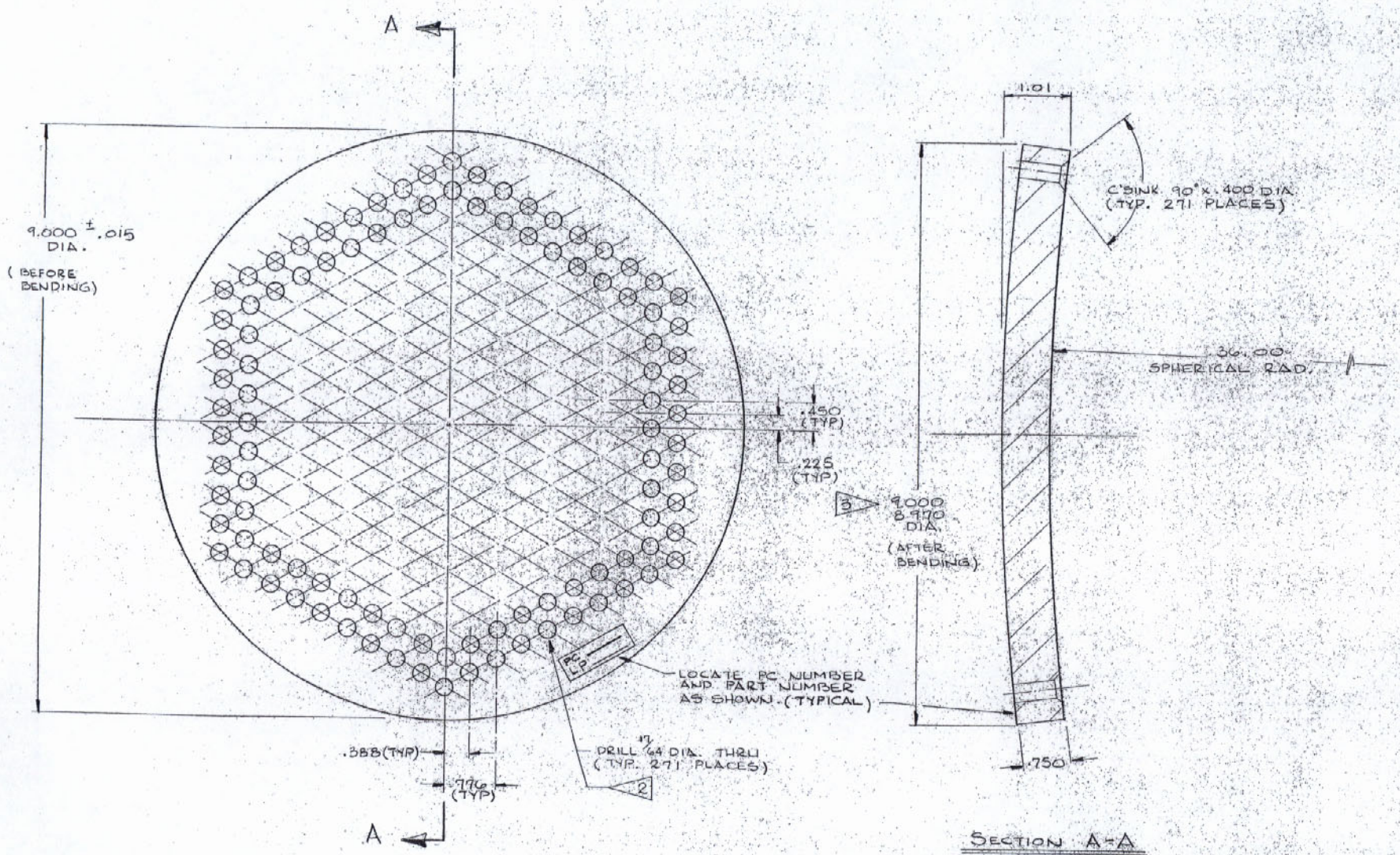

SECTION A-A

APPROVED
FOR SIZE OF MATERIAL AND STRENGTH OF CONNECTIONS
BRIDGE DESIGN SECTION
LOUIS A. CABRIDO BRIDGE DESIGN ENGINEER
By REB Date APR 21 1981

APPROVED
For Design, Material & Workmanship
Frankland & Lienhard
By I.V. 4-16-81

RECEIVED APR 13 1981

5. PLATE THICKNESS TO BE UNIFORM AND SURFACES PARALLEL 0.031 T.I.R. BEFORE FORMING.
4. LOCATION OF OUTER HOLES IN SECTION ARE AT MAXIMUM DISTANCE FROM CENTER LINE.
3. PART TO BE FORMED TO RADIUS AFTER DRILLING AND COUNTERSINK OPERATION.
2. HOLES TO BE DRILLED IN FLAT STOCK MATERIAL.
1. BREAK ALL SHARP EDGES.

NOTES:

APR 10 1981

ITEM No.	QTY. REQ'D	MATERIAL	MATERIAL SIZE	SPEC.	DESCRIPTION	DRAWING No.
1	1	STEEL PLATE	9 DIA. x .75 THICK	AISI 1040	LOCKING PLATE	

Tolerances UNLESS NOTED: FRACTION ± 1/16, .XXX ± .010, DECIMAL .XX ± .030, ANGLE ± .5°

MAT'L WGT. OF SIZE | FINISHED WGT. APPROX. 6.3# | MAX & MIN HARDNESS | HEAT TREAT | FINISH 125 | NEXT ASSEMBLY

Freyssinet PRESCON

THE PRESCON CORPORATION
8918 TESORO DRIVE
SAN ANTONIO, TEXAS
78217
a freyssinet international company

Disclosure Notice: This drawing is the exclusive property of The Prescon Corporation and the information shown may not be used nor the drawing reproduced without written permission of The Prescon Corporation

CONTRACTOR: WILLIAMS BROTHERS CONSTRUCTION CO., INC. IHI INTERNATIONAL, INC.

ENGINEER: FRANKLAND AND LIENHARD – MODJESKI AND MASTERS

PROJECT: MISSISSIPPI RIVER BRIDGE (LULING) MAIN RIVER CROSSING SUPERSTRUCTURE ST. CHARLES PARISH

PROJECT NUMBER: 450-37-02 FAP. I-310-4(35)223 | STATE: LOUISIANA

LOCKING PLATE
GROUP I - 271 WIRES

PBX 8001
HOHN
DATE 26 JULY 79
T. CASTELLANI
DATE 10/22/79

LP-1

DATE	REVISION DESCRIPTION	REV. NO.

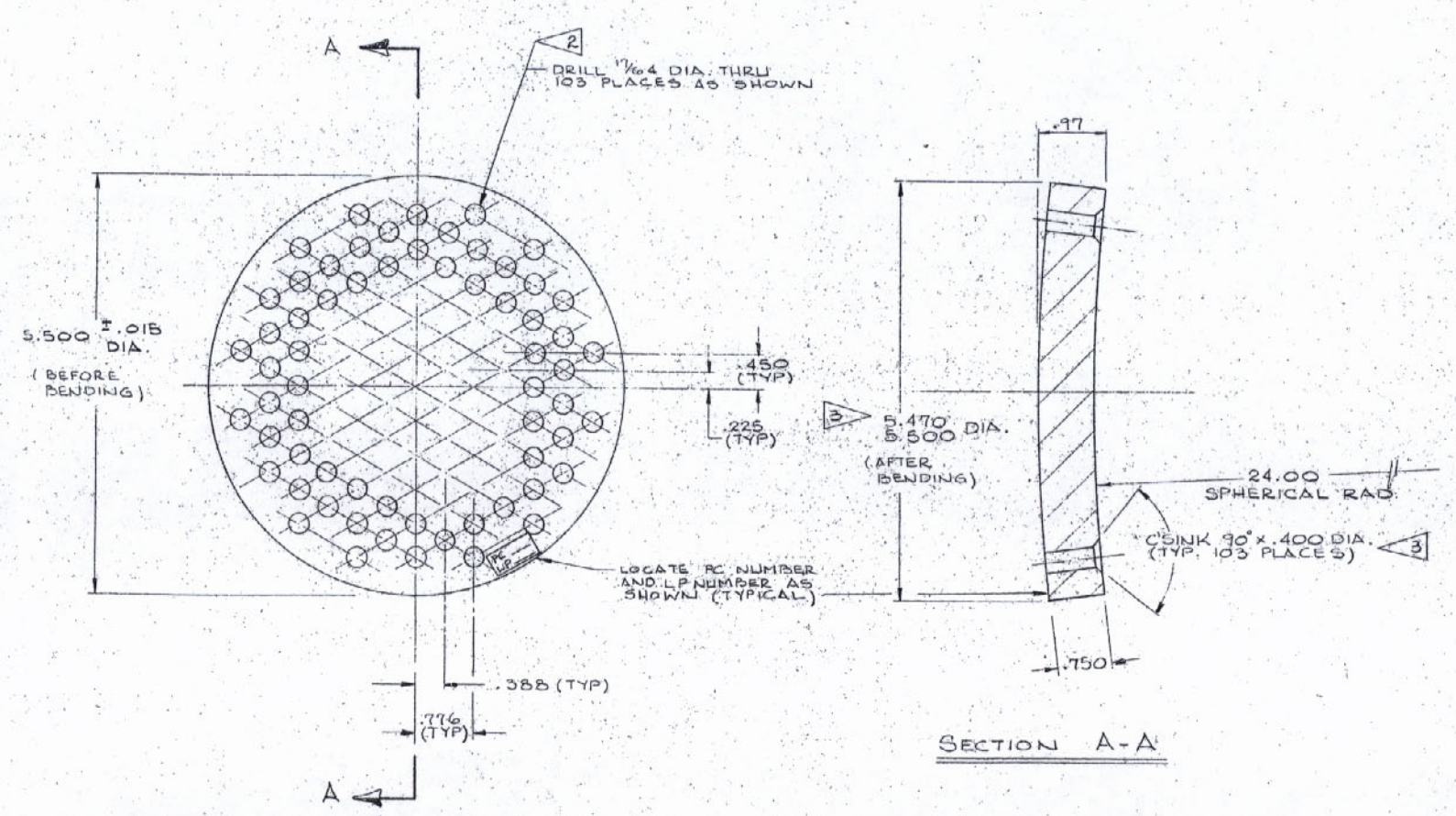

SECTION A-A

APPROVED
FOR SIZE OF MATERIAL AND STRENGTH OF CONNECTIONS
BRIDGE DESIGN SECTION
LOUISIANA BRIDGE DESIGN ENGINEER
By RFB Date APR 2 1 1981

APPROVED
For Design, Material & Workmanship
Frankland & Lienhard
By I.V. 4-16-81

RECEIVED APR 13 1981

APR 1 0 1981

5. PLATE THICKNESS TO BE UNIFORM AND SURFACES PARALLEL 0.031 T.I.R. BEFORE FORMING.
4. LOCATION OF OUTER HOLES IN SECTION ARE AT MAXIMUM DISTANCE FROM CENTER LINE.
3. PART TO BE FORMED TO RADIUS AFTER DRILLING AND COUNTERSINK OPERATION.
2. HOLES TO DRILLED IN FLAT STOCK MATERIAL.
1. BREAK ALL SHARP EDGES.

NOTES:

ITEM NO.	QTY. REQ'D	MATERIAL	MATERIAL SIZE	SPEC.	DESCRIPTION	DRAWING NO.
1	1	STEEL PLATE	5.500 DIA. X .75 THK	A151 1040	LOCKING PLATE	

Tolerances: UNLESS NOTED FRACTION ± 1/16, .XXX ± .010, DECIMAL ± .XX ± .030, ANGLE ± .5°

MAT'L WT. OF SIZE | FINISHED WT. APPROX 3.85# | MAX. & MIN. HARDNESS | HEAT TREAT | FINISH 125 | NEXT ASSEMBLY 655-61 .403

Freyssinet PRESCON

THE PRESCON CORPORATION
8918 TESORO DRIVE
SAN ANTONIO, TEXAS
78217
a freyssinet international company

Disclosure Notice: This drawing is the exclusive property of The Prescon Corporation and the information shown may not be used nor the drawing reproduced without written permission of The Prescon Corporation.

CONTRACTOR: WILLIAMS BROTHERS CONSTRUCTION CO., INC. IHI INTERNATIONAL, INC.

ENGINEER: FRANKLAND AND LIENHARD – MODJESKI AND MASTERS

PROJECT: MISSISSIPPI RIVER BRIDGE (LULING) MAIN RIVER CROSSING SUPERSTRUCTURE ST. CHARLES PARISH

PROJECT NUMBER: 450-37-02 FAP 1-310-4(85)223 | STATE: LOUISIANA

LOCKING PLATE
GROUP IV - 103 WIRE

PBA-BOD
DRAWN BY K. HOHN
DATE 21 JUNE 79
CHECKED BY TAC
DATE 8/13/79

LP-2

DATE	REVISION DESCRIPTION	REV NO.

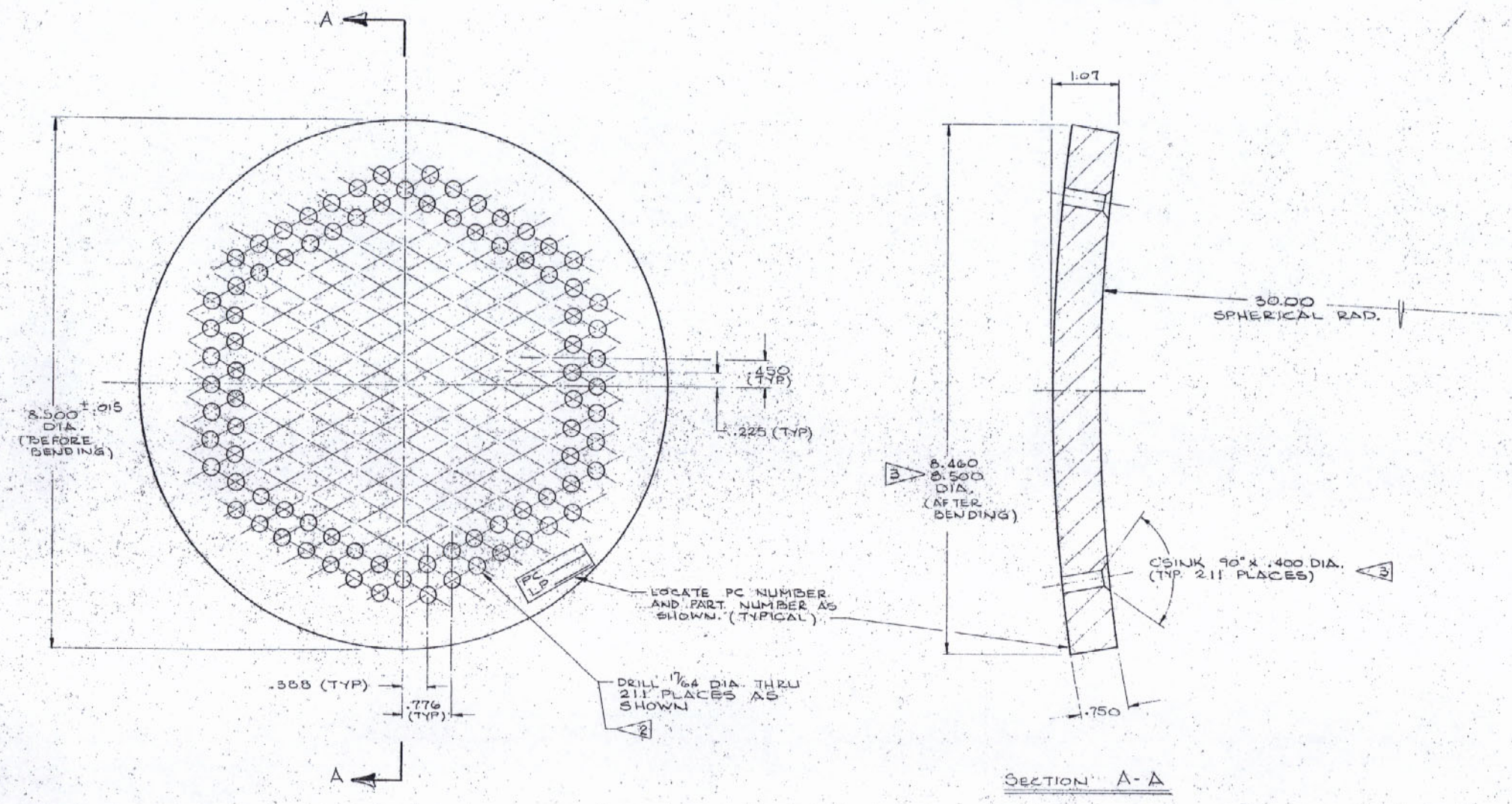

APPROVED
FOR SIZE OF MATERIAL AND STRENGTH OF CONNECTIONS
BRIDGE DESIGN SECTION
LOUISIANA DEPARTMENT OF HIGHWAYS
By REB BRIDGE DESIGN ENGINEER
Date APR 21 1981

APPROVED
For Design, Material & Workmanship
Frankland & Lienhard
By I.V. 4-16-81

RECEIVED
APR 13 1981

APR 10 1981

4. PLATE THICKNESS TO BE UNIFORM AND SURFACES PARALLEL .0.031 T.I.R. BEFORE DRILLING.

3 PART TO BE FORMED TO RADIUS AFTER DRILLING AND COUNTERSINK OPERATION.

2 HOLES TO BE DRILLED IN FLAT STOCK MATERIAL.

1. BREAK ALL SHARP EDGES.

NOTES:

1	1	STEEL PLATE	8.5 O.D. x .750 THICK	A131 D40	LOCKING PLATE
MATERIAL					

Tolerances UNLESS NOTED
FRACTION ± 1/16
.XXX ± .010
DECIMAL .XX ± .030
ANGLE ± .5°

MAT'L WGT. SIZE | FINISHED WGT. APPROX. | MAX & MIN HARDNESS
HEAT TREAT | FINISH 125 | HEAT ASSEMBLY 455-61 415 & 416

freyssinet PRESCON

THE PRESCON CORPORATION
8918 TESORO DRIVE
SAN ANTONIO, TEXAS
78217
a freyssinet international company

Disclosure Notice
This drawing is the exclusive property of The Prescon Corporation and the information shown may not be used nor the drawing reproduced without written permission of The Prescon Corporation.

CONTRACTOR
WILLIAMS BROTHERS CONSTRUCTION CO., INC.
IHI INTERNATIONAL, INC.

ENGINEER
FRANKLAND AND LIENHARD - MODJESKI AND MASTERS

PROJECT
MISSISSIPPI RIVER BRIDGE (LULING)
MAIN RIVER CROSSING SUPERSTRUCTURE
ST. CHARLES PARISH

PROJECT NUMBER	STATE
450-37-02 FAP. I-310-4(35)225	LOUISIANA

LOCKING PLATE
GROUP II - 211 WIRE

DRAWN BY K. Hahn
DATE 22 JUNE '79
CHECKED BY M.W. HOBLEY
DATE 11/12/79 THIS

LP-3

DATE	REVISION DESCRIPTION	REV NO

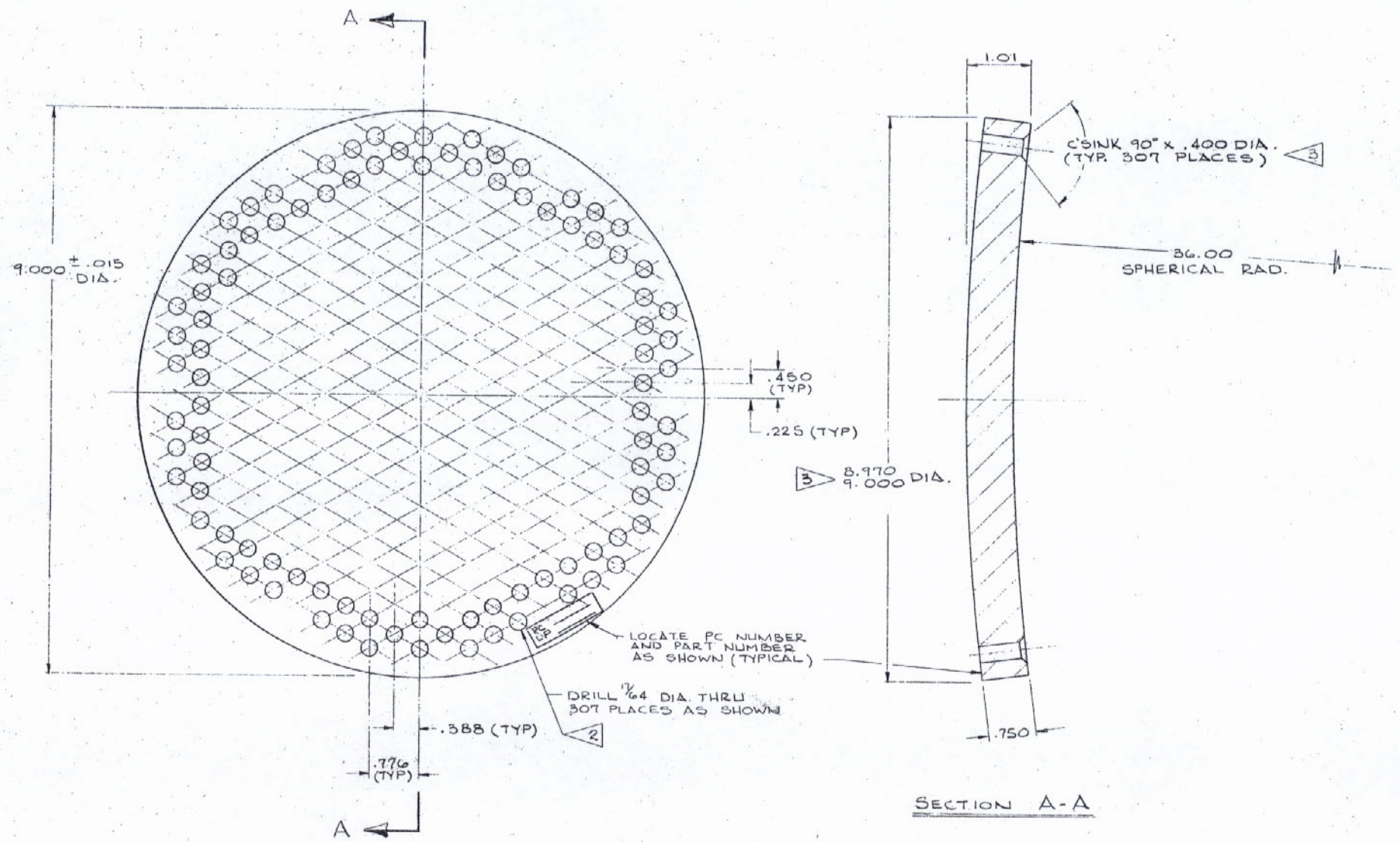

SECTION A-A

APPROVED
FOR SIZE OF MATERIAL AND STRENGTH OF CONNECTIONS
BRIDGE DESIGN SECTION
LOUIS A. CARRIDO BRIDGE DESIGN ENGINEER
By RFB Date APR 2 1 1981

5. PLATE THICKNESS TO BE UNIFORM AND SURFACES PARALLEL 0.031 T.I.R. BEFORE FORMING.

4. LOCATION OF OUTER HOLES IN SECTION ARE AT MAXIMUM DISTANCE FROM CENTER LINE.

3 PART TO BE FORMED TO RADIUS AFTER DRILLING AND COUNTERSINK OPERATION.

2 HOLES TO BE DRILLED IN FLAT STOCK MATERIAL.

1. BREAK ALL SHARP EDGES.

NOTES:

APPROVED
For Design, Material & Workmanship
Frankland & Lienhard
By I.V. 4-16-81

RECEIVED APR 13 1981

APR 10 1981

ITEM No.	QTY. REQ'D.	MATERIAL	MATERIAL SIZE	SPEC	DESCRIPTION	DRAWING No.
1	1	STEEL PLATE	9 OD. x .75 THICK	AISI 1040	LOCKING PLATE	

Tolerances UNLESS NOTED
FRACTION ± 1/16
.XXX ± .010
ORIGINAL ± .030
ANGLE ± .5°

MAT'L WT. OF SIZE | FINISHED WT. APPROX. 5.3# | MAX. & MIN. HARDNESS
HEAT TREAT | FINISH 125 | NEXT ASSEMBLY

Freyssinet PRESCON
THE PRESCON CORPORATION
8918 TESORO DRIVE
SAN ANTONIO, TEXAS
78217
a freyssinet international company

Disclosure Notice
This drawing is the exclusive property of The Prescon Corporation and the information shown may not be used nor the drawing reproduced without written permission of The Prescon Corporation

CONTRACTOR
WILLIAMS BROTHERS CONSTRUCTION CO., INC.
IHI INTERNATIONAL, INC.

ENGINEER
FRANKLAND AND LIENHARD – MODJESKI AND MASTERS

PROJECT
MISSISSIPPI RIVER BRIDGE (LULING)
MAIN RIVER CROSSING SUPERSTRUCTURE
ST. CHARLES PARISH

PROJECT NUMBER	STATE
450-37-02 FAP 1-310-4(35)223	LOUISIANA

LOCKING PLATE
GROUP V - 307 WIRES

PBX 8001
K. HÖHN
21 JUNE 79
M.W. HOBLET
11/12/79

LP-4

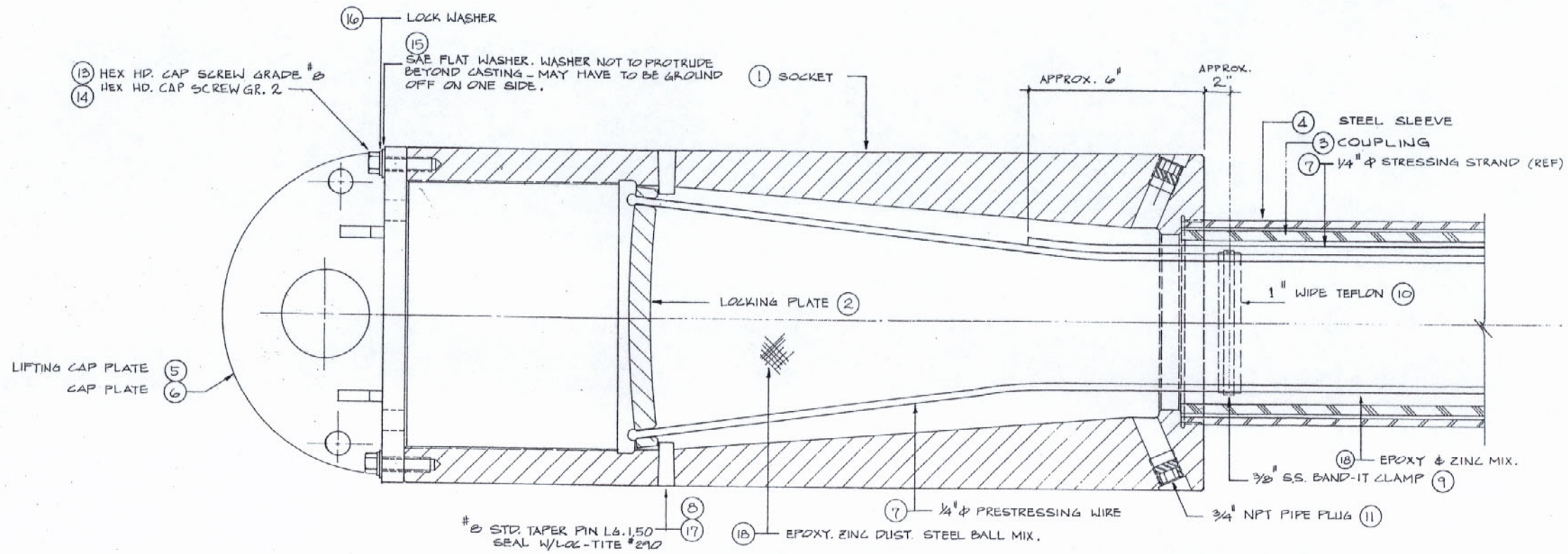

APPROVED
For Design, Material & Workmanship
Frankland & Lienhard
By I.V. 4-21-81

RECEIVED APR 7 1981

MAR 30 1981

ANCHOR ASSEMBLY SOCKET I LIVE END
SCALE: 1" = 2"

NOTES:

1. STOP PIN & POUR HOLE NOT SHOWN IN TRUE SECTION.
2. THIS CONFIGURATION FOR LIVE END ONLY.
3. ALL BUTTON HEAD DIAMETERS TO BE 0.360 TO 0.390 ECCENTRICITY OF BUTTON HD. ± .010 MAX.
4. ALL BUTTON HEADING MUST BE DONE ON A PREQUALIFIED BUTTON HEADING MACHINE.
5. CAUTION: DURING ASSEMBLY, LOCKING PLATES MUST BE ALIGNED TO PROVIDE PARALLEL WIRE IN BUNDLE.
6. BEFORE SECURING PRESSURE PLATE ALL TWIST MUST BE TAKEN OUT OF WIRES.
7. USE RTV 102 TO SEAL STEEL SLEEVE INTO CASTING PRIOR TO PRE-HEAT.
8. AFTER FINAL CURE, REMOVE PRESSURE PLATE & RUBBER SEAL PLATE. BRUSH VISCONORUST 1601 AMBER RUST PREVENTIVE ON BUTTON HEADS, LOCKING PLATE AND CASTING SEAL SURFACE. INSTALL LIFTING CAP PLATE FOR SHIPMENT USING 1/2-13 UNC GR.8 BOLTS (ITEM 13).
9. REF. DETAIL PART DRAWINGS FOR PAINTING CALLOUTS-PER SPECIAL PROVISIONS.
10. LIFTING CAP PL (ITEM 5) AND 1/2-13 UNC GR.8 BOLTS (ITEM 13) SHOWN ARE FOR ERECTION ONLY AND ARE TO BE REPLACED WITH CAP PL (ITEM 6) AND 1/2-13 UNC GR.2 BOLTS (ITEM 14) FOLLOWING ERECTION. LIFTING CAP PL AND 1/2-13 UNC GR.8 BOLTS ARE TO BE RETURNED TO PRESCON FOR REUSE.

APPROVED
FOR SIZE OF MATERIAL AND STRENGTH OF STRUCTURAL PARTS
BRIDGE DESIGN SECTION
LOUIS A. GARRIDO BRIDGE DESIGN ENGINEER
By RFB Date MAY 6 1981

ITEM NO.	QTY. REQ'D.	MATERIAL	MATERIAL SIZE	SPEC.	DESCRIPTION	DRAWING No.
18	A/R	—	—	—	EPOXY MIX	
17	A/R	—	#290	—	LOC-TITE	
16	6	STEEL	3/8 O.D. x 1/8 THICK	—	LOCK WASHER	
15	6	STEEL	1 9/16 O.D. x 5/32 THICK	SAE	FLAT WASHER	
14	6	STEEL	1/2-13 UNC x 1 1/4 LG.	GR. 2	BOLT, HEX. HD. CAP	
13	6	STEEL	1/2-13 UNC x 1 1/4 LG.	GR. 8	BOLT, HEX. HD. CAP	
12	A/R	—	—	—	RTV 102 SEALANT	
11	3	STEEL	3/4 NPT	—	HEX. SOCKET PIPE PLUG	
10	1	TEFLON	1 WIDE x 1/32 THICK x 16'-0" LG.	—	TEFLON	
9	1	SS	3/8 WIDE x 20 3/8 LG.	—	BAND-IT CLAMP	
8	3	STEEL	#8 STD. x 1.50 LG.	—	TAPER PIN	
7	271	STEEL	0.25 DIA. x 240 G.U.T.S.	A-421 TYPE-BA	PRESTRESSING WIRE	-
6	1	—	—	—	CAP PLATE (NOT SHOWN)	CP-1
5	1	—	—	—	LIFTING CAP PLATE	LCP-1
4	1	—	—	—	SLEEVE	SA-1
3	1	—	—	—	COUPLING	C-1
2	1	—	—	—	LOCKING PLATE	LP-1
1	1	—	—	—	SOCKET	S-1

NO	DATE	REVISION	BY
1	12-17-79	MINOR CORRECTION	KHW

THE PRESCON CORPORATION
8918 TESORO DRIVE
SAN ANTONIO, TEXAS 78217
(512) 828-6264

Disclosure Notice
This drawing is the exclusive property of The Prescon Corporation and the information shown may not be used nor the drawing reproduced without written permission of The Prescon Corporation.

CONTRACTOR
WILLIAMS BROTHERS CONSTRUCTION CO., INC.
IHI INTERNATIONAL, INC.

ENGINEER
FRANKLAND AND LIENHARD - MODJESKI AND MASTERS

PROJECT
MISSISSIPPI RIVER BRIDGE (LULING)
MAIN RIVER CROSSING SUPERSTRUCTURE
ST. CHARLES PARISH

PROJECT NUMBER	STATE
450-37-02 FAP. I-310-4(35)223	LOUISIANA

ANCHOR ASSEMBLY
SOCKET I LIVE END

PBX 8001
DRAWN BY: M. TELLEZ
DATE 10-4-78
APPROVED BY: T. CASTELLAN
DATE 10/23/79

AA-1

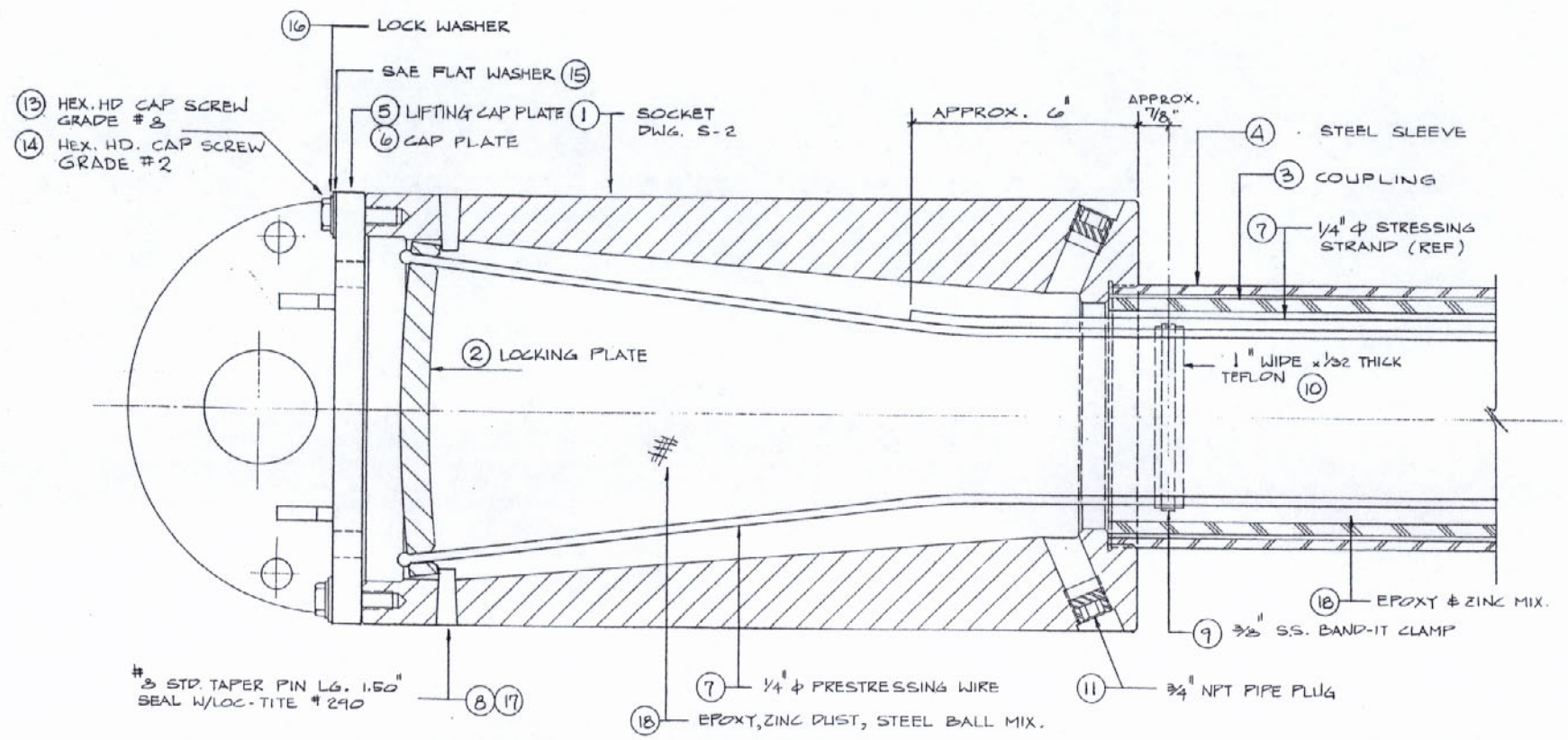

ANCHOR ASSEMBLY SOCKET I DEAD END

SCALE: 1" = 2"

APPROVED
For Design, Material & Workmanship
Frankland & Lienhard
By I.V. 4-21-81

RECEIVED
MAR 30 1981
APR 7 1981
BOSTON

NOTES:

1. STOP PIN & POUR HOLE NOT SHOWN IN TRUE SECTION.
2. THIS CONFIGURATION FOR DEAD END ONLY.
3. ALL BUTTON HEAD DIAMETERS TO BE 0.360 TO 0.390 ELLENTRICITY OF BUTTON HD. ± 0.010 MAX.
4. ALL BUTTON HEADING MUST BE DONE ON A PREQUALIFIED BUTTON HEADING MACHINE.
5. CAUTION: DURING ASSEMBLY, LOCKING PLATES MUST BE ALIGNED TO PROVIDE PARALLEL WIRE IN BUNDLE.
6. BEFORE SECURING PRESSURE PLATE ALL TWIST MUST BE TAKEN OUT OF WIRES.
7. USE RTV 102 TO SEAL STEEL SLEEVE INTO CASTING PRIOR TO PRE-HEAT.
8. AFTER FINAL CURE REMOVE PRESSURE PLATE & RUBBER SEAL PLATE. BRUSH VISCONORUST 1601 AMBER RUST PREVENTIVE ON BUTTON HEADS, LOCKING PLATE AND SOCKET SEAL SURFACE. INSTALL LIFTING CAP PLATE FOR SHIPMENT. USING 1/2-13 UNC GR. 8 BOLTS (ITEM 13)
9. REF. DETAIL PART DRAWINGS FOR PAINTING CALLOUTS - PER SPECIAL PROVISIONS.

10 LIFTING CAP PL (ITEM 5) AND 1/2-13 UNC GR. 8 BOLTS (ITEM 13) SHOWN ARE FOR ERECTION ONLY AND ARE TO BE REPLACED WITH CAP PL (ITEM 6) AND 1/2-13 UNC GR. 2 BOLTS (ITEM 14) FOLLOWING ERECTION. LIFTING CAP PL AND 1/2-13 UNC GR. 8 BOLTS ARE TO BE RETURNED TO PRESCON FOR REUSE.

APPROVED
FOR SIZE OF MATERIAL AND STRENGTH OF CONNECTIONS
BRIDGE DESIGN SECTION
LOUIS A. GARRUTO BRIDGE DESIGN ENGINEER
By REB Date MAY 6 1981

ITEM NO.	QTY. REQ'D	MATERIAL	MATERIAL SIZE	SPEC.	DESCRIPTION	DRAWING No.
18	A/R	—	—	—	EPOXY MIX	
17	A/R		#290		LOC-TITE	
16	6	STEEL	7/8 O.D. x 1/8 THICK	—	LOCK WASHER	
15	6	STEEL	1 1/16 O.D. x 5/32 THICK	SAE	FLAT WASHER	
14	6	STEEL	1/2-13 UNC x 1 1/4 LG.	GR. 2	BOLT, HEX. HD. CAP	
13	6	STEEL	1/2-13 UNC x 1 1/4 LG.	GR. 8	BOLT, HEX. HD. CAP	
12	A/R	—	—	—	RTV 102 SEALANT	
11	3	STEEL	3/4 NPT		HEX. SOCKET PIPE PLUG	
10	1		1 WIDE x 1/32 THICK x 162 LG.	—	TEFLON	
9	1	S.S.	3/8 WIDE x 20 3/8 LG.	—	BAND-IT CLAMP	
8	3	STEEL	#8 STD. x 1.50 LG.	—	TAPER PIN	
7	271	STEEL	0.25 DIA x 240 G.U.T.S.	A-421 TYPE-BA	PRESTRESSING WIRE	
6	1	—	—	—	CAP PLATE (NOT SHOWN)	CP-1
5	1	—	—	—	LIFTING CAP PLATE	LCP-1
4	1	—	—	—	SLEEVE	SA-1
3	1	—	—	—	COUPLING	C-1
2	1	—	—	—	LOCKING PLATE	LP-1
1	1	—	—	—	SOCKET	S-2

NO	DATE	REVISION	BY
1	12-17-79	MINOR CORRECTION	KH/MM

THE PRESCON CORPORATION
8918 TESORO DRIVE
SAN ANTONIO, TEXAS 78217
(512) 828-6264

Disclosure Notice
This drawing is the exclusive property of The Prescon Corporation and the information shown may not be used nor the drawing reproduced without written permission of The Prescon Corporation.

CONTRACTOR
WILLIAMS BROTHERS CONSTRUCTION CO., INC.
IHI INTERNATIONAL, INC.

ENGINEER
FRANKLAND AND LIENHARD – MODJESKI AND MASTERS

PROJECT
MISSISSIPPI RIVER BRIDGE (LULING)
MAIN RIVER CROSSING SUPERSTRUCTURE
ST. CHARLES PARISH

PROJECT NUMBER	STATE
450-37-02 FAP. I-310-4(35)223	LOUISIANA

ANCHOR ASSEMBLY
SOCKET I DEAD END

PBX 8001
DR. M. TELLEZ
DATE 10-5-78
CK. T. CASTELLAN
10/23/79

AA-2

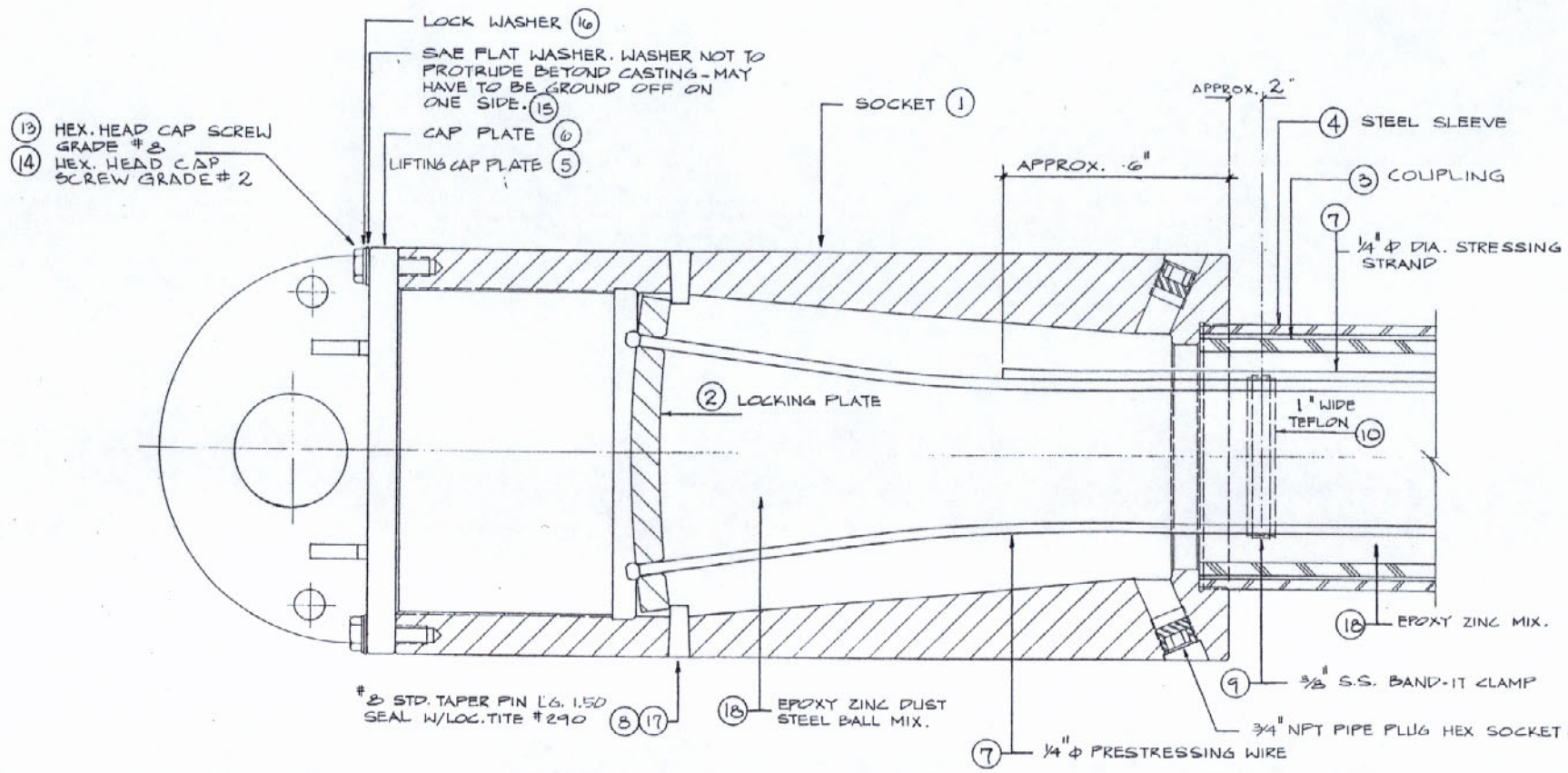

ANCHOR ASSEMBLY SOCKET II LIVE END

SCALE: 1" = 2"

APPROVED
For Design, Material & Workmanship
Frankland & Lienhard
By I.V. 4-21-81

RECEIVED
APR 7 1981
SOENV

MAR 30 1981

NOTES:

1. STOP PIN & POUR HOLE NOT SHOWN IN TRUE SECTION.
2. THIS CONFIGURATION FOR LIVE END ONLY.
3. ALL BUTTON HEAD DIAMETERS TO BE 0.360 TO 0.390 ECCENTRICITY OF BUTTON HD. ±0.010 MAX.
4. ALL BUTTON HEADING MUST BE DONE ON A PREQUALIFIED BUTTON HEADING MACHINE.
5. CAUTION: DURING ASSEMBLY, LOCKING PLATES MUST BE ALIGNED TO PROVIDE PARALLEL WIRE IN BUNDLE.
6. BEFORE SECURING PRESSURE PLATE ALL TWIST MUST BE TAKEN OUT OF WIRES.
7. USE RTV 102 TO SEAL STEEL SLEEVE INTO CASTING PRIOR TO PRE-HEAT.
8. AFTER FINAL CURE, REMOVE PRESSURE PLATE & RUBBER SEAL PLATE. BRUSH VISCONORUST 1601 AMBER RUST PREVENTIVE ON BUTTON HEADS, LOCKING PLATES AND ACME THREADS. INSTALL LIFTING CAP PLATE FOR SHIPMENT USING 1/2-13 UNC GR. 8 BOLTS (ITEM 13).
9. REF. DETAIL PART DRAWINGS FOR PAINTING CALLOUTS - PER SPECIAL PROVISIONS.
10. LIFTING CAP PL (ITEM 6) AND 1/2-13 UNC GR8 BOLTS (ITEM 13) SHOWN ARE FOR ERECTION ONLY AND ARE TO BE REPLACED WITH CAP PL (ITEM 6) AND 1/2-13 UNC GR. 2 BOLTS (ITEM 14) FOLLOWING ERECTION. LIFTING CAP PL AND 1/2-13 UNC GR. 8 BOLTS ARE TO BE RETURNED TO PRESCON FOR REUSE.

APPROVED
FOR SIZE OF MATERIAL AND STRENGTH
RFB Date MAY 6 1981

ITEM No	QTY. REQ'D.	MATERIAL	MATERIAL SIZE	SPEC.	DESCRIPTION	DRAWING No
18	A/R	—	—	—	EPOXY MIX	
17	A/R	—	#290	—	LOC-TITE	
16	6	STEEL	7/8 O.D. X 1/8 THICK	—	LOCK WASHER	
15	6	STEEL	1 1/16 O.D. X 3/32 THICK	SAE.	FLAT WASHER	
14	6	STEEL	1/2-13 UNC X 1 1/4 LG.	GR. 2	BOLT, HEX. HD. CAP	
13	6	STEEL	1/2-13 UNC X 1 1/4 LG.	GR. 8	BOLT, HEX. HD. CAP	
12	A/R	—	—	—	RTV 102 SEALANT	
11	3	STEEL	3/4 NPT	—	HEX SOCKET PIPE PLUG	
10	1	—	1 WIDE X 1/32 THICK X 16 1/2 LG.	—	TEFLON	
9	1	S.S.	3/8 WIDE X 20 7/8 LG.	—	BAND-IT CLAMP	
8	3	STEEL	#8 STD. X 1.50 LG.	—	TAPER PIN	
7	211	STEEL	0.25 DIA. X 240 S.U.T.S.	A-421 TYPE-BA	PRESTRESSING WIRE	
6	1	—	—	—	CAP PLATE (NOT SHOWN)	CP-3
5	1	—	—	—	LIFTING CAP PLATE	LCP-3
4	1	—	—	—	SLEEVE	SA-1
3	1	—	—	—	COUPLING	C-1
2	1	—	—	—	LOCKING PLATE	LP-3
1	1	—	—	—	SOCKET	S-3

NO	DATE	REVISION

THE PRESCON CORPORATION
8918 TESORO DRIVE
SAN ANTONIO, TEXAS 78217
(512) 828-6264

Disclosure Notice
This drawing is the exclusive property of The Prescon Corporation and the information shown may not be used nor the drawing reproduced without written permission of The Prescon Corporation.

CONTRACTOR
WILLIAMS BROTHERS CONSTRUCTION CO., INC.
IHI INTERNATIONAL, INC.

ENGINEER
FRANKLAND AND LIENHARD - MODJESKI AND MASTERS

PROJECT
MISSISSIPPI RIVER BRIDGE (LULING)
MAIN RIVER CROSSING SUPERSTRUCTURE
ST. CHARLES PARISH

PROJECT NUMBER	STATE
450-37-02 FAP I-310-4(351)223	LOUISIANA

ANCHOR ASSEMBLY
SOCKET II LIVE END

PBX 8001
M. TELLEZ 10-6-78
M. W. HOBLER 12-17-79

AA-3

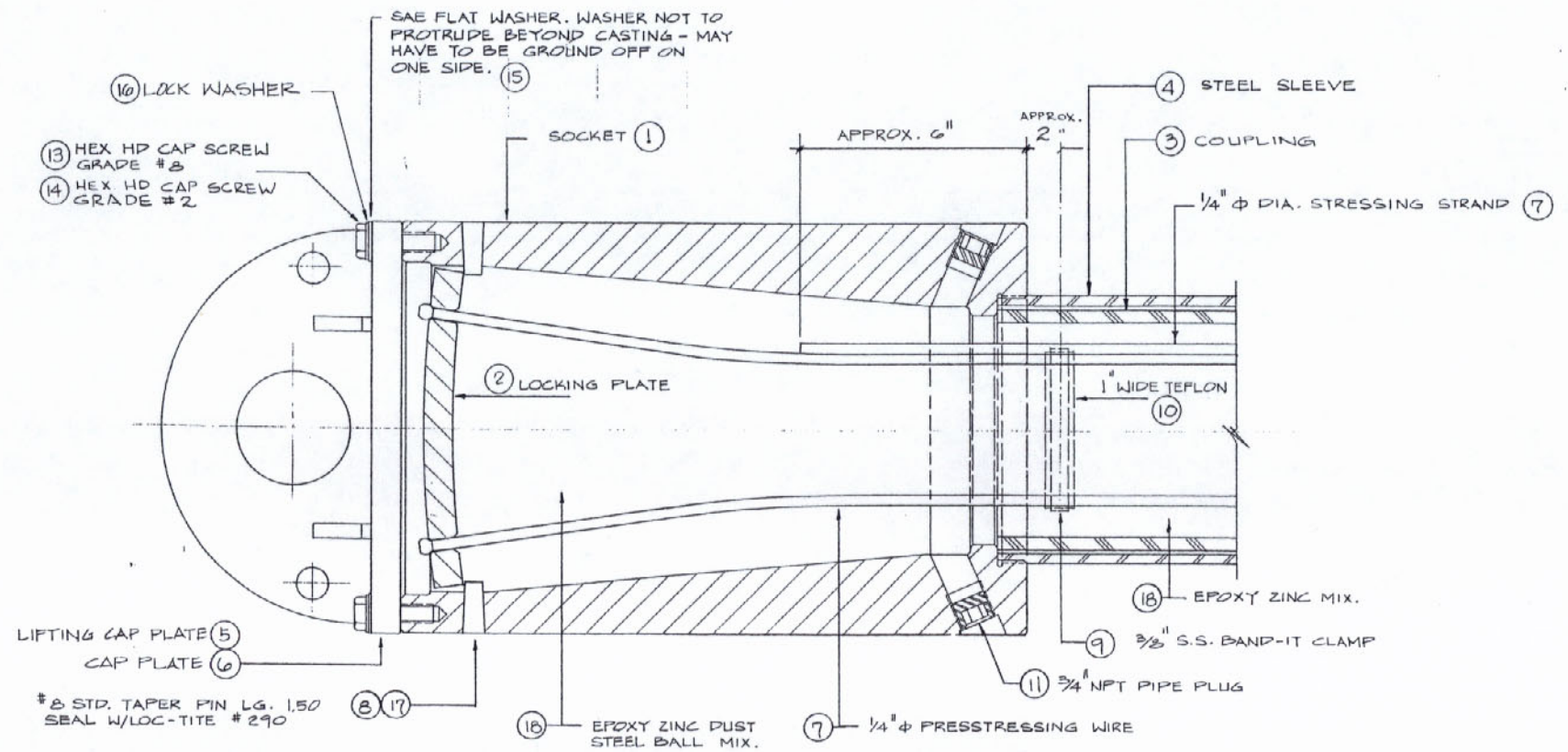

ANCHOR ASSEMBLY SOCKET II DEAD END

SCALE : 1" = 2"

APPROVED
For Design, Material & Workmanship

Frankland & Lienhard
By I.V. 4-21-81

RECEIVED APR 7 1981

MAR 30 1981

ITEM No	QTY. REQ'D.	MATERIAL	MATERIAL SIZE	SPEC.	DESCRIPTION	DRAWING No
18	A/R	—	—	—	EPOXY MIX	
17	A/R	—	#290	—	LOC-TITE	
16	6	STEEL	7/8 O.D. x 1/8 THICK	—	LOCK WASHER	
15	6	STEEL	1 1/16 O.D. x 5/32 THICK	SAE	FLAT WASHER	
14	6	STEEL	1/2-13 UNC x 1 1/4 LG.	GR. 2	BOLT, HEX. HD. CAP	
13	6	STEEL	1/2-13 UNC x 1 1/4 LG.	GR. 8	BOLT, HEX. HD. CAP	
12	A/R	—	—	—	RTV 102 SEALANT	
11	3	STEEL	3/4 NPT	—	HEX. SOCKET PIPE PLUG	
10	1		1 WIDE x 1/32 THICK x 16 1/2 LG.		TEFLON	
9	1	SS	3/8 WIDE x 20 3/8 LG.	—	BAND-IT CLAMP	
8	3	STEEL	#8 STD. x 1.50 LG.	—	TAPER PIN	
7	211	STEEL	0.25 DIA. x 240 G.U.T.S.	A-421 TYPE-BA	PRESTRESSING WIRE	
6	1	—	—	—	CAP PLATE (NOT SHOWN)	CP-5
5	1	—	—	—	LIFTING CAP PLATE	LCP-3
4	1	—	—	—	SLEEVE	SA-1
3	1	—	—	—	COUPLING	C-1
2	1	—	—	—	LOCKING PLATE	LP-3
1	1	—	—	—	SOCKET	S-4

NOTES:

1. STOP PIN & POUR HOLE NOT SHOWN IN TRUE SECTION.
2. THIS CONFIGURATION FOR DEAD END ONLY.
3. ALL BUTTON HEAD DIAMETERS TO BE 0.360 TO 0.390 DIAMETERS ECCENTRICITY OF BUTTON HD. ± 0.010 MAX.
4. ALL BUTTON HEADING MUST BE DONE ON A PREQUALIFIED BUTTON HEADING MACHINE.
5. CAUTION: DURING ASSEMBLY, LOCKING PLATES MUST BE ALIGNED TO PROVIDE PARALLEL WIRE BUNDLE.
6. BEFORE SECURING PRESSURE PLATE ALL TWIST MUST BE TAKEN OUT OF WIRES.
7. USE RTV 102 TO SEAL STEEL SLEEVE IN TO SOCKET PRIOR TO PRE-HEAT
8. AFTER FINAL CURE, REMOVE PRESSURE PLATE & RUBBER SEAL PLATE. BRUSH VISCONORUST 1601 AMBER RUST PREVENTIVE ON BUTTON HEADS, LOCKING PLATE AND SOCKET SEAL SURFACE. INSTALL LIFTING CAP PLATE FOR SHIPMENT USING 1/2-13 UNC GR. 8 BOLTS (ITEM 13)
9. REF. DETAIL PART DRAWINGS FOR PAINTING CALLOUTS - PER SPECIAL PROVISIONS.
10. LIFTING CAP PL (ITEM 5) AND 1/2-13 UNC GR. 8 BOLTS (ITEM 13) SHOWN ARE FOR ERECTION ONLY AND ARE TO BE REPLACED WITH CAP PL (ITEM 6) AND 1/2-13 UNC GR. 2 BOLTS (ITEM 14) FOLLOWING ERECTION. LIFTING CAP PL AND 1/2-13 UNC GR. 8 BOLTS ARE TO BE RETURNED TO PRESCON FOR REUSE.

APPROVED
FOR SIZE OF MATERIAL AND STRENGTH OF CONNECTIONS
BRIDGE DESIGN SECTION
LOUIS A. GARRIDO BRIDGE DESIGN ENGINEER
By RFB Date MAY 6 1981

NO	DATE	REVISION	BY

THE PRESCON CORPORATION
3918 TESORO DRIVE
SAN ANTONIO, TEXAS 78217
(512) 828-6264

Disclosure Notice
This drawing is the exclusive property of The Prescon Corporation and the information shown may not be used nor the drawing reproduced without written permission of The Prescon Corporation.

CONTRACTOR
WILLIAMS BROTHERS CONSTRUCTION CO., INC.
IHI INTERNATIONAL, INC.

ENGINEER
FRANKLAND AND LIENHARD – MODJESKI AND MASTERS

PROJECT
MISSISSIPPI RIVER BRIDGE (LULING)
MAIN RIVER CROSSING SUPERSTRUCTURE
ST. CHARLES PARISH

PROJECT NUMBER	STATE
450-37-02 FAP. I-310-4(35)223	LOUISIANA

ANCHOR ASSEMBLY
SOCKET II DEAD END

PBX 8001
DRAWN M. TELLEZ
DATE 10-6-78
REVISED M.W. HOBBS
DATE 12-17-79

AA-4

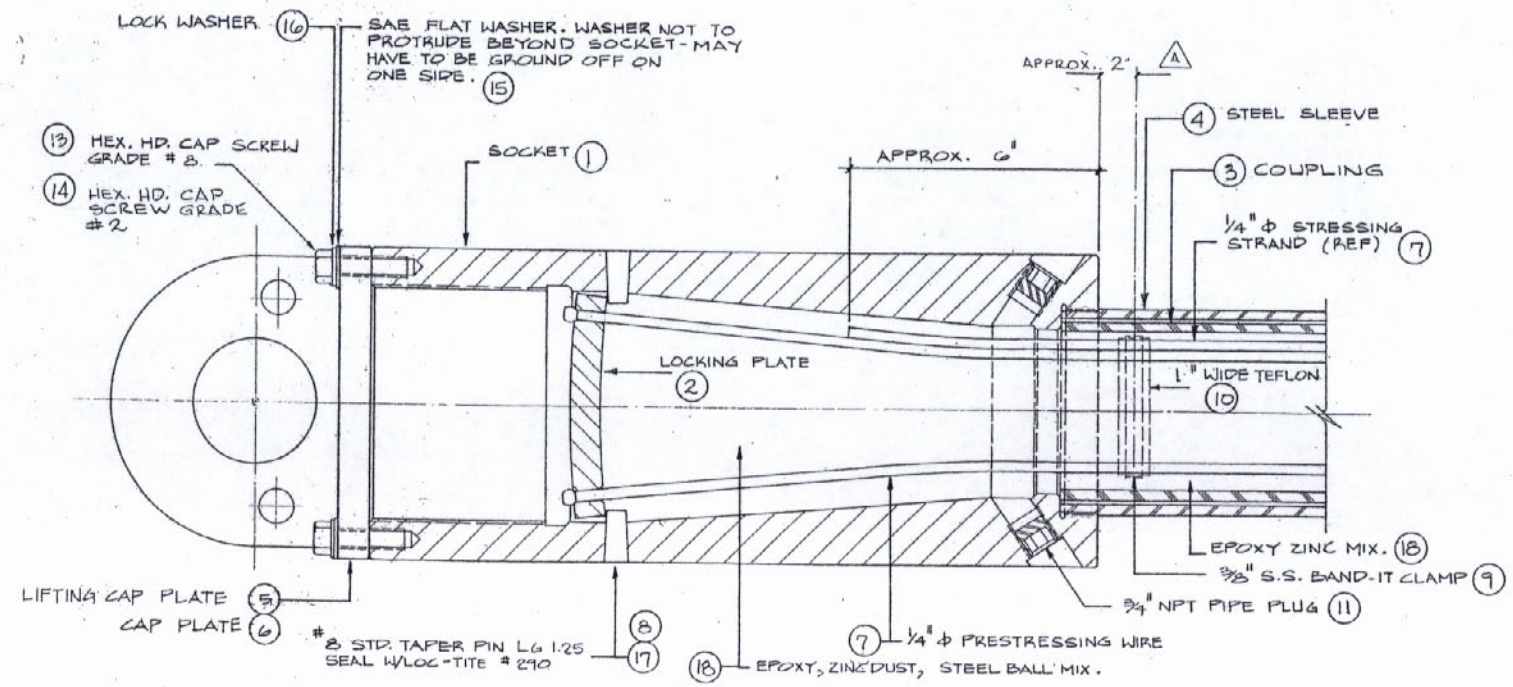

ANCHOR ASSEMBLY SOCKET IV LIVE END

SCALE : 1" = 2"

APPROVED
For Design, Material & Workmanship

Frankland & Lienhard
By I.V. 4-21-81

RECEIVED
APR 7 1981

MAR 30 1981

NOTES:

1. STOP PIN & POUR HOLE NOT SHOWN IN TRUE SECTION.
2. THIS CONFIGURATION FOR LIVE END ONLY.
3. ALL BUTTON HEAD DIAMETERS TO BE 0.360 TO 0.390 ECCENTRICITY OF BUTTON HD. ± 0.010 MAX.
4. ALL BUTTON HEADING MUST BE DONE ON A PREQUALIFIED BUTTON HEADING MACHINE.
5. CAUTION: DURING ASSEMBLY. LOCKING PLATES MUST BE ALIGNED TO PROVIDE PARALLEL WIRE IN BUNDLE.
6. BEFORE SECURING PRESSURE PLATE. ALL TWIST MUST BE TAKEN OUT OF WIRES.
7. USE RTV 102 TO SEAL STEEL SLEEVE INTO SOCKET PRIOR TO PRE-HEAT.
8. AFTER FINAL CURE, REMOVE PRESSURE PLATE AND RUBBER SEAL PLATE. BRUSH VISCONORUST 1601 AMBER RUST PREVENTIVE ON BUTTON HEADS, LOCKING PLATE AND ACME THREADS. INSTALL LIFTING CAP PLATE FOR SHIPMENT USING 1/2 - 13 UNC GR. 8 BOLTS (ITEM 13)
9. REF. DETAIL PART DRAWINGS FOR PAINTING CALLOUTS - PER SPECIAL PROVISIONS.
10. LIFTING CAP PL (ITEM 5) AND 1/2-13 UNC GR.8 BOLTS (ITEM 13) ARE FOR ERECTION ONLY AND ARE TO BE REPLACED WITH CAP PL (ITEM 6) AND 1/2 -13 UNC GR. 2 BOLTS (ITEM 14) FOLLOWING ERECTION. LIFTING CAP PL AND 1/2-13 UNC GR.8 BOLTS ARE TO BE RETURNED TO PRESCON FOR REUSE.

APPROVED
FOR SIZE OF MATERIAL AND STRENGTH OF CONNECTIONS
TONE A. DAVIDSON BRIDGE DESIGN ENGINEER
By REB Date MAY 6 1981

ITEM NO.	QTY REQ'D	MATERIAL	MATERIAL SIZE	SPEC	DESCRIPTION	DRAWING No.
18	A/R		—		EPOXY MIX	
17	A/R		#290		LOC-TITE	
16	4	STEEL	7/8 O.D. x 1/8 THICK		LOCK WASHER	
15	4	STEEL	1 1/8 O.D. x 0.0132 THICK	SAE	FLAT WASHER	
14	2	STEEL	1/2-13 UNC x 1 1/4 LG.	GR. 2	BOLT, HEX. HD. CAP	
13	4	STEEL	1/2-13 UNC x 1 1/4 LG.	GR. 8	BOLT, HEX. HD. CAP	
12	A/R		—		RTV 102 SEALANT	
11	3	STEEL	3/4 NPT		HEX. SOCKET PIPE PLUG	
10	1		1" WIDE x .125 THICK x 10' WG LG.		TEFLON	
9	1	T.B.S.	3/8 WIDE x 20' LG.		BAND IT CLAMP	
8	3	STEEL	# 8 STD. x 1.25 LG.		TAPER PIN	
7	100	STEEL	0.25 DIA. x 240 S.U.T.S.	A-421 TYPE BA	PRESTRESSING WIRE	
6	1				CAP PLATE (NOT SHOWN)	CP-2
5	1				LIFTING CAP PLATE	LCP-2
4	1				SLEEVE	SA-2
3	1				COUPLING	C-2
2	1				LOCKING PLATE	LP-2
1	1				SOCKET	S-5

NO	DATE	REVISION	BY
A	8-9-79	ADDED DIMENSION	KFH
B	11-13-79	REVISED P/L & ADDED ITEM Nos	KFH

THE PRESCON CORPORATION
8918 TESORO DRIVE
SAN ANTONIO, TEXAS 78217
(512) 828-6264

Disclosure Notice
This drawing is the exclusive property of The Prescon Corporation and the information shown may not be used nor the drawing reproduced without written permission of The Prescon Corporation.

CONTRACTOR
WILLIAMS BROTHERS CONSTRUCTION CO., INC.
IHI INTERNATIONAL, INC.

ENGINEER
FRANKLAND AND LIENHARD – MODJESKI AND MASTERS

PROJECT
MISSISSIPPI RIVER BRIDGE (LULING)
MAIN RIVER CROSSING SUPERSTRUCTURE
ST. CHARLES PARISH

PROJECT NUMBER	STATE
450-37-02 FAP. 1-310-4(35)223	LOUISIANA

ANCHOR ASSEMBLY SOCKET IV LIVE END

JOB NO. PBX 8001
DRAWN BY M. TELLEZ
DATE 10-6-78
CHECKED BY TAC
DATE 6/8/79

DWG NUMBER
AA-5
REV. B

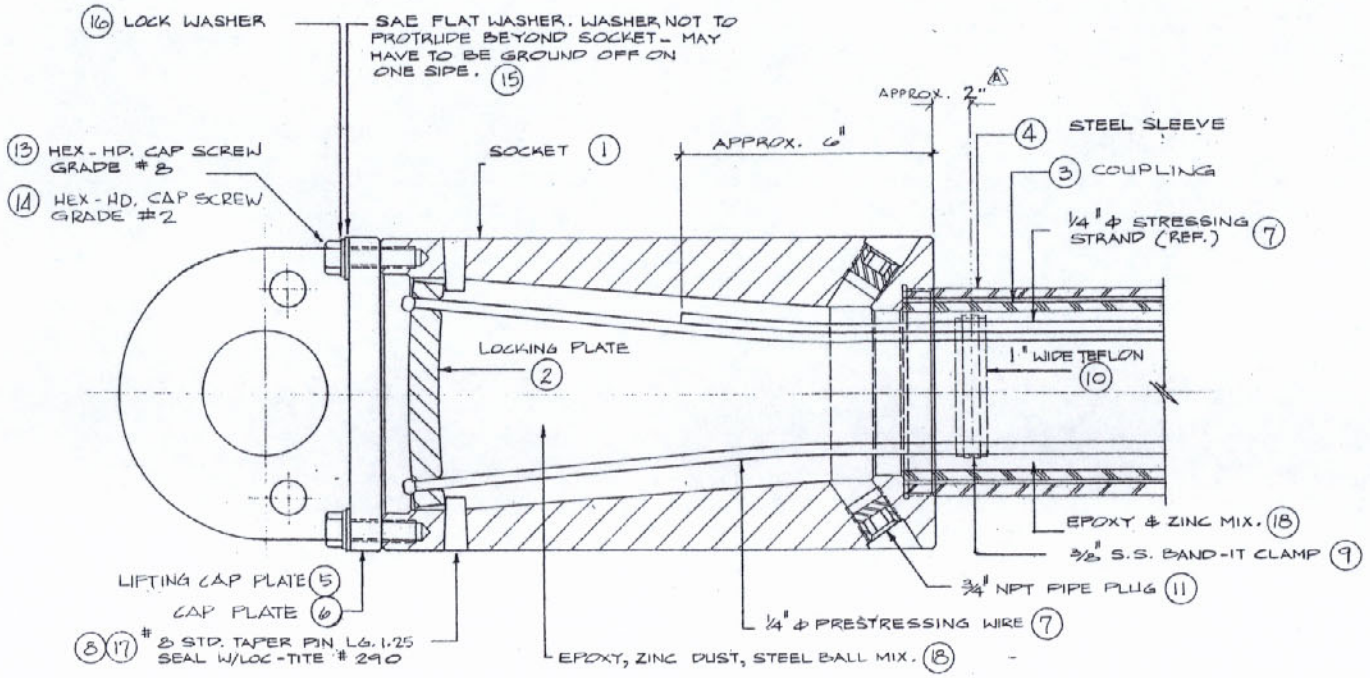

ANCHOR ASSEMBLY SOCKET IV DEAD END

SCALE: 1" = 2"

APPROVED
For Design, Material & Workmanship
Frankland & Lienhard
By I.V. 4-21-81

RECEIVED APR 7 1981

RECEIVED MAR 30 1981

NOTES:

1. STOP PIN & POUR HOLE NOT SHOWN IN TRUE SECTION.
2. THIS CONFIGURATION FOR DEAD END ONLY.
3. ALL BUTTON HEAD DIAMETERS TO BE 0.360 TO 0.390 ECCENTRICITY OF BUTTON HD. ± 0.010 MAX.
4. ALL BUTTON HEADING MUST BE DONE ON A PREQUALIFIED BUTTON HEADING MACHINE.
5. CAUTION: DURING ASSEMBLY, LOCKING PLATES MUST BE ALIGNED TO PROVIDE PARALLEL WIRE IN BUNDLE.
6. BEFORE SECURING PRESSURE PLATE ALL TWIST MUST BE TAKEN OUT OF WIRES.
7. USE RTV 102 TO SEAL STEEL SLEEVE INTO SOCKET PRIOR TO PRE-HEAT.
8. AFTER FINAL CURE, REMOVE PRESSURE PLATE & RUBBER SEAL PLATE. BRUSH VISCONORUST 1601 AMBER RUST PREVENTIVE ON BUTTON HEADS, LOCKING PLATE AND SOCKET SEAL SURFACE. INSTALL LIFTING CAP PLATE FOR SHIPMENT USING 1/2-13 UNC GR. 8 BOLTS (ITEM 13)
9. REF. DETAIL PART DRAWINGS FOR PAINTING CALLOUTS - PER SPECIAL PROVISIONS.
10. LIFTING CAP PL (ITEM 5) AND 1/2-13 UNC GR. 8 BOLTS (ITEM 13) ARE FOR ERECTION ONLY AND ARE TO BE REPLACED WITH CAP PL (ITEM 6) AND 1/2-13 UNC GR. 2 BOLTS (ITEM 14) FOLLOWING ERECTION. LIFTING CAP PL AND 1/2-13 UNC GR. 8 BOLTS ARE TO BE RETURNED TO PRESCON FOR REUSE.

APPROVED
FOR SIZE OF MATERIAL AND STRENGTH OF CONNECTIONS
BRIDGE DESIGN SECTION
LOUIS A. GARRIDO BRIDGE DESIGN ENGINEER
By RFB Date MAY 8 1981

ITEM NO.	QTY. REQ'D	MATERIAL	MATERIAL SIZE	SPEC.	DESCRIPTION	DRAWING No.
18	A/R	—	—	—	EPOXY MIX	
17	A/R	—	#290	—	LOC-TITE	
16	4	STEEL	7/8 O.D. x 1/8 THICK	—	LOCK WASHER	
15	4	STEEL	1 1/16 O.D. x 3/32 THICK	SAE	FLAT WASHER	
14	4	STEEL	1/2-13 UNC x 1 1/4 LG.	GR. 2	BOLT, HEX. HD. CAP	
13	4	STEEL	1/2-13 UNC x 1 1/4 LG.	GR. 8	BOLT, HEX. HD. CAP	
12	A/R	—	—	—	RTV 102 SEALANT	
11	3	STEEL	3/4 NPT	—	HEX SOCKET PIPE PLUG	
10	1	—	1" WIDE x 1/32" THICK x 10 1/16" LG.	—	TEFLON	
9	1	S.S.	3/8 WIDE x 20 3/8 LG.	—	BAND-IT CLAMP	
8	3	STEEL	#8 STD. x 1.25 LG.	—	TAPER PIN	
7	103	STEEL	0.25 DIA. x 240 G.U.T.S.	A-421 TYPE-BA	PRE-STRESSING WIRE	
6	1	—	—	—	CAP PLATE (NOT SHOWN)	CP-2
5	1	—	—	—	LIFTING CAP PLATE	LCP-2
4	1	—	—	—	SLEEVE	SA-2
3	1	—	—	—	COUPLING	C-2
2	1	—	—	—	LOCKING PLATE	LP-2
1	1	—	—	—	SOCKET	S-6

NO	DATE	REVISION	BY
A	8-9-79	ADDED DIMENSION	KEH
B	11-13-79	REVISED P/L & ITEM NO/S	KEH

THE PRESCON CORPORATION
8918 TESORO DRIVE
SAN ANTONIO, TEXAS 78217
(512) 828-6264

Disclosure Notice
This drawing is the exclusive property of The Prescon Corporation and the information shown may not be used nor the drawing reproduced without written permission of The Prescon Corporation

CONTRACTOR: WILLIAMS BROTHERS CONSTRUCTION CO., INC. IHI INTERNATIONAL, INC.

ENGINEER: FRANKLAND AND LIENHARD – MODJESKI AND MASTERS

PROJECT: MISSISSIPPI RIVER BRIDGE (LULING) MAIN RIVER CROSSING SUPERSTRUCTURE ST. CHARLES PARISH

PROJECT NUMBER	STATE
450-37-02 FAP I-310-4(35)223	LOUISIANA

ANCHOR ASSEMBLY SOCKET IV DEAD END

JOB NO. PBX-8001
DRAWN BY M. TELLEZ
DATE 10-9-78
CHECKED BY TAL
DATE 6/8/79

DWG NUMBER AA-6
REV.

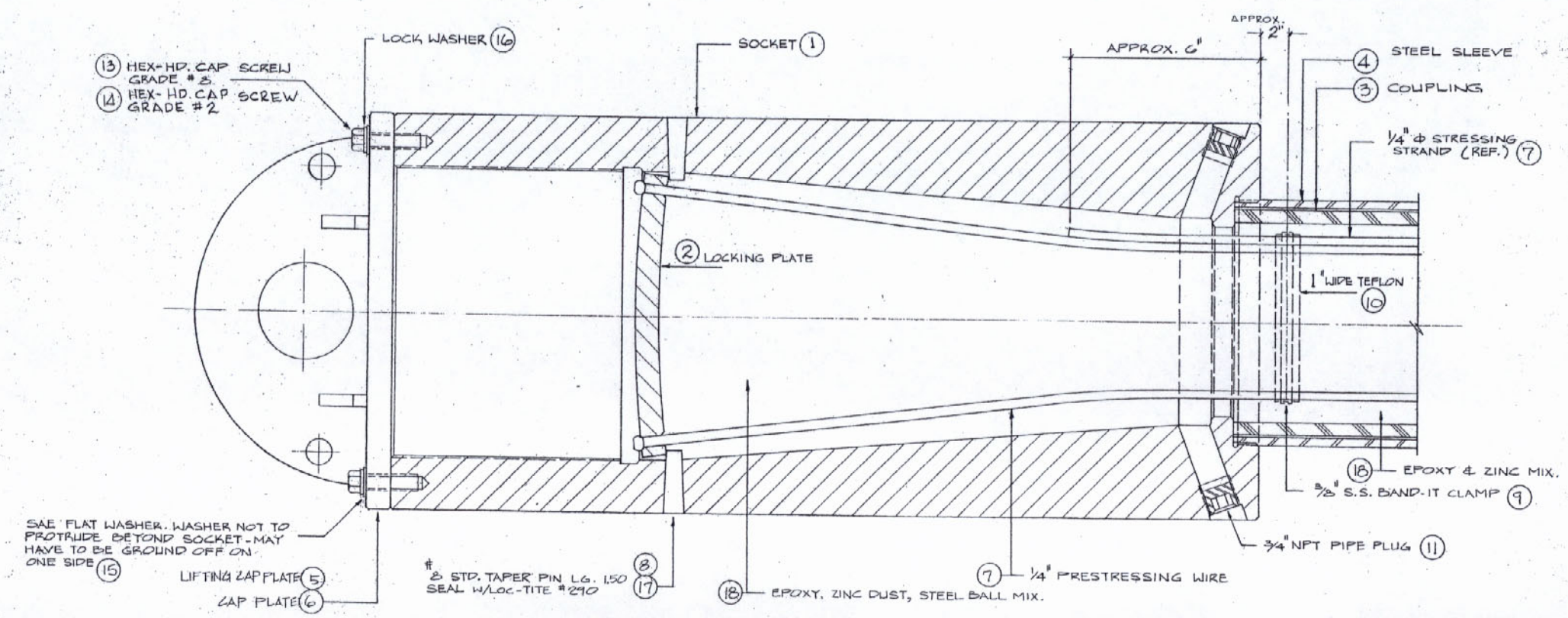

ANCHOR ASSEMBLY SOCKET ▽ LIVE END

SCALE: 1" = 2"

APPROVED
For Design, Material & Workmanship
Frankland & Lienhard
By I.V. 4-21-81

RECEIVED
APR 7 1981

MAR 30 1981

ITEM NO.	QTY. REQ'D.	DESCRIPTION	MATERIAL SPEC.	SIZE	SPEC.	DESCRIPTION OR MANUFACTURER	DRAWING
18	A/R					EPOXY & ZINC MIX	
17	A/R			# 8		LOC-TITE	
16	16	STEEL		1/2"		LOCK WASHER	
15	2	STEEL			AS	FLAT WASHER	
14	6	STEEL		1/2"		HEX HD. CAP SCREW	
13	16	STEEL		1/2"		HEX HD. CAP SCREW	
12	A/R					EPOXY & ZINC MIX	
11	2	STEEL		3/4" NPT		PIPE SOCKET PLUG	
10	1			WIDE		TEFLON	
9	3	STEEL		# 8 STD.		BAND-IT CLAMP	
8	1					TAPER PIN	
7	337	STEEL		1/4" Φ	A/R	PRESTRESSING WIRE	
6	1					CAP PLATE (WELDMENT)	CP-4
5	1					LIFTING CAP PLATE	LCP-4
4	1					SOCKET	SA-3
3	1					COUPLING	3
2	1					LOCKING PLATE	LP-4
1	1					SOCKET	SA-3

10

10

APPROVED
FOR SIZE OF MATERIAL AND STRENGTH OF CONNECTIONS
BRIDGE DESIGN SECTION
LOUISIANA DEPT. OF HIGHWAYS
By RED Date MAY 6 1981
BRIDGE DESIGN ENGINEER

NOTES

1. STOP PIN & POUR HOLE NOT SHOWN IN TRUE SECTION.
2. THIS CONFIGURATION FOR LIVE END ONLY.
3. ALL BUTTON HEAD DIAMETERS TO BE 0.360 TO 0.390 ECCENTRICITY OF BUTTON HD. ± 0.010 MAX.
4. ALL BUTTON HEADING MUST BE DONE ON A PREQUALIFIED BUTTON HEADING MACHINE.
5. CAUTION: DURING ASSEMBLY, LOCKING PLATES MUST BE ALIGNED TO PROVIDE PARALLEL WIRE IN BUNDLE.
6. BEFORE SECURING PRESSURE PLATE ALL TWIST MUST BE TAKEN OUT OF WIRES.
7. USE RTV 102 TO SEAL STEEL SLEEVE INTO SOCKET PRIOR TO PRE-HEAT.
8. AFTER FINAL CURE, REMOVE PRESSURE PLATE & RUBBER SEAL PLATE. BRUSH VISCONORUST 1601 AMBER RUST PREVENTIVE ON BUTTON HEADS, LOCKING PLATE AND ACME THREAD. INSTALL LIFTING CAP PLATE FOR SHIPMENT USING 1/2-13 UNC GR. 8 BOLTS (ITEM 13).
9. REF. DETAIL PART DRAWINGS FOR PAINTING CALLOUTS - PER SPECIAL PROVISIONS.
10. LIFTING CAP # (ITEM 5) AND 1/2-13 UNC GR. 8 BOLTS (ITEM 13) SHOWN ARE FOR ERECTION ONLY AND ARE TO BE REPLACED WITH CAP # (ITEM 6) AND 1/2-13 UNC GR. 2 BOLTS (ITEM 14) FOLLOWING ERECTION. LIFTING CAP # AND 1/2-13 UNC GR. 8 BOLTS ARE TO BE RETURNED TO PRESCON FOR REUSE.

NO	DATE	REVISION	BY

THE PRESCON CORPORATION
8918 TESORO DRIVE
SAN ANTONIO, TEXAS 78217
(512) 828-6264

Disclosure Notice
This drawing is the exclusive property of The Prescon Corporation and the information shown may not be used nor the drawing reproduced without written permission of The Prescon Corporation.

CONTRACTOR
WILLIAMS BROTHERS CONSTRUCTION CO., INC.
IHI INTERNATIONAL, INC.

ENGINEER
FRANKLAND AND LIENHARD – MODJESKI AND MASTERS

PROJECT
MISSISSIPPI RIVER BRIDGE (LULING)
MAIN RIVER CROSSING SUPERSTRUCTURE
ST. CHARLES PARISH

PROJECT NUMBER	STATE
450-37-02 FAP I-310-4(35)223	LOUISIANA

ANCHOR ASSEMBLY
SOCKET ▽ LIVE END

JOB NO. PBX 8001
DRAWN BY M. TELLEZ
DATE 10-9-78
CHECKED BY M.W. HOBLET
DATE 12-19-79

DWG NUMBER
AA-7

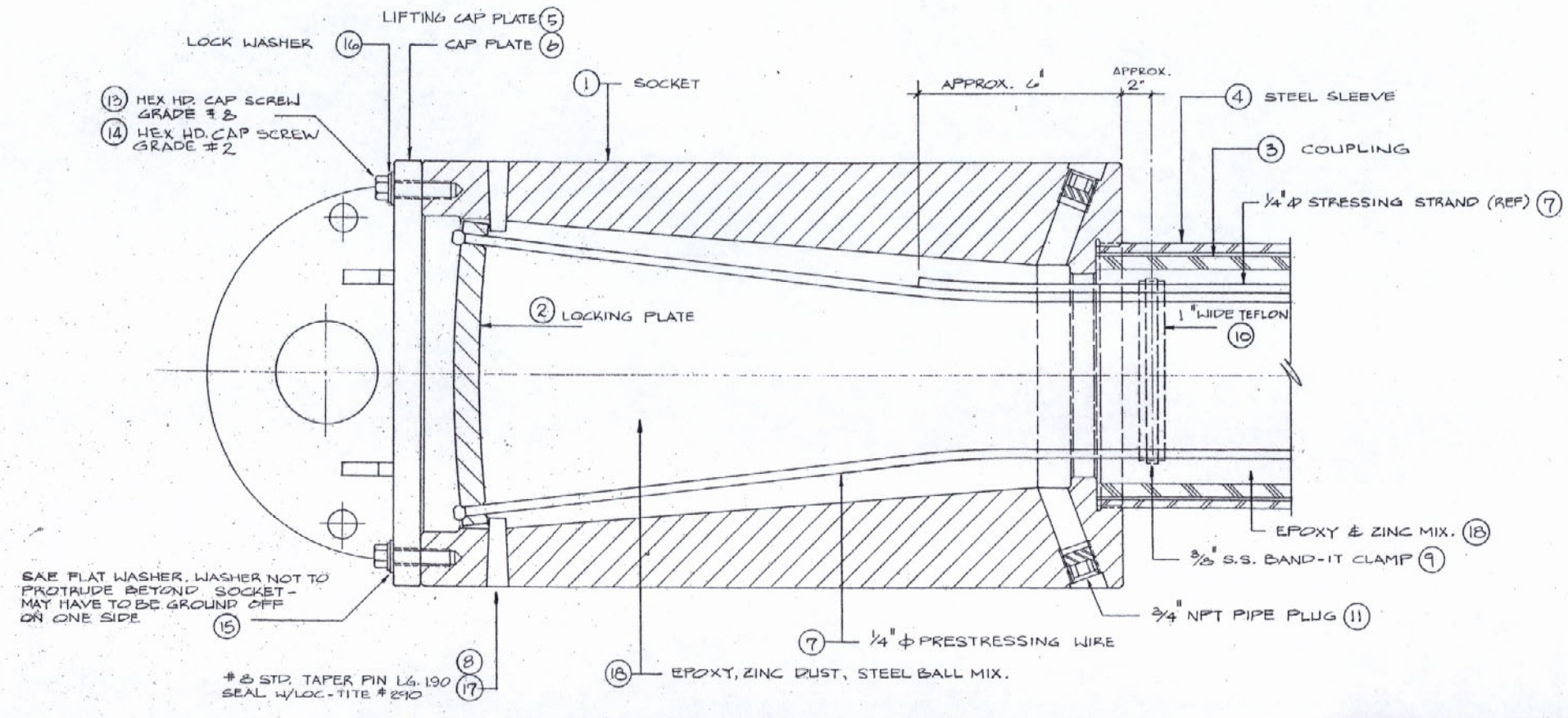

ANCHOR ASSEMBLY SOCKET ▽ DEAD END

SCALE: 1" = 2"

APPROVED
For Design, Material & Workmanship
Frankland & Lienhard
By I.V. 4-21-81

RECEIVED APR 7 1981

MAR 30 1981

ITEM NO.	QTY. REQD.	MATERIAL	MATERIAL SIZE	SPEC.	DESCRIPTION	DRAWING NO.
18	A/R				EPOXY MIX	
17	A/R		# 8		LOC-TITE	
16	6	STEEL	[illegible]		LOCK WASHER	
15	6	STEEL	[illegible]	SAE	FLAT WASHER	
14	2	STEEL	[illegible]		BOLT HEX HD.	
13	6	STEEL	[illegible]		BOLT HEX HD. CAP	
12	A/R				RTV 102 SEALANT	
11	3	STEEL	3/4 NPT		HEX SOCKET PIPE PLUG	
10	1		[illegible]		TEFLON	
9	1	[illegible]	[illegible]		BAND-IT CLAMP	
8	3	STEEL	# 8 STD. x 1.90 LG.		TAPER PIN	
7	367	STEEL	1/4 ϕ x 240'	ASTM A421 TYPE BA	PRESTRESSING WIRE	
6	1				CAP PLATE (KEY SHOWN)	CP-4
5	1				LIFTING CAP PLATE	LP-4
4	1				SLEEVE	SA-3
3	1				COUPLING	CP-3
2	1				LOCKING PLATE	LP-4
1	1				SOCKET	SP-8

NOTES:

1. STOP PIN & POUR HOLE NOT SHOWN IN TRUE SECTION.
2. THIS CONFIGURATION FOR DEAD END ONLY.
3. ALL BUTTON HEAD DIAMETERS TO BE 0.360 TO 0.390 ECCENTRICITY OF BUTTON HD. ± .010 MAX.
4. ALL BUTTON HEADING MUST BE DONE ON A PREQUALIFIED BUTTON HEADING MACHINE.
5. CAUTION: DURING ASSEMBLY, LOCKING PLATES MUST BE ALIGNED TO PROVIDE PARALLEL WIRE IN BUNDLE.
6. BEFORE SECURING PRESSURE PLATE ALL TWIST MUST BE TAKEN OUT OF WIRES.
7. USE RTV 102 TO SEAL STEEL SLEEVE INTO SOCKET PRIOR TO PRE-HEAT.
8. AFTER FINAL CURE, REMOVE PRESSURE PLATE & RUBBER SEAL PLATE. BRUSH VISCONORUST 1601 AMBER RUST PREVENTIVE ON BUTTON HEADS, LOCKING PLATE AND SOCKET SEAL SURFACE. INSTALL LIFTING CAP PLATE FOR SHIPMENT USING 1/2-13 UNC GR. 8 BOLTS (ITEM 13).
9. REF. DETAIL PART DRAWINGS FOR PAINTING CALLOUTS - PER SPECIAL PROVISIONS.
10. LIFTING CAP PL (ITEM 5) AND 1/2-13 UNC GR. 8 BOLTS (ITEM 13) SHOWN ARE FOR ERECTION ONLY AND ARE TO BE REPLACED WITH CAP PL (ITEM 6) AND 1/2-13 UNC GR. 2 BOLTS (ITEM 14) FOLLOWING ERECTION. LIFTING CAP PL AND 1/2-13 UNC GR. 8 BOLTS ARE TO BE RETURNED TO PRESCON FOR REUSE.

APPROVED
FOR SIZE OF MATERIAL AND STRENGTH OF CONNECTIONS PRIOR TO DESIGN SECTION
LOUIS A. CARRIDO BRIDGE DESIGN ENGINEER
MAY 6 1981
RFS Date

NO	DATE	REVISION	BY

THE PRESCON CORPORATION
8918 TESORO DRIVE
SAN ANTONIO, TEXAS 78217
(512) 828-6264

Disclosure Notice
This drawing is the exclusive property of The Prescon Corporation and the information shown may not be used nor the drawing reproduced without written permission of The Prescon Corporation.

CONTRACTOR: WILLIAMS BROTHERS CONSTRUCTION CO., INC.
IHI INTERNATIONAL, INC.

ENGINEER: FRANKLAND AND LIENHARD – MODJESKI AND MASTERS

PROJECT: MISSISSIPPI RIVER BRIDGE (LULING)
MAIN RIVER CROSSING SUPERSTRUCTURE
ST. CHARLES PARISH

PROJECT NUMBER	STATE
450-37-02 FAP. I-310-4(35)223	LOUISIANA

ANCHOR ASSEMBLY
SOCKET ▽ DEAD END

JOB NO. PBX 8001
DRAWN BY M. TELLEZ
DATE 10-9-78
CHECKED BY M.W. HOBLET
DATE 12-17-79

DWG NUMBER AA-8

DATE	REVISION DESCRIPTION	REV. NO.

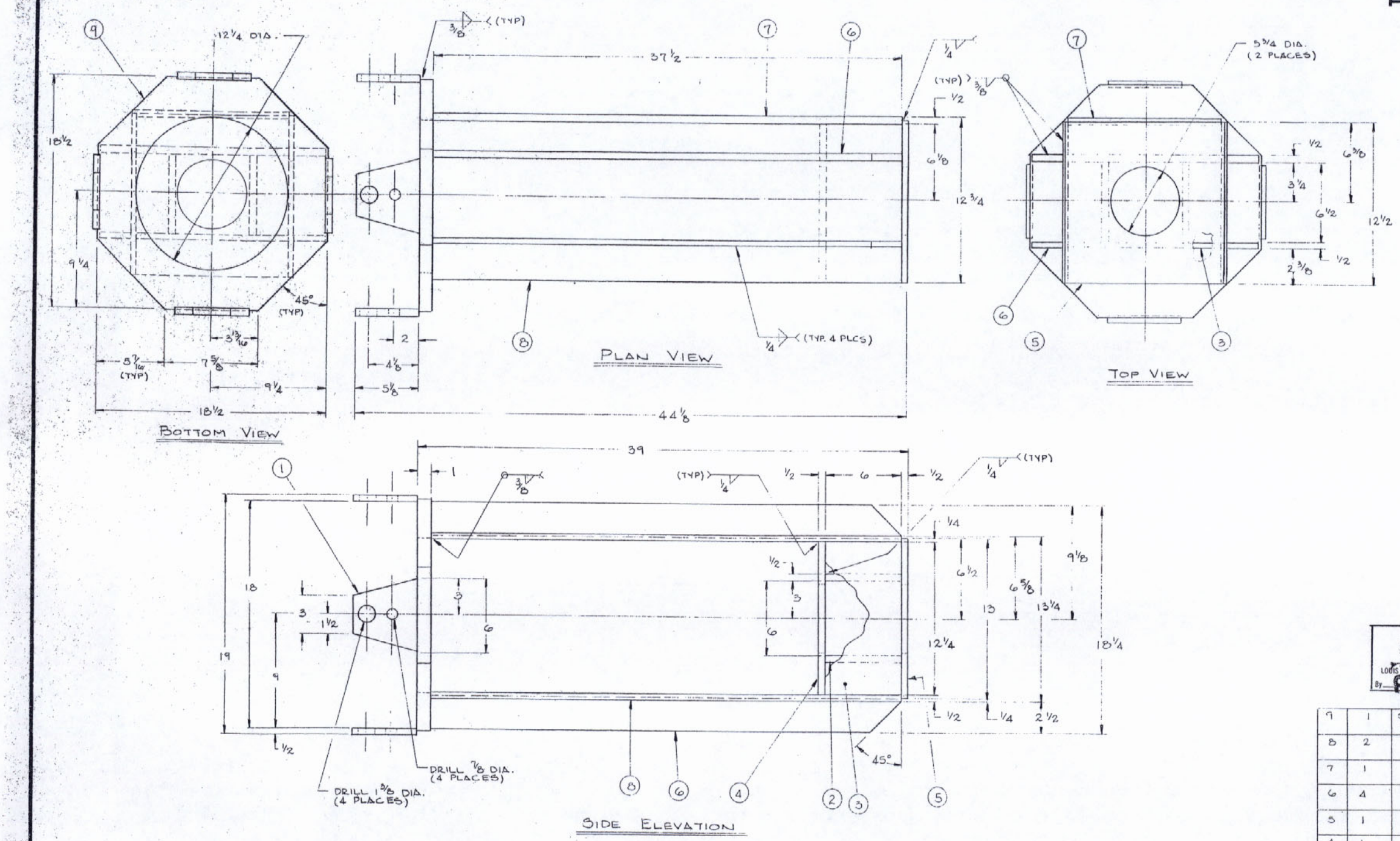

APPROVED
For Design, Material & Workmanship

Frankland & Lienhard
By I.V. 4-21-81

RECEIVED
APR 15 1981

APPROVED
FOR SIZE OF MATERIAL AND STRENGTH OF CONNECTIONS
BRIDGE DESIGN SECTION
LOUIS A. GARRIDO BRIDGE DESIGN ENGINEER
By RFB Date MAY 6 1981

ITEM NO.	QTY REQ'D	MATERIAL	MATERIAL SIZE	SPEC	DESCRIPTION	DRAWING NO.
9	1	STEEL PLATE	1 PL x 18 1/2 x 18 1/2 LG.	A-36	BOTTOM PL	
8	2	↑	1/2 PL x 12 1/2 x 37 1/2 LG.	↑	SIDE PLATE	
7	1		1/2 PL x 13 x 37 1/2 LG.		BACK PLATE	
6	4		1/2 PL x 2 1/2 x 37 1/2 LG.		STIFFENER	
5	1		1/2 PL x 12 1/4 x 12 1/4 LG.		GUIDE PLATE	
4	1		1/2 PL x 12 1/2 x 13 LG.		TOP PLATE	
3	2		1/2 PL x 6 x 12 1/4 LG.		SIDE PLATE	
2	2	↓	1/2 PL x 6 x 6 1/2 LG.	↓	SPACER PL	
1	1	STEEL PLATE	1/2 PL x 5 1/8 x 6 LG.	A-36	EAR	

2. CHAIR CAPACITY = 234.4 kips (F.S. = 1.60).
1. ALL WELD ELECTRODE GRADE 70.

NOTES:

MAR 30 1981

Tolerances	MAT'L WGT. W/ SIZE	FINISHED WGT.	MAX. & MIN. HARDNESS
UNLESS NOTED FRACTION ± 1/16 DECIMAL ± ANGLE ± .5°	HEAT TREAT	FINISH 250	HEAT ASSEMBLY

Freyssinet PRESCON

THE PRESCON CORPORATION
8918 TESORO DRIVE
SAN ANTONIO, TEXAS
78217
a freyssinet international company

Disclosure Notice: This drawing is the exclusive property of The Prescon Corporation and the information shown may not be used nor the drawing reproduced without written permission of The Prescon Corporation

CONTRACTOR: WILLIAMS BROTHERS CONSTRUCTION CO., INC. IHI INTERNATIONAL, INC.

ENGINEER: FRANKLAND AND LIENHARD – MODJESKI AND MASTERS

PROJECT: MISSISSIPPI RIVER BRIDGE (LULING) MAIN RIVER CROSSING SUPERSTRUCTURE ST. CHARLES PARISH

PROJECT NUMBER: [illegible] STATE: LOUISIANA

STRAND CHAIR WELDMENT (600 TON)

PBX 8001
Hong
18 JULY 79
REIFFERT
8-31-79
SCALE 1/4" = 1"

AFC 7
REV. F

DATE	REVISION DESCRIPTION	REV. NO.

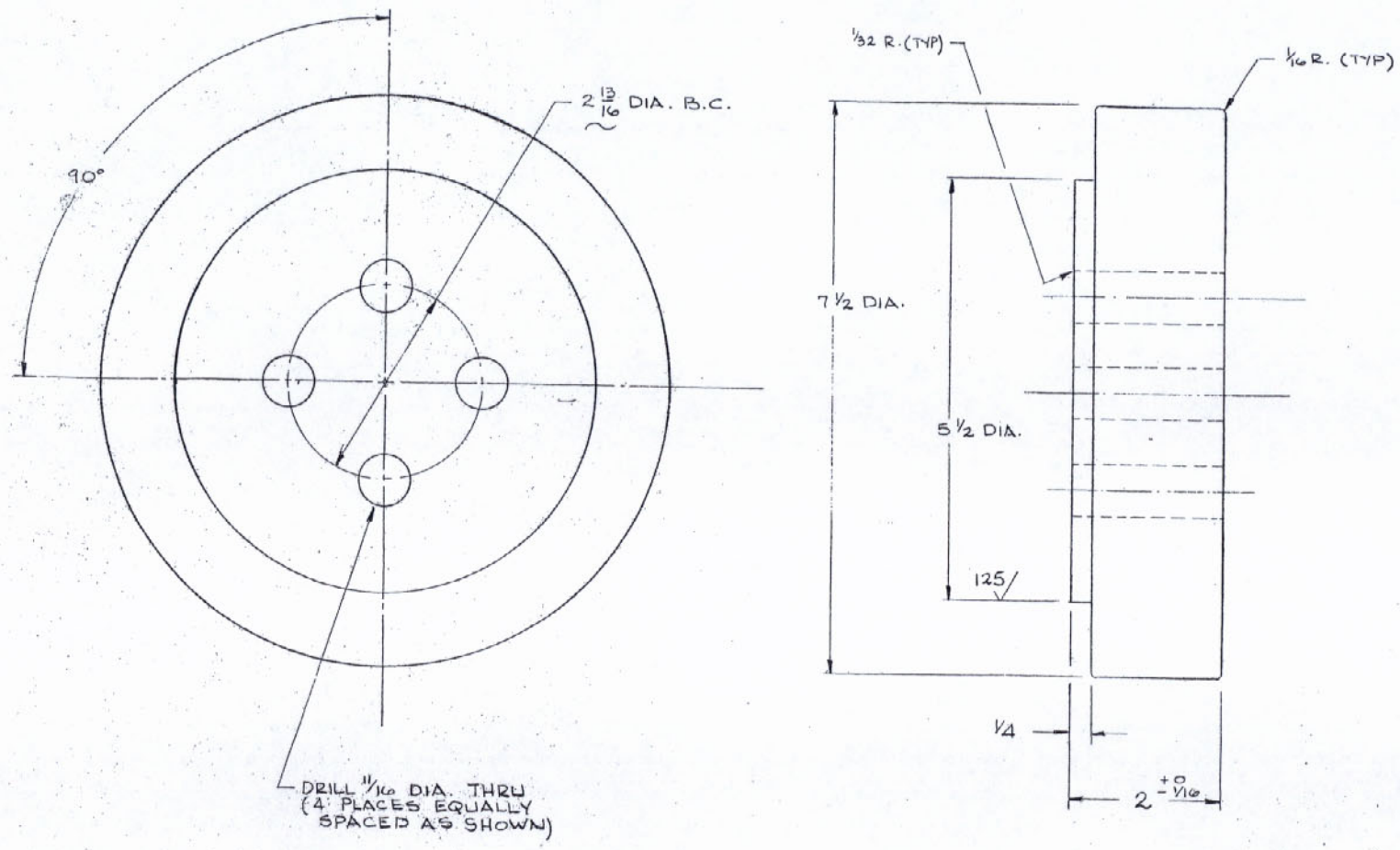

APPROVED
For Design, Material & Workmanship

Frankland & Lienhard
By I.V. 4-21-81

APPROVED
FOR SIZE OF MATERIAL AND STRENGTH OF CONNECTIONS
BRIDGE DESIGN SECTION
LOUIS A. GARRIDO BRIDGE DESIGN ENGINEER
By RFB Date MAY 8 1981

RECEIVED APR 15 1981

MAR 30 1981

ITEM NO.	QTY. REQ'D.	MATERIAL	MATERIAL SIZE	SPEC	DESCRIPTION	DRAWING
1	1	STL PL	7½ ø x 2 THK	AISI C1045	OUTER CHUCK PL	

Tolerances UNLESS NOTED: FRACTION ± 1/16 DECIMAL ± .1 ANGLE ± .5°

MAT'L WGT. OR SIZE | FINISHED WGT. APPROX 21.7# | MAX & MIN HARDNESS
HEAT TREAT | FINISH 125 | HEAT ASSEMBLY

freyssinet PRESCON

THE PRESCON CORPORATION
8918 TESORO DRIVE
SAN ANTONIO, TEXAS
78217
a freyssinet international company

Disclosure Notice
This drawing is the exclusive property of The Prescon Corporation and the information shown may not be used nor this drawing reproduced without written permission of The Prescon Corporation.

CONTRACTOR
WILLIAMS BROTHERS CONSTRUCTION CO., INC.
IHI INTERNATIONAL, INC.

ENGINEER
FRANKLAND AND LIENHARD – MODJESKI AND MASTERS

PROJECT
MISSISSIPPI RIVER BRIDGE (LULING)
MAIN RIVER CROSSING SUPERSTRUCTURE
ST. CHARLES PARISH

PROJECT NUMBER	STATE
450-37-02 FAP. I-310-4(35)223	LOUISIANA

OUTER CHUCK PLATE
(600 TON)

JOB NO. PBX 8001
DRAWN BY HOWN DATE 15 AUG '79
CHECKED BY REFFERT DATE 8-31-79
SCALE: FULL

DWG NUMBER AFC-11
REV. B

DATE	REVISION DESCRIPTION	REV NO

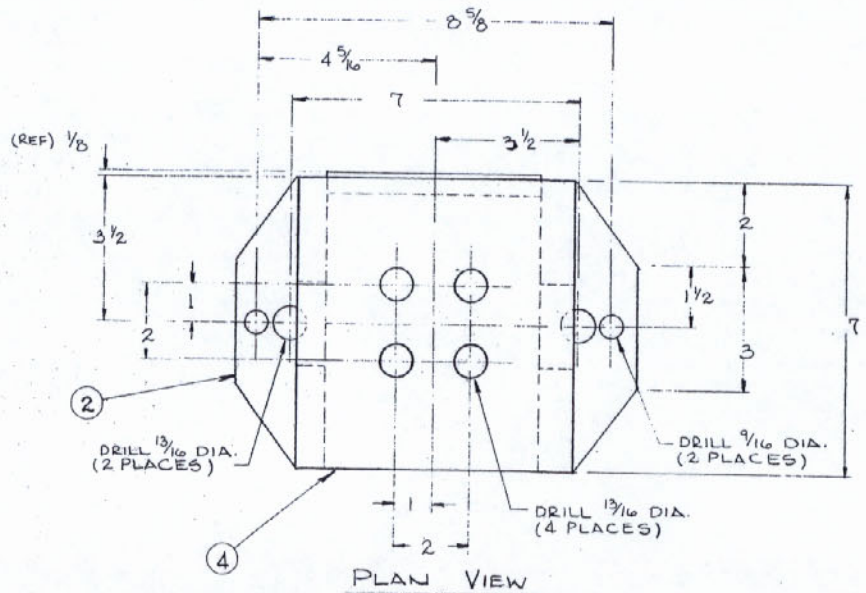

PLAN VIEW

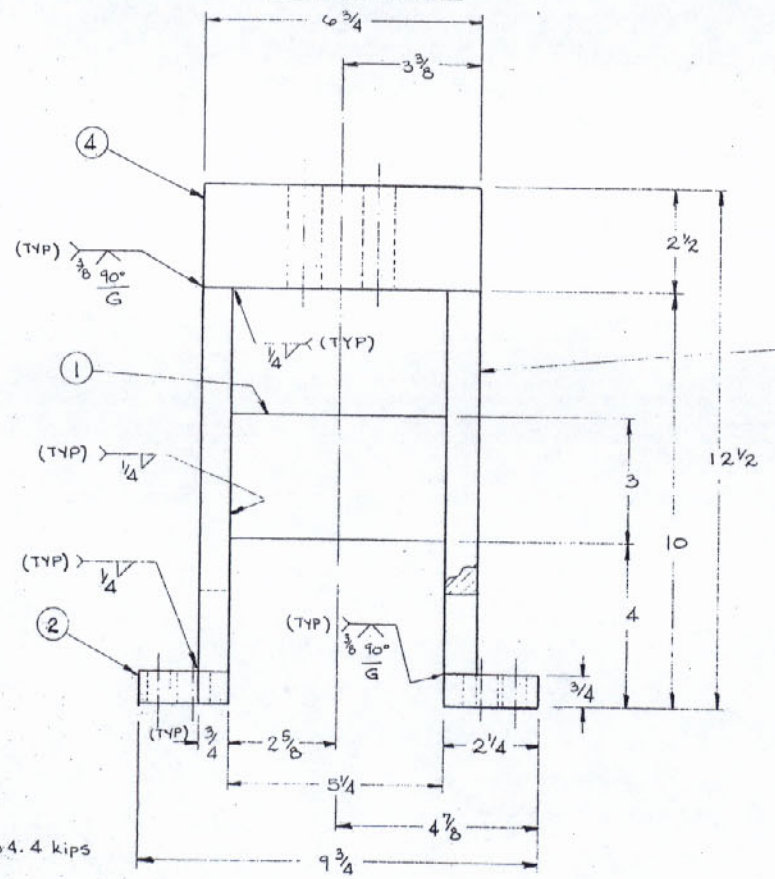

FRONT ELEVATION

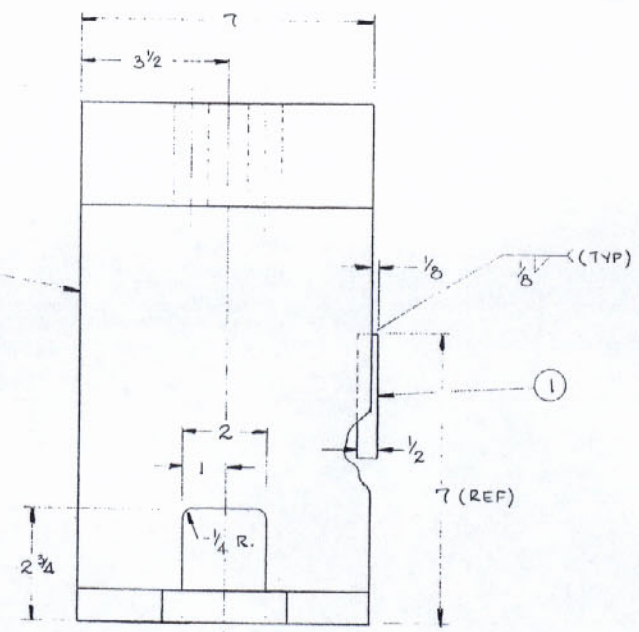

SIDE ELEVATION

2. CHAIR CAPACITY = 234.4 kips (F.S. = 1.60).

1. ALL WELD ELECTRODE GRADE 70.

NOTES:

APPROVED
For Design, Material & Workmanship

Frankland & Lienhard
By I.V. 4-21-81

APPROVED
FOR SIZE OF MATERIAL AND STRENGTH OF CONNECTIONS
BRIDGE DESIGN SECTION
LOUIS A. GARRIDO BRIDGE DESIGN ENGINEER
By RFB Date MAY 6 1981

RECEIVED
APR 15 1981

MAR 30 1981

ITEM NO.	QTY REQ'D	MATERIAL	MATERIAL SIZE	SPEC	DESCRIPTION	DRAWING NO.
4	1	STEEL PLATE	2 1/2 PL x 6 3/4 x 7 LG.	A-36	TOP PLATE	
3	2		3/4 PL x 7 x 9 1/4 LG.		SIDE PLATE	
2	2		3/4 PL x 2 1/4 x 7 LG.		EAR	
1	1	STEEL PLATE	1/2 PL x 3 x 5 1/4 LG.	A-36	BACK PLATE	

Tolerances: UNLESS NOTED
FRACTION: 1/16
DECIMAL:
ANGLE: .5°

WT'L WT OF SIZE | FINISHED WT APPROX. 62.3# | MAX & MIN HARDNESS | HEAT TREAT | FINISH 250 | NEXT ASSEMBLY

Freyssinet PRESCON

THE PRESCON CORPORATION
8918 TESORO DRIVE
SAN ANTONIO, TEXAS
78217
a freyssinet international company

Disclosure Notice: This drawing is the exclusive property of the Prescon Corporation and the information shown may not be used nor the drawing reproduced without written permission of the Prescon Corporation.

CONTRACTOR: WILLIAMS BROTHERS CONSTRUCTION CO., INC.
IHI INTERNATIONAL, INC.

ENGINEER: FRANKLAND AND LIENHARD - MODJESKI AND MASTERS

PROJECT: MISSISSIPPI RIVER BRIDGE (LULING)
MAIN RIVER CROSSING SUPERSTRUCTURE
ST CHARLES PARISH

PROJECT NUMBER | STATE

RAM CHUCK ADAPTER FOR .6 DIA. STRAND
(600 TON)

PBX 8001
HÖHN
17 JULY 79
REIFFERT
8-31-79
SCALE: 1/2" = 1"

AFC-12
REV. G

DATE	REVISION DESCRIPTION	REV NO
1-22-80	AS NOTED PER FRANKLAND & LIENHARD	D

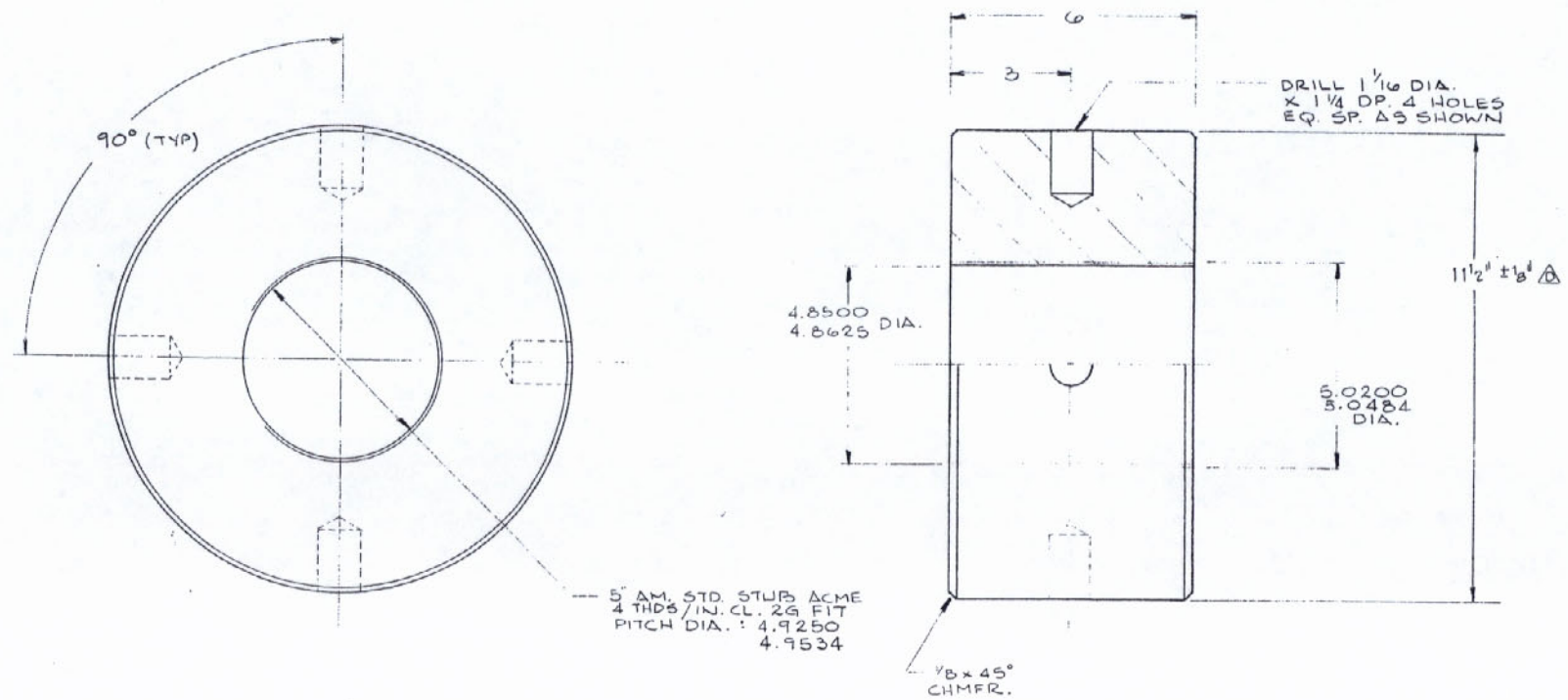

Specifications For Full Rods, Nuts and Fittings

Material: Electric Furnace Quality 4340, hardened to 28 to 34 Rc minimum yield 130,000 psi. Material to be capable of meeting Ultrasonic Inspection MIL-I-8950 Class A prior to machining and Magnetic Particle Inspection MIL-I-6868 after machining.

Material must be free of scale, prior to sonic, and exhibit a 250 microfinish or better, on entire surface to be soniced.

1.) Machine as per drawing.
2.) Polish to a surface finish of 32 rms.
3.) Inspect for straightness of rod. Max. Deviation .025" per 12.0"
4.) Inspect surface finish.
5.) Test Coupons: 3 charpy "V" notch longitudinal (with notch transverse) tests at 35 ft/lbs. Charpy "V" notch material shall be stamped to correspond with material used. 2 longitudinal tensile tests at half radius. Hardness tests across diameter. All tests at room temperature and according to ASTM A370, E18, E23, Charpy at 0°F.
6.) Thread Inspection: including lead accuracy and thread form as shown.
7.) Thoroughly clean by vapor degreasing with Trichlorethylene and dry.
8.) Apply Dyflube 1A all over.

The following documentation is required:
Certification of inspection for
a). Surface finish
b). Ultrasonic testing
c). Magnetic particle testing
d). Thread inspection

... And

a). Charpy test results
b). Yield strength
c). Tensile strength
d). Elongation @ rupture
f). Hardness readings

Notes: Remove all burrs and break sharp edges.

APPROVED
For Design, Material & Workmanship
Frankland & Lienhard
By I.V. 4-21-81

RECEIVED APR 15 1981

APPROVED
FOR SIZE OF MATERIAL AND
STRENGTH OF CONNECTIONS
BRIDGE DESIGN SECTION
LOUIS A. GARDINO BRIDGE DESIGN ENGINEER
By RFB Date MAY 6 1981

MAR 30 1981

ITEM No.	QTY. REQ'D	MATERIAL	MATERIAL SIZE	SPEC.	DESCRIPTION	DRAWING No.
1	4	STEEL	11 1/2 DIA. X 6 LG.	SEE NOTES	NUT	

TOLERANCES UNLESS NOTED:
FRACTION: 1/16
.XXX ± .010
DECIMAL: .XX ± .030
ANGLE: ± .5°

WT. WET W/ SIZE	FINISHED WET APPROX. 143 #	MAX & MIN HARDNESS
HEAT TREAT	FINISH 125	HEAT ASSEMBLY

Freyssinet PRESCON

THE PRESCON CORPORATION
8918 TESORO DRIVE
SAN ANTONIO, TEXAS
78217
a freyssinet international company

Disclosure Notice
This drawing is the exclusive property of The Prescon Corporation and the information shown may not be used nor the drawing reproduced without written permission of The Prescon Corporation

CONTRACTOR
WILLIAMS BROTHERS CONSTRUCTION CO., INC.
IHI INTERNATIONAL, INC.

ENGINEER
FRANKLAND AND LIENHARD – MODJESKI AND MASTERS

PROJECT
MISSISSIPPI RIVER BRIDGE (LULING)
MAIN RIVER CROSSING SUPERSTRUCTURE
ST. CHARLES PARISH

PROJECT NUMBER: 80-31-02 FAP: 310-4.351122
STATE: LOUISIANA

5" NUT

DRN BY: HBNJ PTL
20 JULY 79
CHKD BY: REIFFERT
8-31-79
SCALE: 1/2" = 1"

AFC-18
REV. D

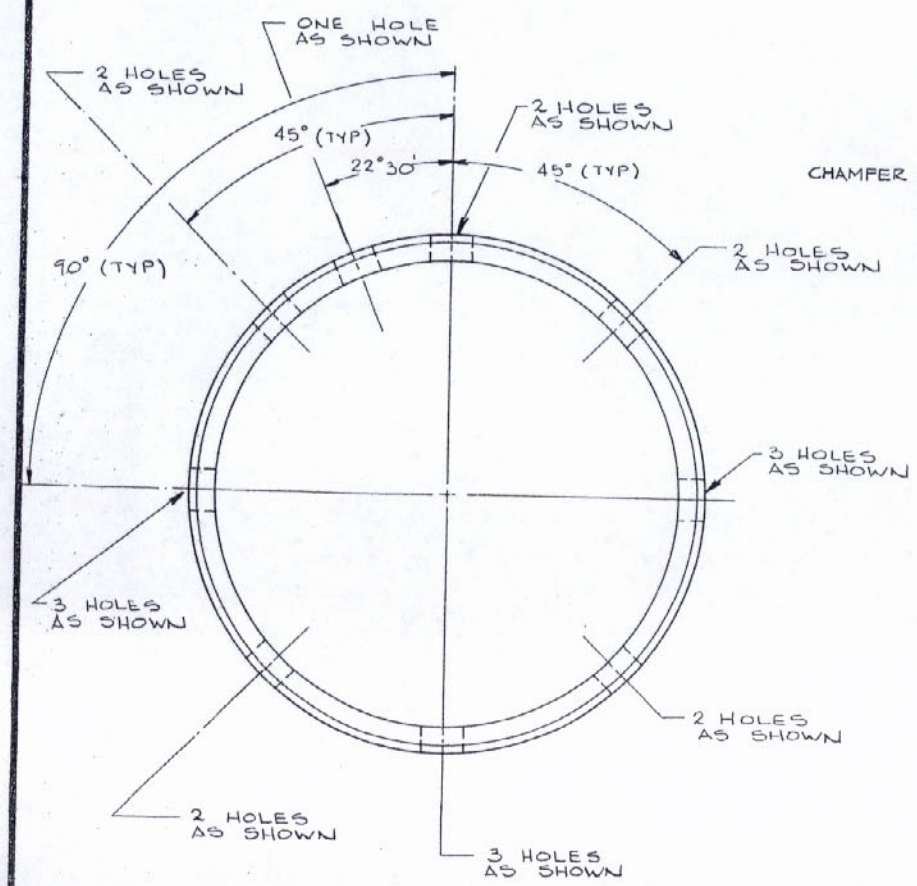

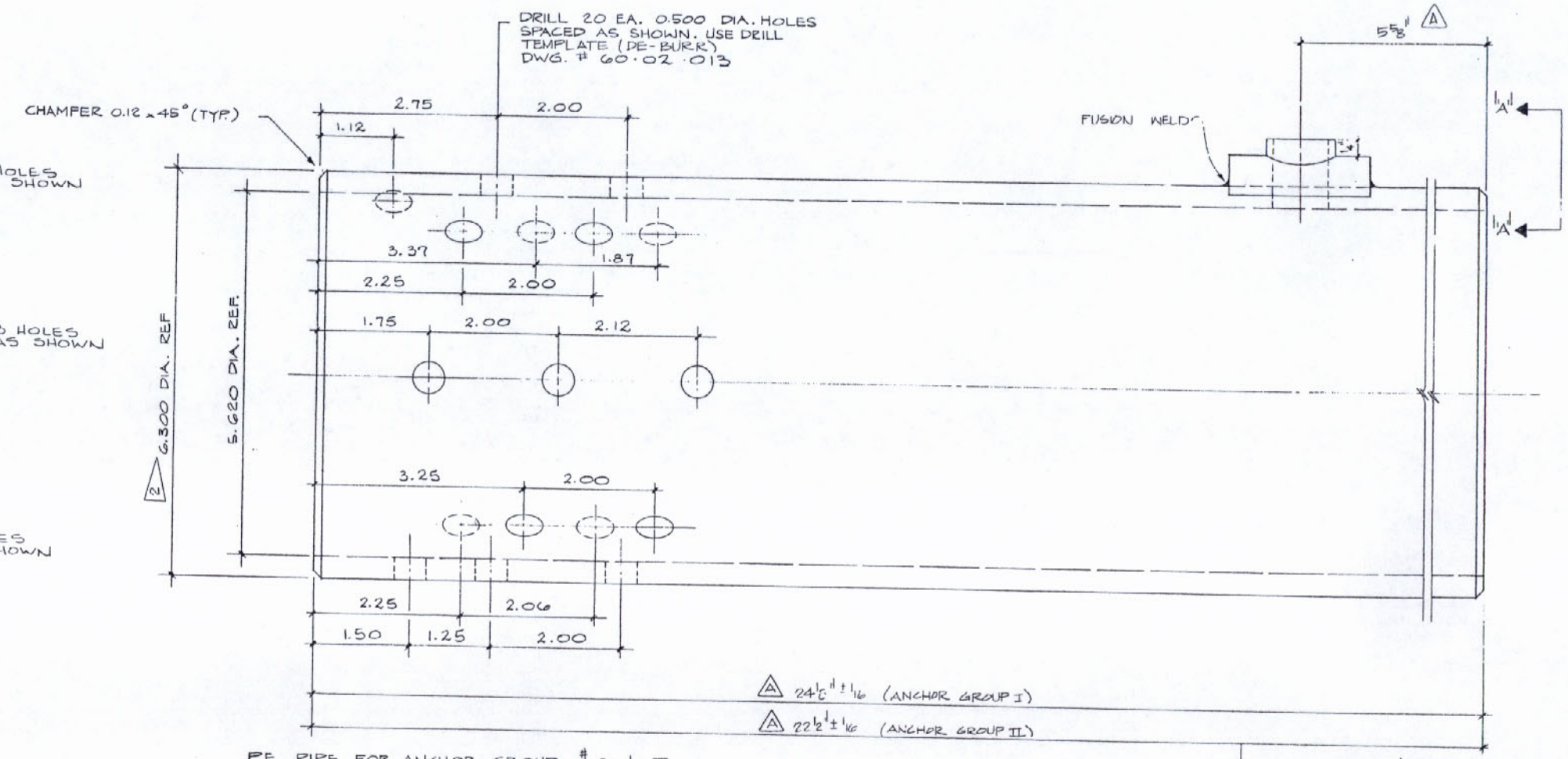

P.E. PIPE FOR ANCHOR GROUP. # I & II

SCALE: 1" = 1"

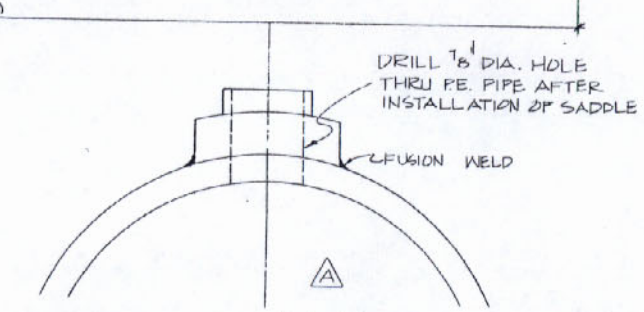

VIEW "A"-"A"

A 2. REFERENCE PURCHASE SPECIFICATION FOR PIPE TOLERANCES.

1. ALL DIMENSIONS AND ANGLES ARE REFERENCE ONLY SEE TEMPLATE.

NOTES:

APPROVED
For Design, Material & Workmanship

Frankland & Lienhard
By I.V. 4-21-81

APPROVED
FOR SIZE OF MATERIAL AND STRENGTH OF CONNECTIONS
BRIDGE DESIGN SECTION
LOUIS A. GARRIDO BRIDGE DESIGN ENGINEER
By RFB Date MAY 6 1981

RECEIVED
APR 7 1981

RECEIVED
MAR 30 1981

NO	DATE	REVISION	
A	11-15-79	ADDED DIM. & VIEW A-A	MR

THE PRESCON CORPORATION
8918 TESORO DRIVE
SAN ANTONIO, TEXAS 78217
(512) 828-6264

Disclosure Notice
This drawing is the exclusive property of The Prescon Corporation and the information shown may not be used nor the drawing reproduced without written permission of The Prescon Corporation.

CONTRACTOR
WILLIAMS BROTHERS CONSTRUCTION CO., INC.
IHI INTERNATIONAL, INC.

ENGINEER
FRANKLAND AND LIENHARD – MODJESKI AND MASTERS

PROJECT
MISSISSIPPI RIVER BRIDGE (LULING)
MAIN RIVER CROSSING SUPERSTRUCTURE
ST. CHARLES PARISH

PROJECT NUMBER	STATE
450-37-02 FAP. I-310-4(35)223	LOUISIANA

COUPLING BLACK P.E. PIPE FOR ANCHORS GROUP I & II

JOB NO. PBX 8001
DRAWN BY M. TELLEZ
DATE 10-3-76
CHECKED BY T. CASTELLAN
DATE 10/23/79

DWG. NUMBER C-1

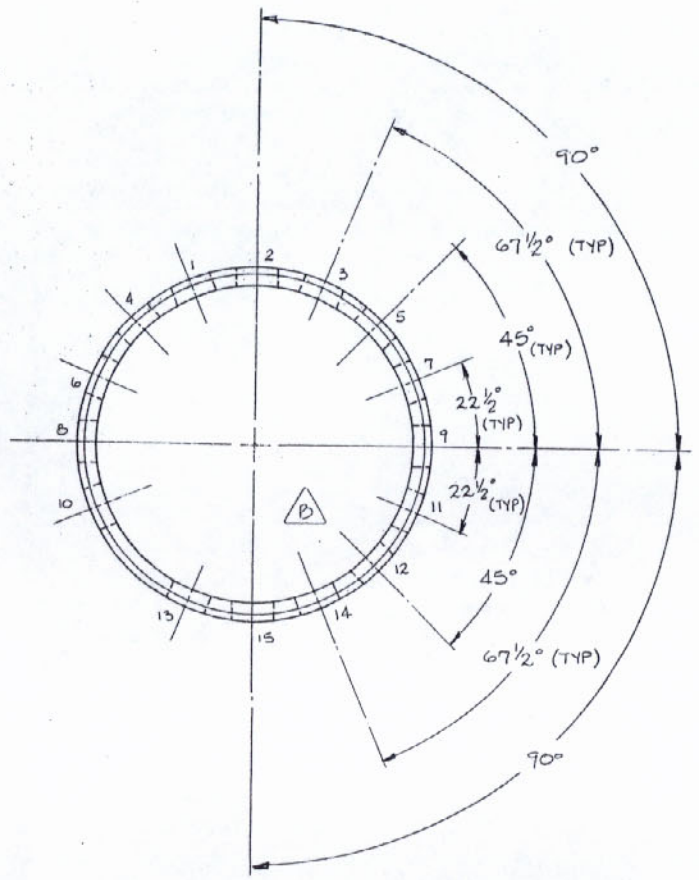

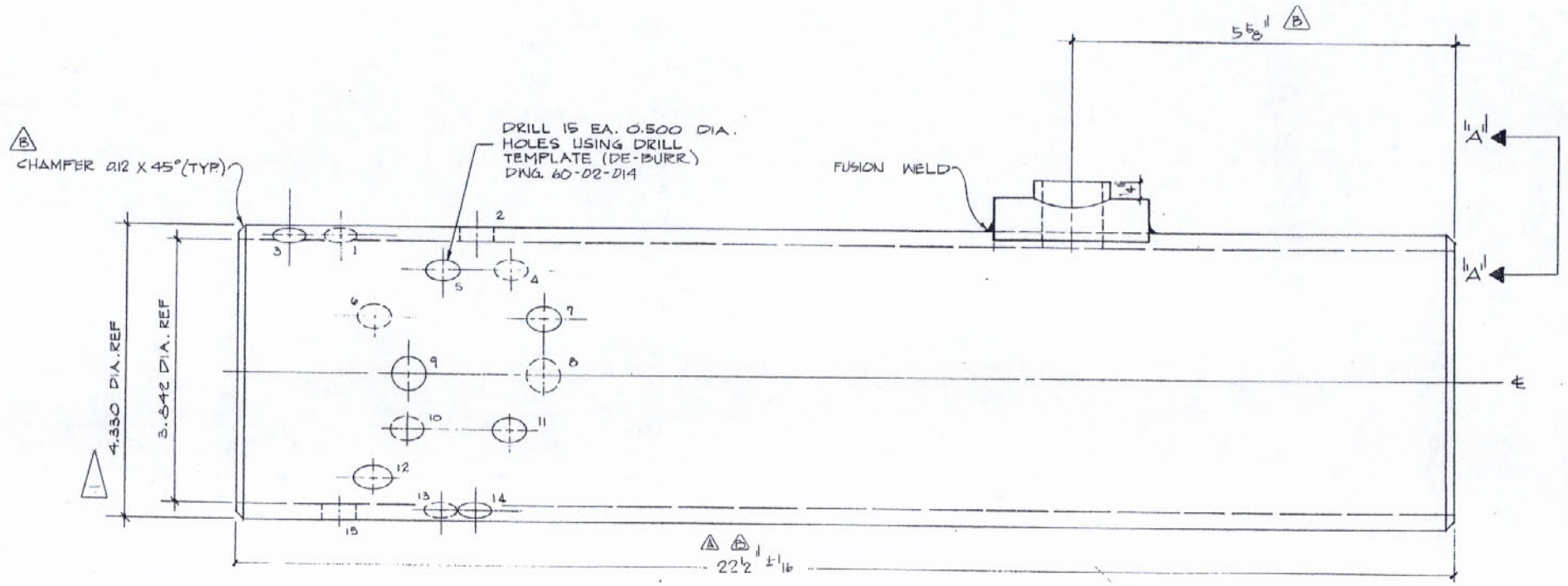

P.E. PIPE FOR ANCHOR GROUP IV

SCALE: FULL

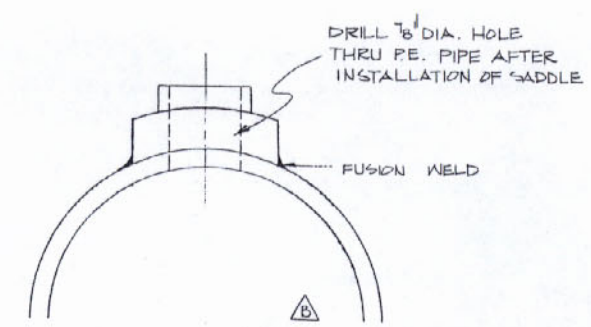

VIEW "A"-A

APPROVED
For Design, Material & Workmanship

Frankland & Lienhard
By I.V. 4-21-81

APPROVED
FOR SIZE OF MATERIAL AND STRENGTH OF CONNECTIONS
BRIDGE DESIGN SECTION
LOUIS RED BRIDGE DESIGN ENGINEER
By ____ Date MAY 6 1981

RECEIVED
APR 7 1981

MAR 30 1981

NOTES:

B 2. ALL DIMENSIONS AND ANGLES ARE REFERENCE ONLY SEE TEMPLATE.

1. REFERENCE PURCHASE SPECIFICATION FOR PIPE TOLERANCES.

NO.	DATE	REVISION	BY
A	8-9-79	ADDED TOLERANCE	KFH
B	11-15-79	ADDED ANGLES & DIM. ALSO NOTE 2	KFH

THE PRESCON CORPORATION
8918 TESORO DRIVE
SAN ANTONIO, TEXAS 78217
(512) 628-6264

Disclosure Notice
This drawing is the exclusive property of The Prescon Corporation and the information shown may not be used nor the drawing reproduced without written permission of The Prescon Corporation.

CONTRACTOR
WILLIAMS BROTHERS CONSTRUCTION CO., INC.
IHI INTERNATIONAL, INC.

ENGINEER
FRANKLAND AND LIENHARD – MODJESKI AND MASTERS

PROJECT
MISSISSIPPI RIVER BRIDGE (LULING)
MAIN RIVER CROSSING SUPERSTRUCTURE
ST. CHARLES PARISH

PROJECT NUMBER	STATE
450-37-02 FAP. I-310-4(35)223	LOUISIANA

COUPLING BLACK P.E. PIPE FOR ANCHORS GROUP IV

JOB NO. PBX 8001
DRAWN BY M. TELLEZ
DATE 10-3-78
CHECKED BY TAC
DATE 6/8/79

DWG NUMBER
C-2
REV. B

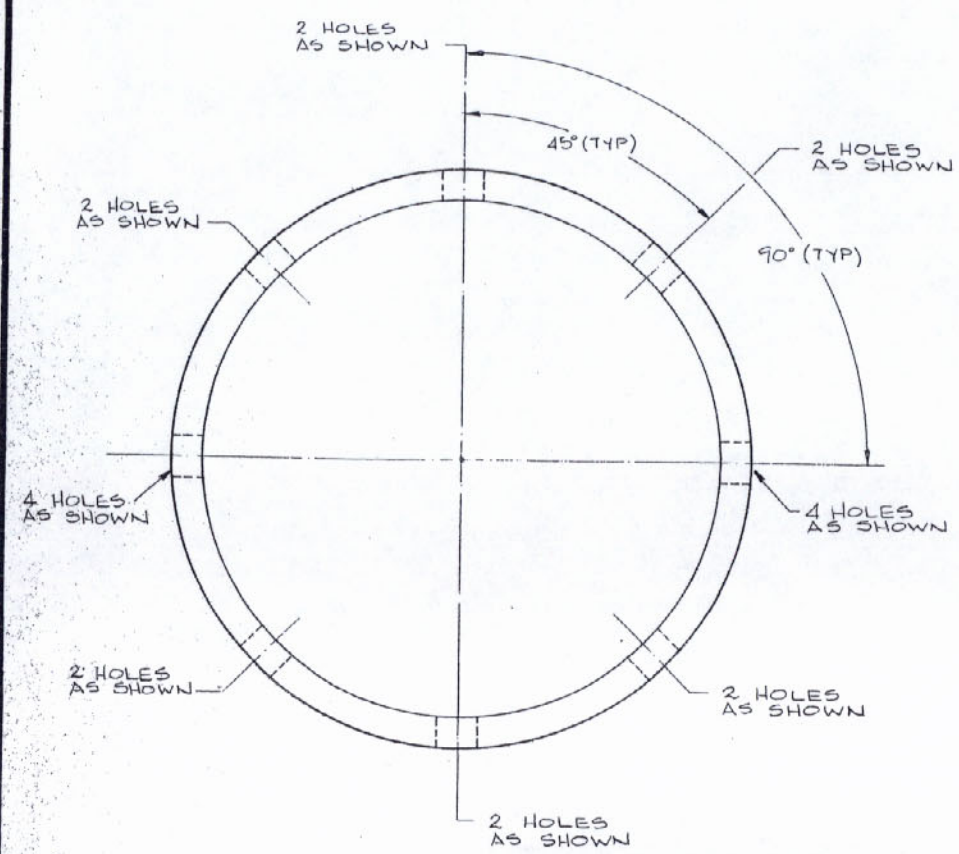

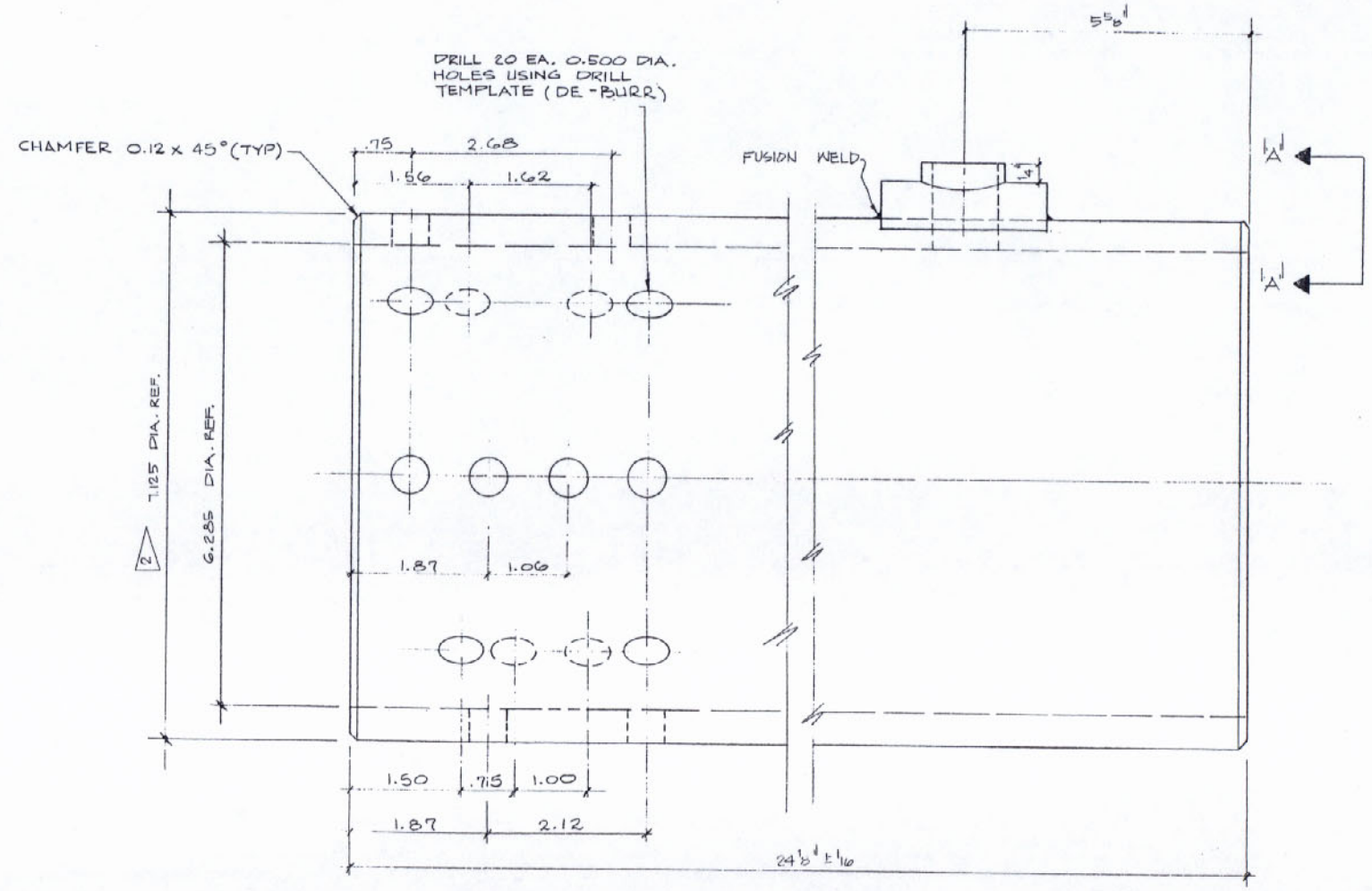

P.E. PIPE FOR ANCHOR SOCKET V

SCALE: FULL

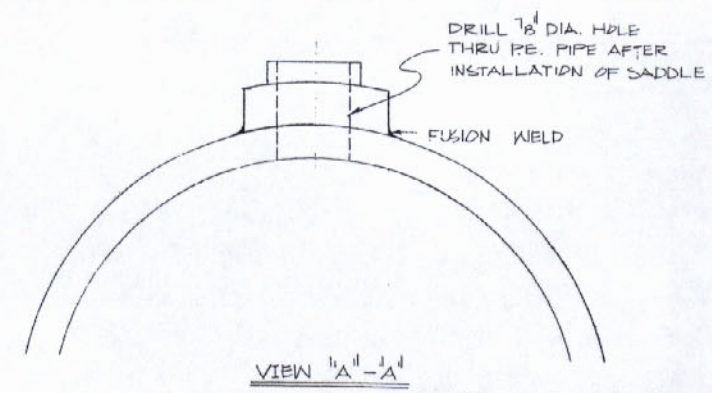

VIEW "A"-"A"

APPROVED
For Design, Material & Workmanship

Frankland & Lienhard
By I.V. 4-21-81

APPROVED
FOR SIZE OF MATERIAL AND STRENGTH OF CONNECTIONS
BRIDGE DESIGN SECTION
LOUIS A. GARRIDO BRIDGE DESIGN ENGINEER
By RFB Date MAY 6 1981

RECEIVED
APR 7 1981

MAR 30 1981

2 REFERENCE PURCHASE SPECIFICATION FOR PIPE TOLERANCES.

1. ALL DIMENSIONS AND ANGLES ARE REFERENCE ONLY SEE TEMPLATE

NOTES:

NO.	DATE	REVISION	BY

THE PRESCON CORPORATION
8918 TESORO DRIVE
SAN ANTONIO, TEXAS 78217
(512) 828-6264

Disclosure Notice
This drawing is the exclusive property of The Prescon Corporation and The information shown may not be used nor the drawing reproduced without written permission of The Prescon Corporation.

CONTRACTOR
WILLIAMS BROTHERS CONSTRUCTION CO., INC.
IHI INTERNATIONAL, INC.

ENGINEER
FRANKLAND AND LIENHARD – MODJESKI AND MASTERS

PROJECT
MISSISSIPPI RIVER BRIDGE (LULING)
MAIN RIVER CROSSING SUPERSTRUCTURE
ST. CHARLES PARISH

PROJECT NUMBER	STATE
450-37-02 FAP. I-310-4(35)223	LOUISIANA

COUPLING BLACK P.E. PIPE FOR ANCHORS SOCKET V

JOB NO. PBX 8001
DRAWN BY M. TELLEZ
DATE 10-16-78
CHECKED BY M.W. HEALEY
DATE 12-19-78

DWG. NUMBER C-3

DATE	REVISION DESCRIPTION	REV NO

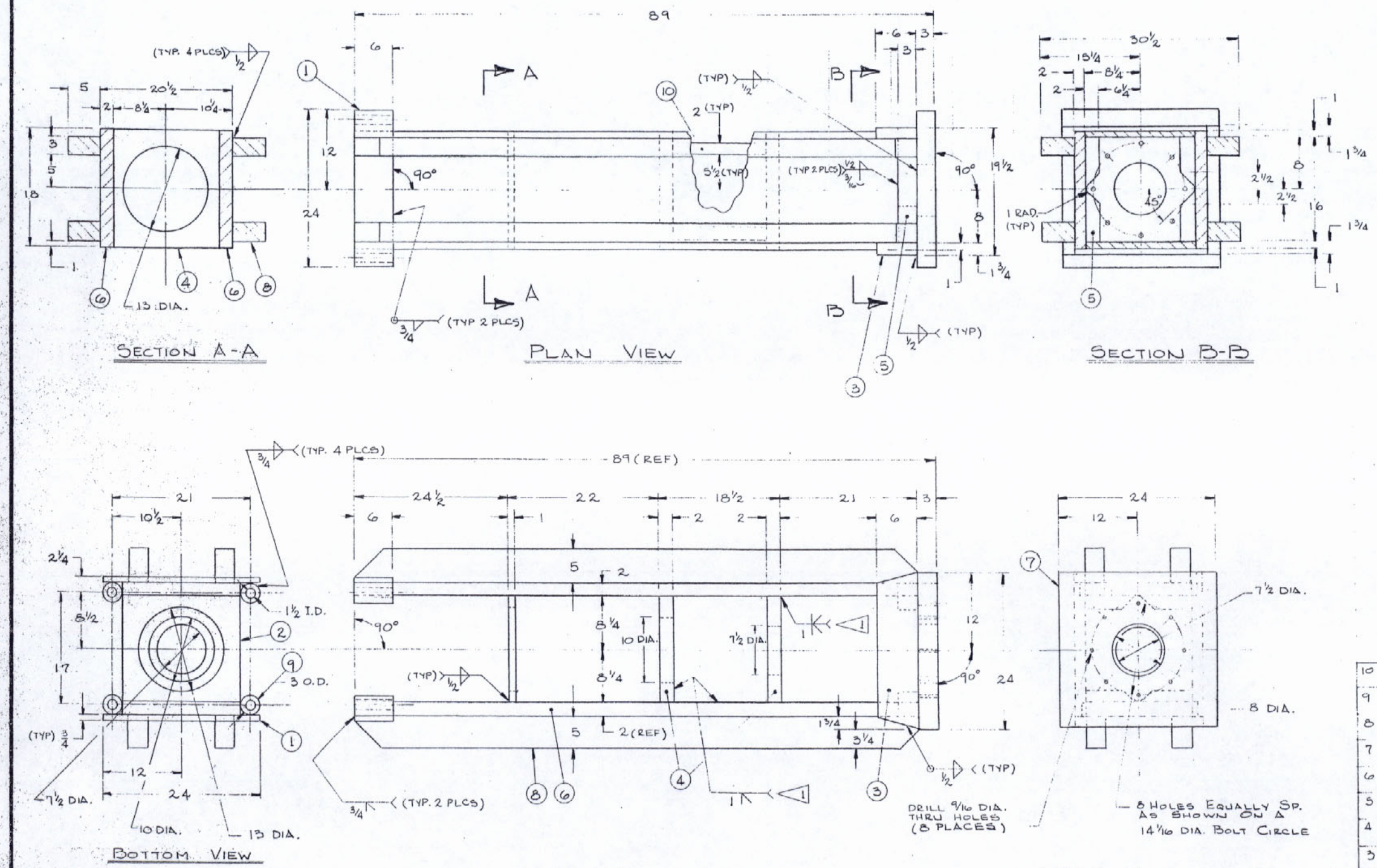

2. ALL WELD ELECTRODE GRADE 70.

1. ALL WELDS THUS INDICATED WILL BE SUBJECTED TO 100% X-RAY EXAM., APPROPRIATE STRESS RELIEVING TECHNIQUES WILL BE EMPLOYED TO MAINTAIN TOLERANCES INDICATED.

NOTES:

APPROVED
For Design ... Fraenkland & Lienhard
By I.V. 4-21-81

APPROVED
FOR SIZE OF MATERIAL AND STRENGTH OF CONNECTIONS
BRIDGE DESIGN SECTION
LOUIS A. GARRIDO BRIDGE DESIGN ENGINEER
By RFB Date MAY 6 1981

MAR 30 1981 RECEIVED APR 7 1981

ITEM No.	QTY. REQ'D.	MATERIAL	MATERIAL SIZE	SPEC.	DESCRIPTION	DRAWING No.
10	2	STEEL PLATE	2 PL x 14½ x 16½ LG.		SIDE PLATE, (UPPER GUIDE)	
9	4	STEEL R.B.	3 DIA x 6 LG.		CONNECTOR	
8	4	STEEL PLATE	3 PL x 5 x 86 LG.		STIFFENER	
7	1	STEEL PLATE	3 PL x 24 x 24 LG.		TOP COVER PLATE	
6	2	STEEL PLATE	2 PL x 18 x 86 LG.		SIDE PLATE	
5	2	STEEL PLATE	2 PL x 3 x 16 LG.		STRAP PLATE - TOP PLATE	
4	2	STEEL PLATE	2 PL x 16½ x 18 LG.		GUIDE PLATE (UPPER)	
3	2	STEEL PLATE	1¾ PL x 6 x 24 LG.		GUSSET SIDE PLATE	
2	1	STEEL PLATE	1 PL x 16½ x 18 LG.		GUIDE PLATE (LOWER)	
1	2	STEEL PLATE	¾ PL x 6 x 24 LG.		STRAP PLATE - CONNECTOR	

Tolerances: UNLESS NOTED FRACTION ± 1/16; DECIMAL ±; ANGLE ± .5°

WAT'L WGT OF SIZE | FINISHED WGT APPROX 5860# | MAX & MIN HARDNESS MIN. YIELD 50,000 PSI | HEAT TREAT | FINISH 250 | HEAT ASSEMBLY

Freyssinet PRESCON

THE PRESCON CORPORATION
8918 TESORO DRIVE
SAN ANTONIO, TEXAS
78217
a freyssinet international company

Disclosure Notice: This drawing is the exclusive property of The Prescon Corporation and the information shown may not be used nor the drawing reproduced without written permission of The Prescon Corporation

CONTRACTOR: WILLIAMS BROTHERS CONSTRUCTION CO., INC.
IHI INTERNATIONAL, INC.

ENGINEER: FRANKLAND AND LIENHARD - MODJESKI AND MASTERS

PROJECT: MISSISSIPPI RIVER BRIDGE (LULING)
MAIN RIVER CROSSING SUPERSTRUCTURE
ST. CHARLES PARISH

PROJECT NUMBER	STATE
450-37-02 FAP 1-310-4(351)223	LOUISIANA

RAM CHAIR WELDMENT
(1000 TON)

PBX 8001
HÖHN
15 JULY 79
REIFFERT
8-31-79
SCALE: 1/8" = 1"

PWE 1
REV. F

DATE	REVISION DESCRIPTION	REV. NO.
1-23-80	AS NOTED	E

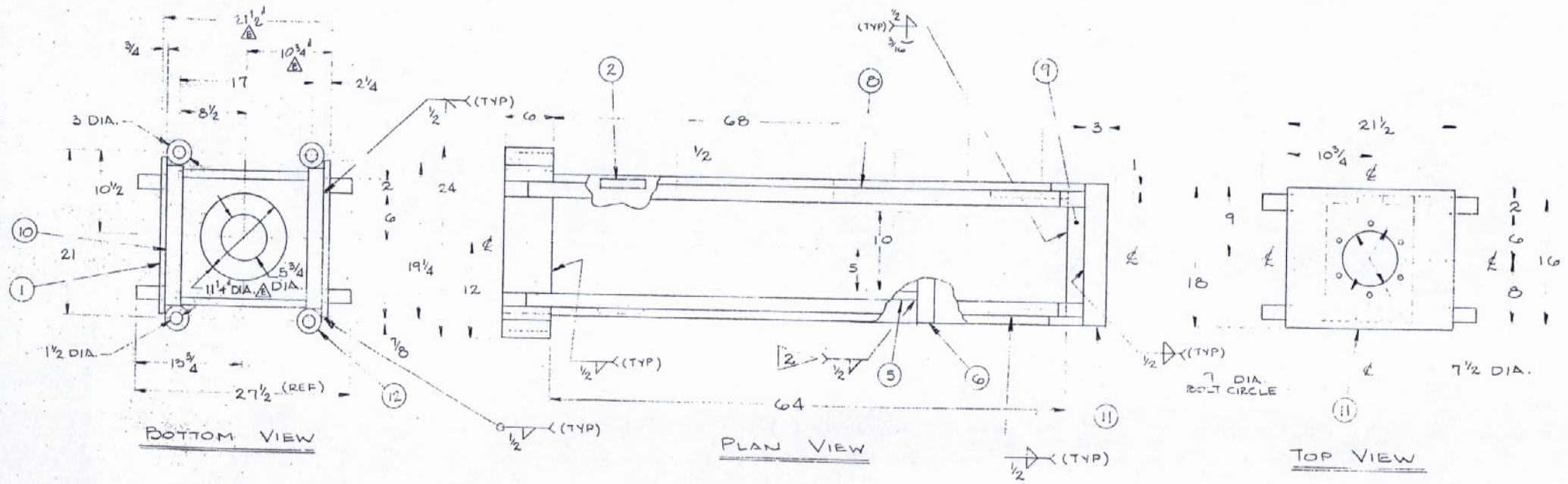

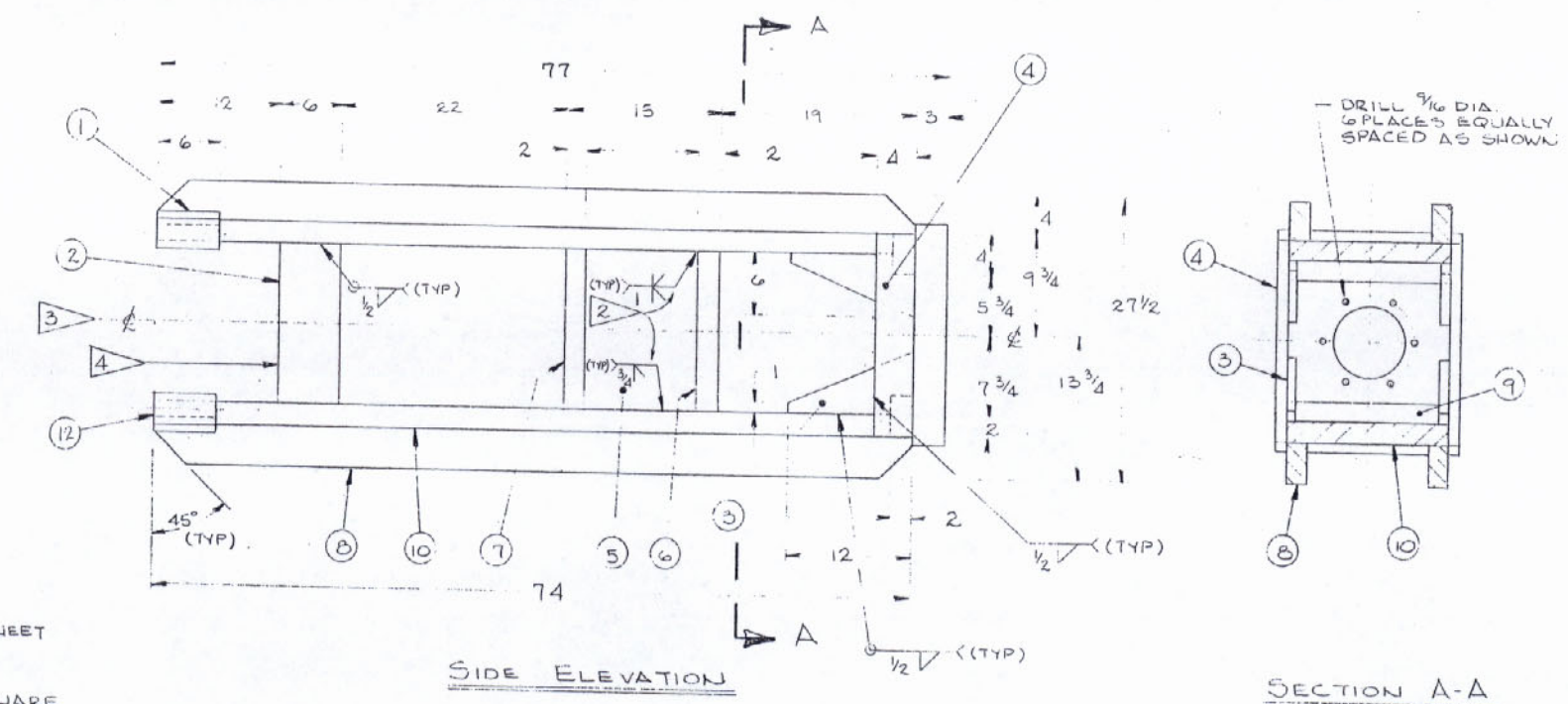

4 FOR SHIM DETAIL THIS AREA SEE SHEET PWE-2A.

3 BASE AND RAM END MUST BE SQUARE TO CENTER LINE WITHIN ±.005 IN 12".

2 WELDS WILL BE SUBJECTED TO 100% X-RAY EXAMINATION. APPROPRIATE STRESS RELIEVING TECHNIQUES WILL BE EMPLOYED TO MAINTAIN TOLERANCES INDICATED.

1. ALL WELD ELECTRODE GRADE 70.

NOTES:

APPROVED FOR SIZE OF MATERIAL AND STRENGTH OF CONNECTIONS BRIDGE DESIGN SECTION
LOUIS ... BRIDGE DESIGN ENGINEER
By RAB Date MAY 6 1981

By I.V. 4-21-81

MAR 30 1981

ITEM No.	QTY. REQ'D.	MATERIAL	MATERIAL SIZE	SPEC	DESCRIPTION	DRAWING No.
12	4	STEEL R.B.	3 DIA x 6 LG	50,000 PSI YIELD	SPACER (BOLT)	
11	1	STEEL PLATE	3 PL x 18 x 21½ LG.	↑	TOP PL	
10	2	↑	¾ PL x 18 x 64 LG		SIDE PL	
9	2		2 PL x 4 x 16 LG.		TIE PL	
8	4		2 PL x 4 x 74 LG.		STIFFENER	
7	1		2 PL x 15½ x 18 LG.		GUIDE PL (LOWER)	
6	1		2 PL x 15½ x 18 LG.		GUIDE PL (UPPER)	
5	2		1 PL x 11 x 15½ LG		SIDE PL (GUIDE PL'S)	
4	2		1 PL x 4 x 19¼ LG.		STRAP PL (UPPER)	
3	4		1 PL x 6 x 12 LG.		GUSSET PL	
2	2	↓	½ PL x 6 x 15½ LG.	↑	SPACER PL (LOWER)	
1	2	STEEL PLATE	¾ PL x 6 x 24 LG.	50000 PSI YIELD	STRAP PL (LOWER)	

Tolerances UNLESS NOTED: FRACTION ± 1/16; .XXX ± .010; DECIMAL ±; .XX ± .030; ANGLE ± .5

NET'L WGT. BY SIZE | FINISHED WGT. APPROX. 2861# | MAX. & MIN. HARDNESS | HEAT TREAT | FINISH 250 | HEAT ASSEMBLY

Freyssinet PRESCON

THE PRESCON CORPORATION
8918 TESORO DRIVE
SAN ANTONIO, TEXAS
78217
a freyssinet international company

Disclosure Notice: This drawing is the exclusive property of The Prescon Corporation and the information shown may not be used nor the drawing reproduced without written permission of The Prescon Corporation.

CONTRACTOR: WILLIAMS BROTHERS CONSTRUCTION CO., INC. IHI INTERNATIONAL, INC.

ENGINEER: FRANKLAND AND LIENHARD – MODJESKI AND MASTERS

PROJECT: MISSISSIPPI RIVER BRIDGE (LULING) MAIN RIVER CROSSING SUPERSTRUCTURE ST. CHARLES PARISH

PROJECT NUMBER	STATE
450-37-02 FAP. I-310-4(35)223	LOUISIANA

RAM CHAIR WELDMENT (600 TON)

PBX 8001
DRAWN 24 JULY 79
CHECKED FEIEFFT
DATE 8-31-79

PWE-2

DATE	REVISION DESCRIPTION	REV NO.

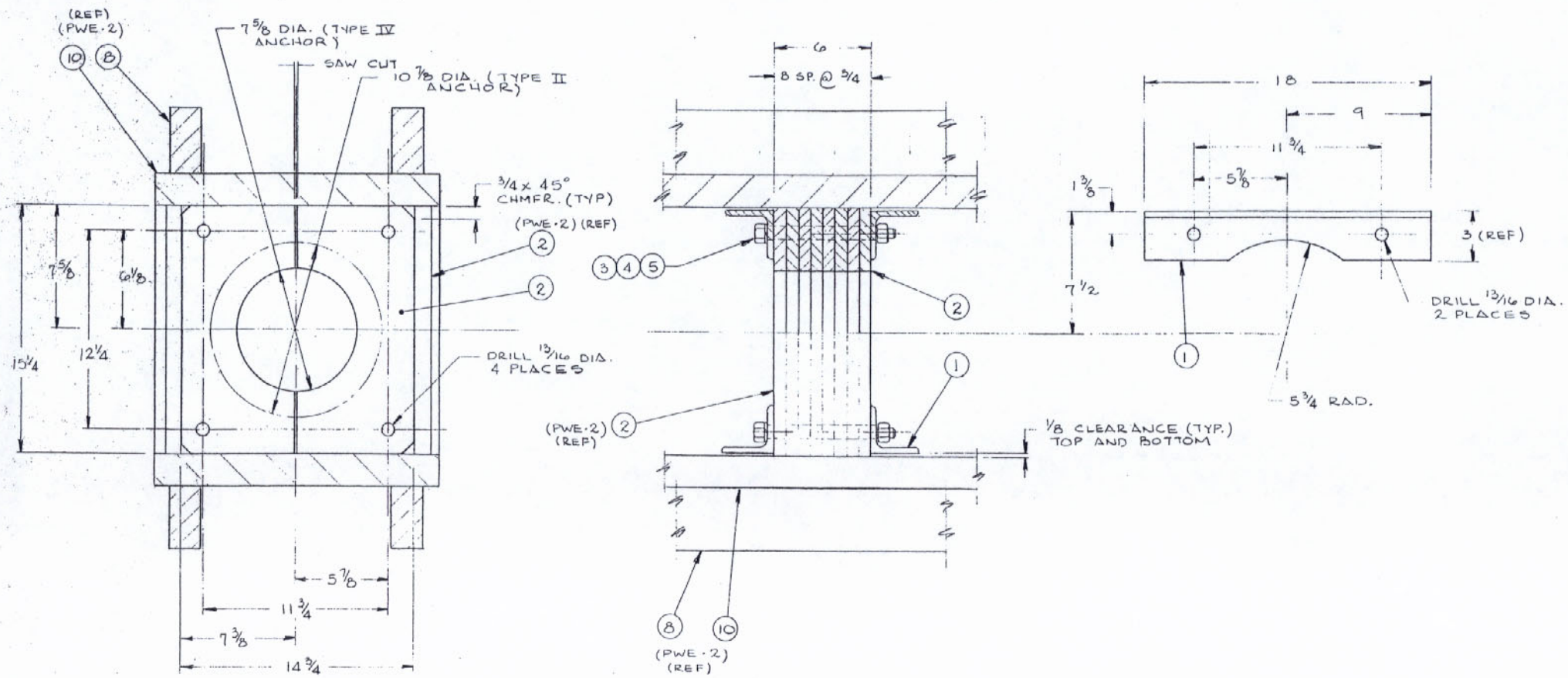

END VIEW

SIDE ELEVATION

By I.V. 4-21-81

APPROVED
FOR SIZE OF MATERIAL AND STRENGTH OF CONNECTIONS
BRIDGE DESIGN SECTION
LOUIS A. GARRIDO BRIDGE DESIGN ENGINEER
By RFB Date MAY 6 1981

MAR 30 1981

RECEIVED APR 7 1981

ITEM No	QTY. REQ'D	MATERIAL	MATERIAL SIZE	SPEC	DESCRIPTION	DRAWING No
5	4	STEEL	3/4 (NOM)		LOCKWASHER	
4	4	STEEL	3/4-10 UNC		HEX. NUT	
3	4	STEEL	3/4-10 UNC x 8 LG.		HEX. HEAD BOLT	
2	8	PLYWOOD	3/4 x 14 3/4 x 15 1/4 LG.	EXTERIOR GR.	SHIM	
1	4	STEEL	∠ 3/8 x 3 x 3 x 18 LG.	A-36	RETAINER ANGLE	

Tolerances UNLESS NOTED:
FRACTION ± 1/16
DECIMAL ± —"—
ANGLE ± .5°

MAT'L WGT OF SIZE	FINISHED WGT.	MAX & MIN HARDNESS
HEAT TREAT	FINISH	NEXT ASSEMBLY

Freyssinet PRESCON

THE PRESCON CORPORATION
8918 TESORO DRIVE
SAN ANTONIO, TEXAS
78217
a freyssinet international company

Disclosure Notice
This drawing is the exclusive property of The Prescon Corporation and the information shown may not be used nor the drawing reproduced without written permission of The Prescon Corporation.

CONTRACTOR
WILLIAMS BROTHERS CONSTRUCTION CO., INC.
IHI INTERNATIONAL, INC.

ENGINEER
FRANKLAND AND LIENHARD – MODJESKI AND MASTERS

PROJECT
MISSISSIPPI RIVER BRIDGE (LULING)
MAIN RIVER CROSSING SUPERSTRUCTURE
ST. CHARLES PARISH

PROJECT NUMBER	STATE
450-37-02 FAP. I-310-4(35)223	LOUISIANA

ANCHOR GUIDE SHIMS

PBX 8001
HOHN
25 JULY 79
REIFFERT
8-31-79
SCALE: 1/4" = 1'

PWE-2A
REV -0-

DATE	REVISION DESCRIPTION	REV NO.

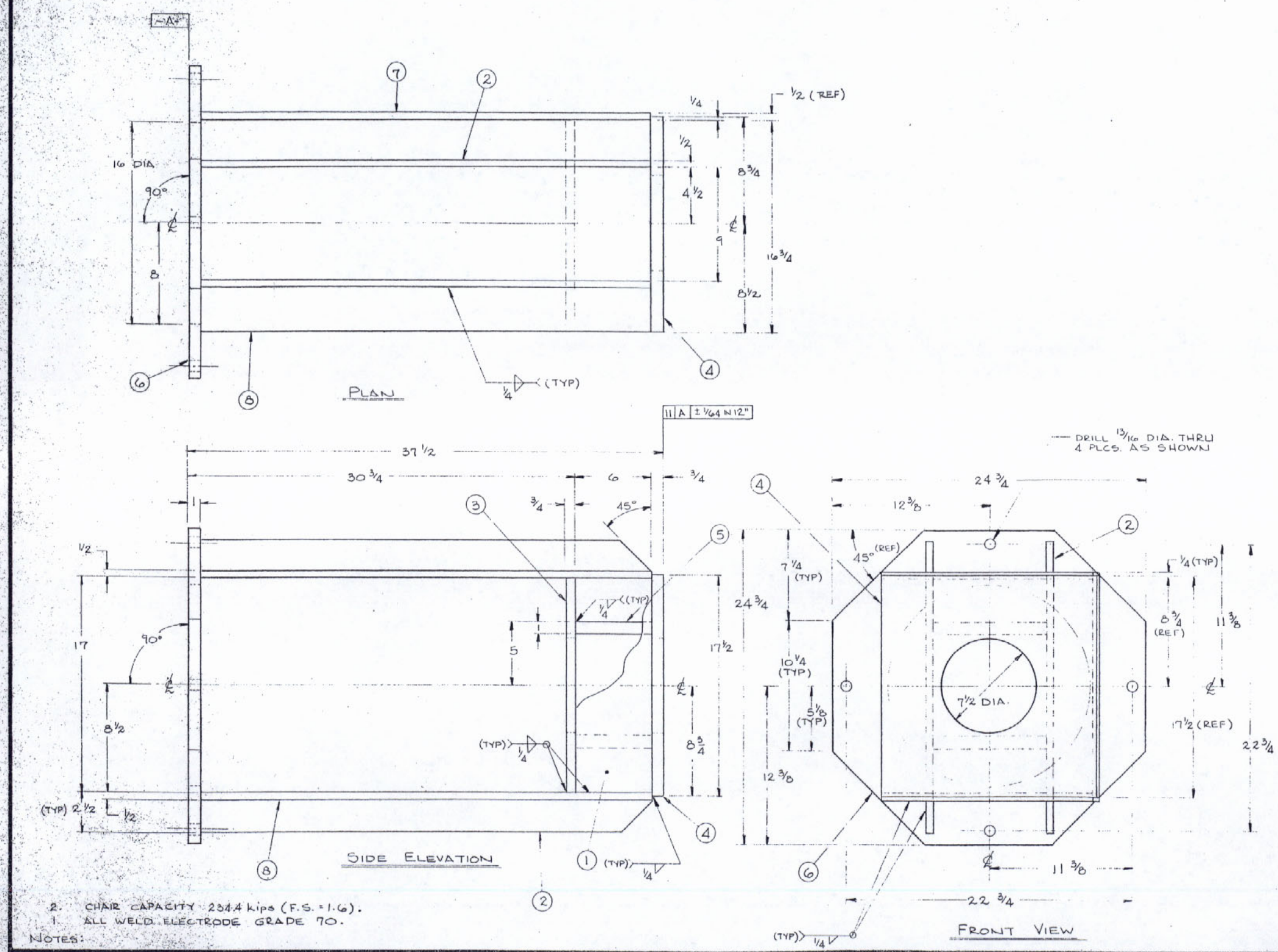

2. CHAIR CAPACITY 234.4 kips (F.S. = 1.6).
1. ALL WELD ELECTRODE GRADE 70.

NOTES:

APPROVED
For Design ...
Frankland & Lienhard
By I.V. 4-21-81

APPROVED
FOR SIZE OF MATERIAL AND STRENGTH OF CONNECTIONS
BRIDGE DESIGN SECTION
LOUIS A. GARRIGO BRIDGE DESIGN ENGINEER
By RFB Date MAY 6 1981

RECEIVED APR 7 1981

MAR 30 1981

ITEM NO.	QTY. REQ'D.	MATERIAL	MATERIAL SIZE	SPEC.	DESCRIPTION	DRAWING NO.
8	2	STEEL PLATE	1/2 PL x 16 3/4 x 35 LG.	A 36	COVER PLATE	
7	1	STEEL PLATE	1/2 PL x 17 1/2 x 35 LG		BACK PLATE	
6	1	STEEL PLATE	1 PL x 24 3/4 x 24 3/4 LG.		BOTTOM PL	
5	2	STEEL PLATE	1 PL x 6 x 9 LG.		SPACER PL	
4	1	STEEL PLATE	3/4 PL x 17 1/4 x 17 1/2 LG.		TOP PLATE	
3	1	STEEL PLATE	3/4 PL x 16 3/4 x 17 1/2 LG.		GUIDE PLATE	
2	4	STEEL PLATE	1/2 PL x 2 1/2 x 35 3/4 LG.		STIFFENER PL	
1	2	STEEL PLATE	1/2 PL x 6 x 17 LG.	A-36	SIDE PLATE	

Tolerances UNLESS NOTED
FRACTION ± 1/16
DECIMAL ± 1/64
ANGLE ± .5°

MAT'L WGT. IN SIZE | FINISHED WGT. APPROX. 299# | MAX & MIN HARDNESS
HEAT TREAT | FINISH 250 | NEXT ASSEMBLY

Freyssinet PRESCON

THE PRESCON CORPORATION
8918 TESORO DRIVE
SAN ANTONIO, TEXAS
78217
a freyssinet international company

Disclosure Notice
This drawing is the exclusive property of The Prescon Corporation and the information shown may not be used nor the drawing reproduced without written permission of The Prescon Corporation.

CONTRACTOR
WILLIAMS BROTHERS CONSTRUCTION CO., INC.
IHI INTERNATIONAL, INC.

ENGINEER
FRANKLAND AND LIENHARD - MODJESKI AND MASTERS

PROJECT
MISSISSIPPI RIVER BRIDGE (LULING)
MAIN RIVER CROSSING SUPERSTRUCTURE
ST. CHARLES PARISH

PROJECT NUMBER	STATE
450-37-02 FAP 1-310-4(35)223	LOUISIANA

STRAND CHAIR WELDMENT (1000 TON)

PBX 8001
HÖHN
16 JULY 79
REIFFERT
8-31-79
SCALE: 1/4" = 1"

PWE 5
REV. C

DATE	REVISION DESCRIPTION	REV NO

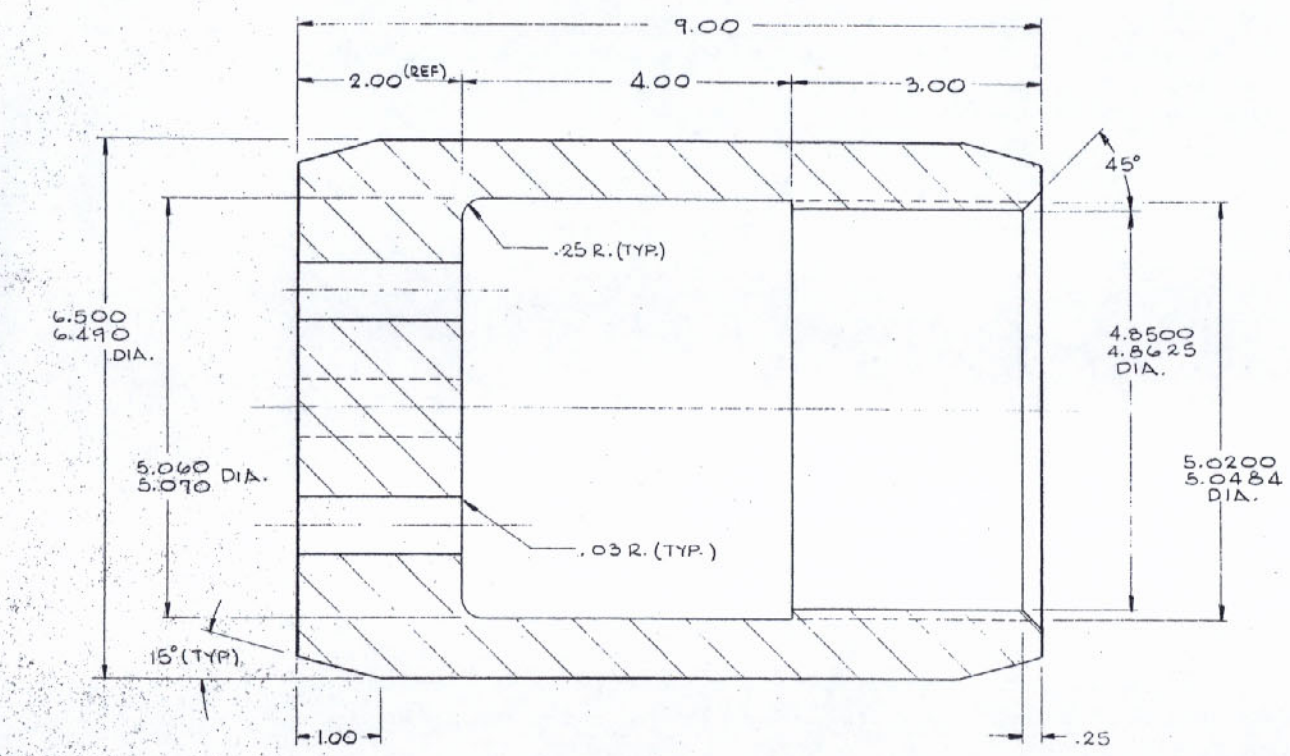

SECTION A-A

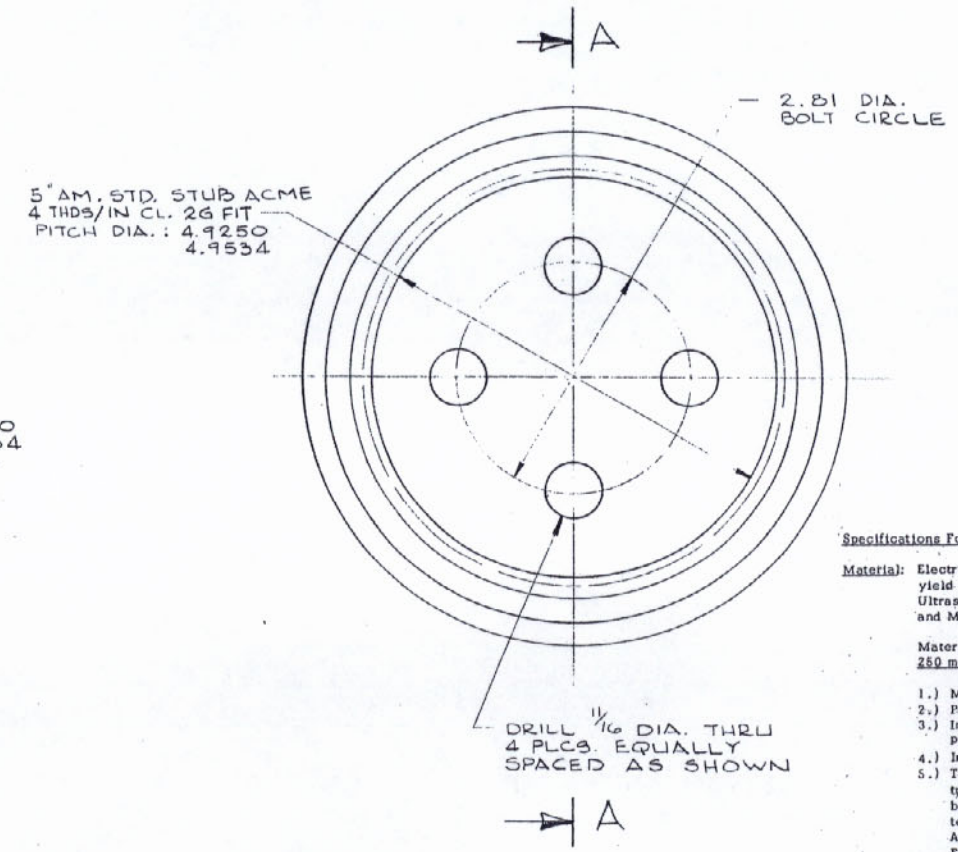

APPROVED
FOR SIZE OF MATERIAL AND
STRENGTH OF CONNECTIONS
BRIDGE DESIGN SECTION
LOUIS A. GARRIDO BRIDGE DESIGN ENGINEER
By RFB Date MAY 6 1981

Specifications For Pull Rods, Nuts and Fittings

Material: Electric Furnace Quality 4340, hardened to 28 to 34 Rc minimum yield 130,000 psi. Material to be capable of meeting Ultrasonic Inspection MIL-I-8950 Class A prior to machining and Magnetic Particle Inspection MIL-I-6868 after machining.

Material must be free of scale, prior to sonic, and exhibit a 250 microfinish or better, on entire surface to be soniced.

1.) Machine as per drawing
2.) Polish to a surface finish of 32 rms.
3.) Inspect for straightness of rod, Max. Deviation .025" per 12.0"
4.) Inspect surface finish.
5.) Test Coupons: 3 charpy "V" notch longitudinal (with notch transverse) tests at 15 ft. lbs. Charpy "V" notch material shall be stamped to correspond with material used. 2 longitudinal tensile tests at half radius. Hardness tests across diameter. All tests at room temperature and according to ASTM A370, E18, E23. Charpy at 0°F.
6.) Thread Inspection: Including lead accuracy and thread form as shown.
7.) Thoroughly clean by vapor degreasing with Trichlorethylene and dry.
8.) Apply Drylube 1A all over.

The following documentation is required:
Certification of inspection for
a). Surface finish
b). Ultrasonic testing
c). Magnetic particle testing.
d). Thread inspection

... And

a). Charpy test results
b). Yield strength
c). Tensile strength
d). Elongation @ rupture
f). Hardness readings

Notes: Remove all burrs and break sharp edges.

APPROVED
For Design, [illegible]
Frankland & Lienhard
By I.V. 4-21-81

MAR 30 1981
RECEIVED
APR 7 1981

ITEM NO	QTY REQD	MATERIAL	MATERIAL SIZE	SPEC	DESCRIPTION	DRAWING NO
1	2	STEEL	6 1/2 DIA x 9 LG	SEE NOTES	PULL ROD STRAND ADAPTER	

Tolerances: UNLESS NOTED FRACTION ± 1/16 .XXX ± .010 DECIMAL ± .030 ANGLE ± .5	MAT'L WGT BY SIZE	FINISHED WGT APPROX 46#	MAX & MIN HARDNESS			
	HEAT TREAT	FINISH 125	HEAT ASSEMBLY			

Freyssinet PRESCON

THE PRESCON CORPORATION
8918 TESORO DRIVE
SAN ANTONIO, TEXAS
78217
a freyssinet international company

Disclosure Notice
This drawing is the exclusive property of The Prescon Corporation and the information shown may not be used nor the drawing reproduced without written permission of The Prescon Corporation

CONTRACTOR
WILLIAMS BROTHERS CONSTRUCTION CO., INC.
IHI INTERNATIONAL, INC.

ENGINEER
FRANKLAND AND LIENHARD – MODJESKI AND MASTERS

PROJECT
MISSISSIPPI RIVER BRIDGE (LULING)
MAIN RIVER CROSSING SUPERSTRUCTURE
ST. CHARLES PARISH

PROJECT NUMBER	STATE
450-37-02 FAP 1-310-4(35)223	LOUISIANA

PULL ROD STRAND ADAPTER
(1000 TON)

PBX 8001
HOHN
19 JULY 79
REIFFERT
8-31-79
SCALE: FULL

PWE
6
REV. B

DATE	REVISION DESCRIPTION	REV. NO.

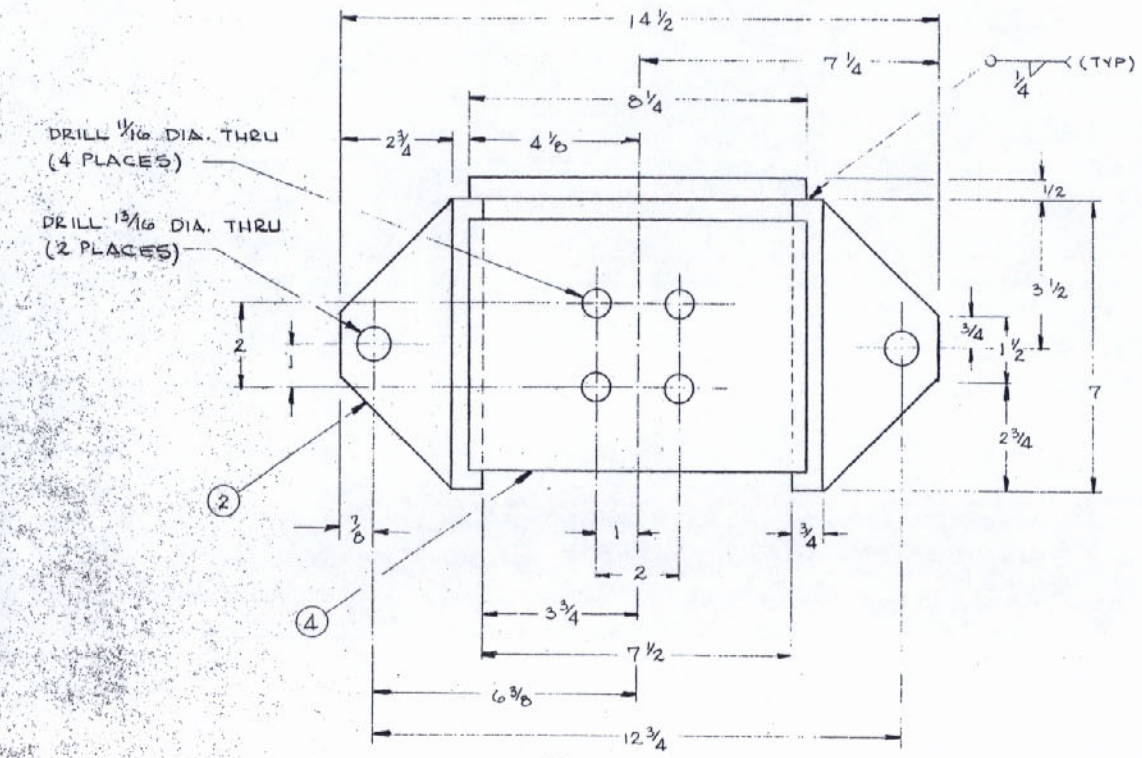

PLAN VIEW

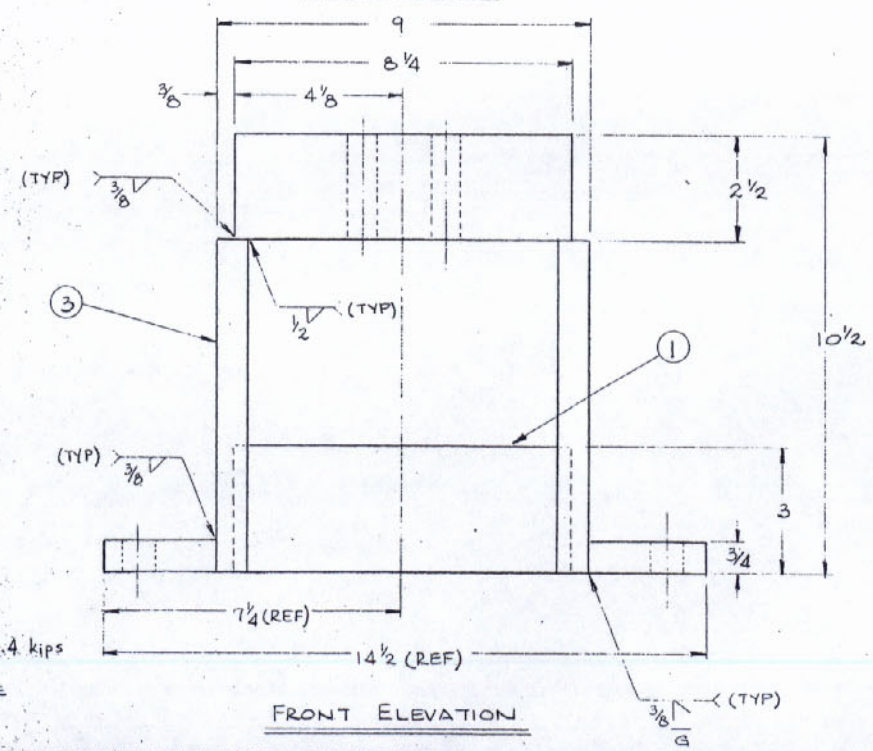

FRONT ELEVATION

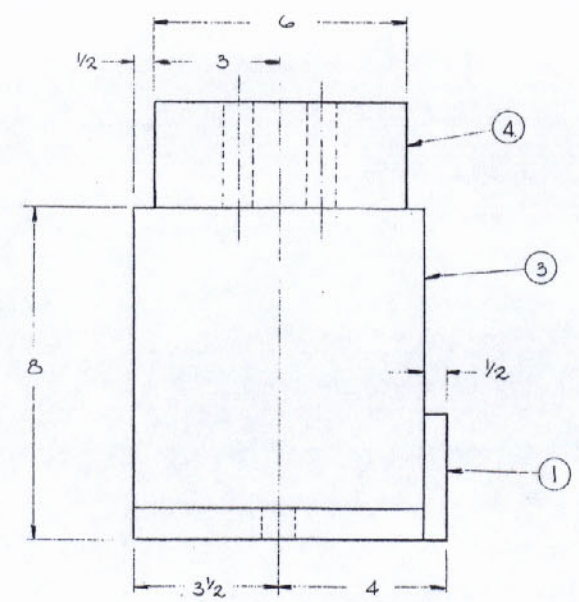

SIDE ELEVATION

2. CHAIR CAPACITY = 234.4 kips (F.S. = 1.60).
1. ALL WELD ELECTRODE GRADE 70.

NOTES:

APPROVED
For Design ... Dip
Frankland & Lienhard
By I.V. 4-21-81

APPROVED
FOR SIZE OF MATERIAL AND STRENGTH OF CONNECTIONS
BRIDGE DESIGN SECTION
LOUIS A. CARRIGO BRIDGE DESIGN ENGINEER
By RFB Date MAY 6 1981

RECEIVED
APR 7 1981
MAR 30 1981

ITEM NO.	QTY. REQ'D	MATERIAL	MATERIAL SIZE	SPEC.	DESCRIPTION	DRAWING No.
4	1	STEEL PLATE	2 1/2 PL x 6 x 8 1/4 LG	A-36	TOP PL	
3	2	STEEL PLATE	3/4 PL x 7 x 8 LG	A-36	SIDE PL	
2	2	STEEL PLATE	3/4 PL x 2 3/4 x 7 LG.	A-36	LIFTING PL	
1	1	STEEL PLATE	1/2 PL x 3 x x 8 1/4 LG	A-36	BACK PL	

Tolerances: UNLESS NOTED FRACTION: 1/16 DECIMAL: ANGLE: .5°
MAT'L WT. SIZE
FINISHED WT. APPROX. 682#
MAX & MIN HARDNESS
HEAT TREAT
FINISH 250
NEXT ASSEMBLY

Freyssinet PRESCON

THE PRESCON CORPORATION
8918 TESORO DRIVE
SAN ANTONIO, TEXAS
78217
a Freyssinet international company

Disclosure Notice: This drawing is the exclusive property of the Prescon Corporation and the information shown may not be used nor the drawing reproduced without written permission of The Prescon Corporation.

CONTRACTOR: WILLIAMS BROTHERS CONSTRUCTION CO., INC. IHI INTERNATIONAL, INC.

ENGINEER: FRANKLAND AND LIENHARD – MODJESKI AND MASTERS

PROJECT: MISSISSIPPI RIVER BRIDGE (LULING) MAIN RIVER CROSSING SUPERSTRUCTURE ST. CHARLES PARISH

PROJECT NUMBER	STATE
450-37-02 FAP 1-310-4(35)223	LOUISIANA

RAM CHUCK ADAPTER WELDMENT FOR .6 DIA. STRAND (1000 TON)

PBX 8001
HOHN
15 JULY 79
REIFFERT
8-31-79
SCALE: 1/2" = 1"

PWE 7
REV. D

DATE	REVISION DESCRIPTION	REV NO.

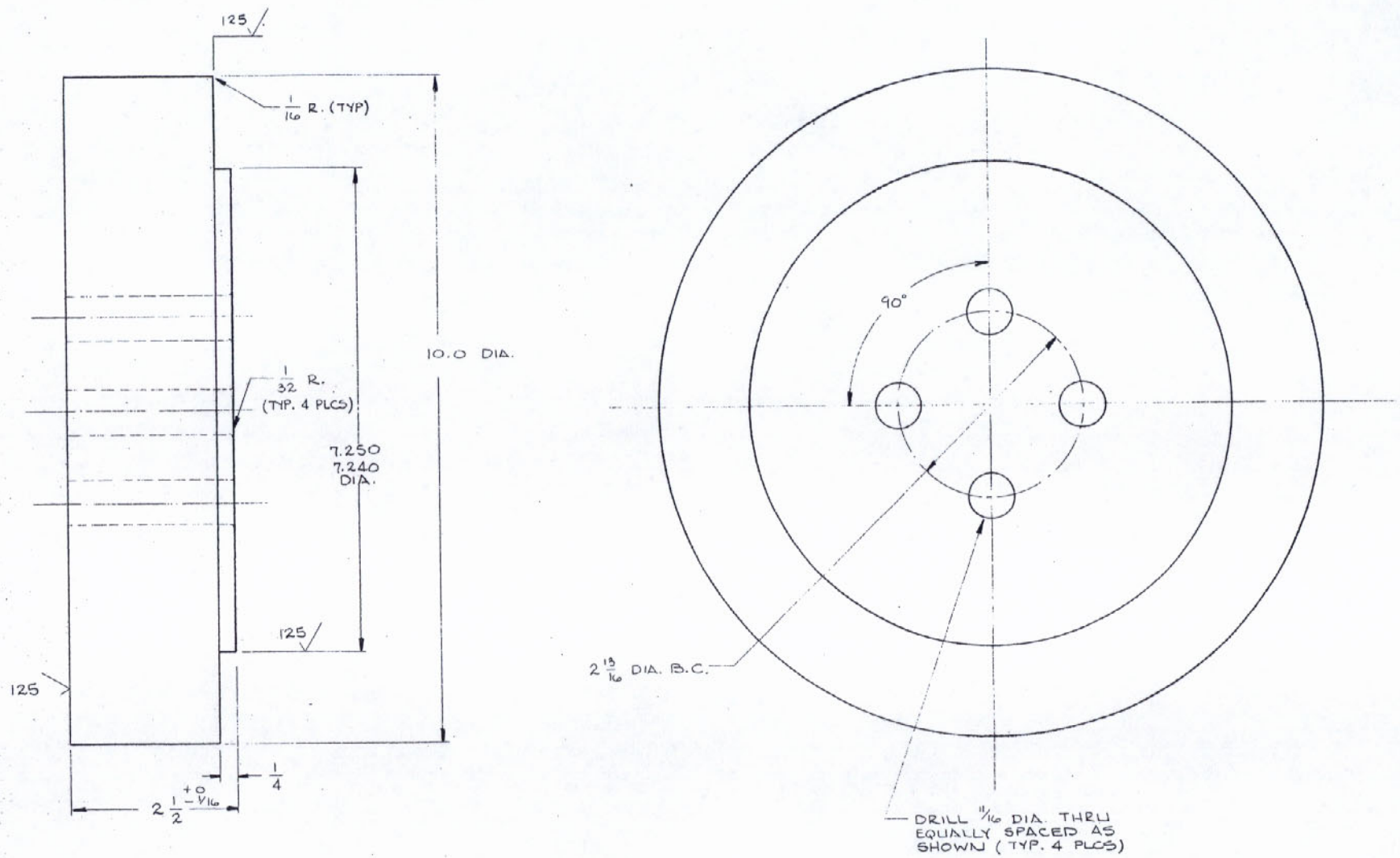

APPROVED
For Design, Materials & Workmanship

Frankland & Lienhard
By I.V. 4-21-81

APPROVED
FOR SIZE OF MATERIAL AND STRENGTH OF CONNECTIONS
BRIDGE DESIGN SECTION
LOUIS A. GRIMMER BRIDGE DESIGN ENGINEER
By REB Date MAY 6 1981

MAR 30 1981

RECEIVED APR 7 1981

ITEM NO.	QTY REQD.	MATERIAL	MATERIAL SIZE	SPEC.	DESCRIPTION	DRAWING NO.
1	2	PLATE	10 DIA. X 2 1/2 THK	AISI C. 1045	OUTER CHUCK PLATE	

Tolerances UNLESS NOTED
FRACTION ± 1/16
XXX ± .010
XX ± .030
ANGLE ± 5°

MATL. WT. PER — FINISHED WT. APPROX. 52 — MAX. WT. ALLOWED
HEAT TREAT — FINISH 250 — HEAT ENERGY

Freyssinet PRESCON

THE PRESCON CORPORATION
8918 TESORO DRIVE
SAN ANTONIO, TEXAS
78217
a freyssinet international company

Disclosure Notice
This drawing is the exclusive property of The Prescon Corporation and the information shown may not be used nor the drawing reproduced without written permission of The Prescon Corporation.

CONTRACTOR
WILLIAMS BROTHERS CONSTRUCTION CO., INC.
IHI INTERNATIONAL, INC.

ENGINEER
FRANKLAND AND LIENHARD – MODJESKI AND MASTERS

PROJECT
MISSISSIPPI RIVER BRIDGE (LULING)
MAIN RIVER CROSSING SUPERSTRUCTURE
ST. CHARLES PARISH

PROJECT NUMBER	STATE
450-37-02 FAP. J-310-4(35)223	LOUISIANA

OUTER CHUCK PLATE
(1000 TON)

PBX 8001
DRAWN BY HBHN
DATE 19 JUN 79
DESIGNED BY PEIFFERT
DATE 8-31-79
SCALE: FULL

PWE-8
REV.-0-

DATE	REVISION DESCRIPTION	REV NO

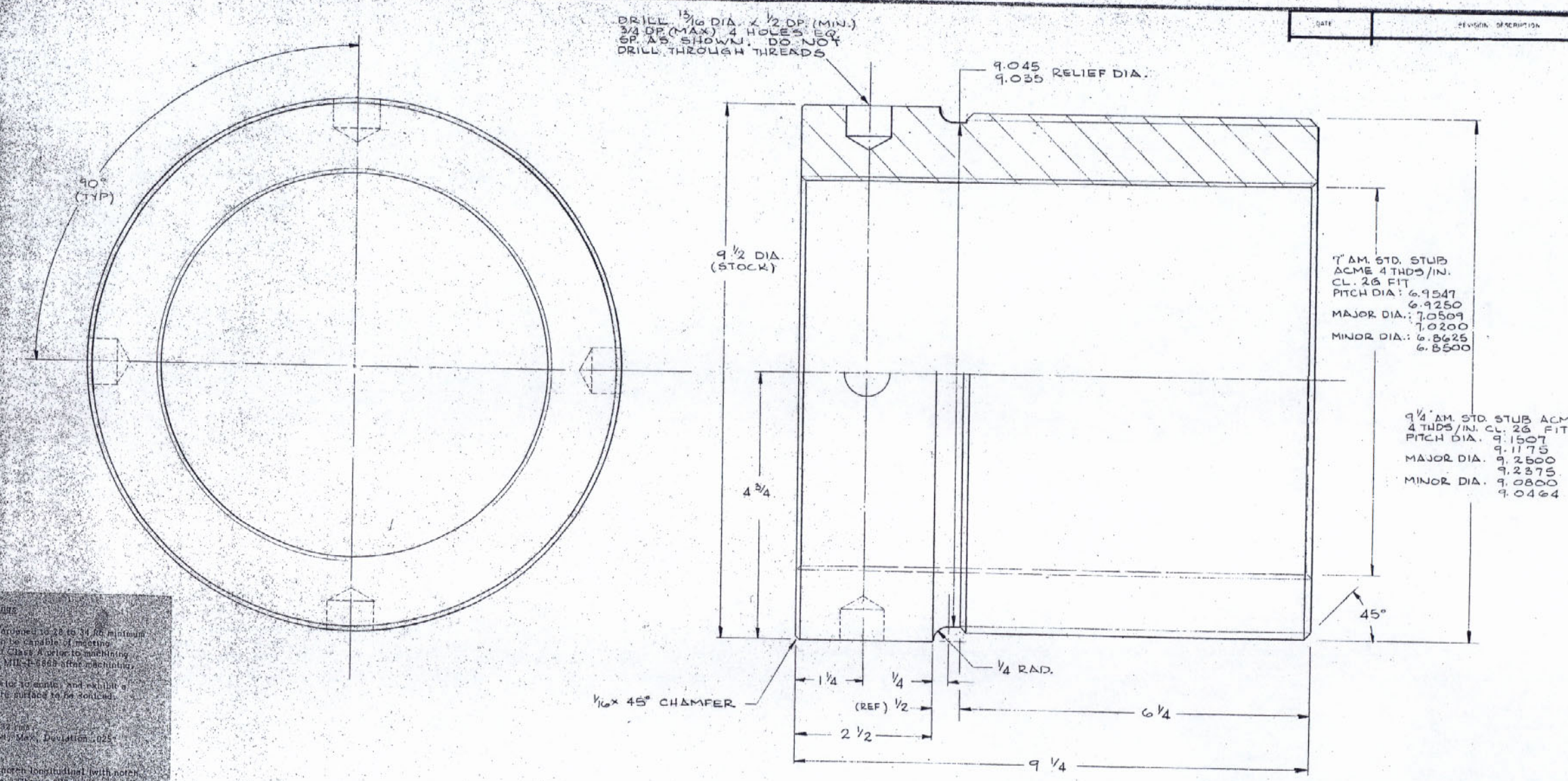

Specification — Pole Sockets, Wire Rope Fittings

Material: Electric furnace Quality 4340, Normalized to 28 to 34 Rc minimum yield 130,000 psi min. Material to be capable of meeting Ultrasonic Inspection MIL-I-24217 Class A prior to machining and Magnetic Particle Inspection MIL-I-6868 after machining.

Material must be free of angles, voids, scale, and exhibit a 250 microinch or better, on entire surface to be coated.

1.) Machine as per drawing.
2.) Finish to a surface finish of 32 rms.
3.) Inspect for conformance of rough Max. Deviation .025" per 12 in.
4.) Shaded surface finish.
5.) Test Coupons: 1 Charpy V. notch longitudinal (with notch transverse) tests at 10 ft. lbs., 1 Charpy V. notch material shall be stamped to correspond with material used, 2 longitudinal tensile bars of half gauge, Hardness tests across diameter. All tests at room temperature and according to ASTM A370, E18, E23. Carry at 7.
6.) Thread Inspection: including lead accuracy and thread form as shown.
7.) Thoroughly clean by vapor degreasing with Trichlorethylene and dry.
8.) Apply Dytube 12, all over.

The following documentation is required:
Certification of inspection for:

a). Surface finish
b). Ultrasonic testing
c). Magnetic particle testing.
d). Thread inspection

And:

a). Charpy test results
b). Yield strength
c). Tensile strength
d). Elongation & reduce
e). Hardness readings

Notes: Remove all burrs and break sharp edges.

APPROVED
FOR SIZE OF MATERIAL AND STRENGTH OF CONNECTIONS
BRIDGE DESIGN SECTION
LOUIS A. CARDINO BRIDGE DESIGN ENGINEER
By RFB Date MAY 6 1981

APPROVED
For Design, Material & Workmanship
Frankland & Lienhard
By I.V. 4-21-81

THIS BUSHING IS USED WITH CABLES I AND VI.

MAR 30 1981

RECEIVED APR 7 1981

ITEM No	QTY. REQ'D	MATERIAL	MATERIAL SIZE	SPEC	DESCRIPTION	DRAWING No
1		STEEL	9 1/2 DIA X 9 1/4 LG	SEE NOTES	TYPE I BUSHING	

Tolerances UNLESS NOTED: FRACTION ± 1/16, .XXX ± .010, DECIMAL ± .XX ± .030

MAT'L WT. BY SIZE | FINISHED WT. APPROX. | MAX & MIN HARDNESS | HEAT TREAT | FINISH | NEXT ASSEMBLY

Freyssinet

THE PRESCON CORPORATION
8918 TESORO DRIVE
SAN ANTONIO, TEXAS
78217

Disclosure Notice: This drawing is the exclusive property of The Prescon Corporation and the information shown may not be used nor the drawing reproduced

CONTRACTOR: WILLIAMS BROTHERS CONSTRUCTION CO., INC. IHI INTERNATIONAL, INC.

ENGINEER

PROJECT: MISSISSIPPI RIVER BRIDGE (LULING) MAIN RIVER CROSSING SUPERSTRUCTURE ST. CHARLES PARISH

TYPE I - BUSHING

PBX 8001 HÖHN

DI. / E.

DATE	REVISION DESCRIPTION	REV NO.

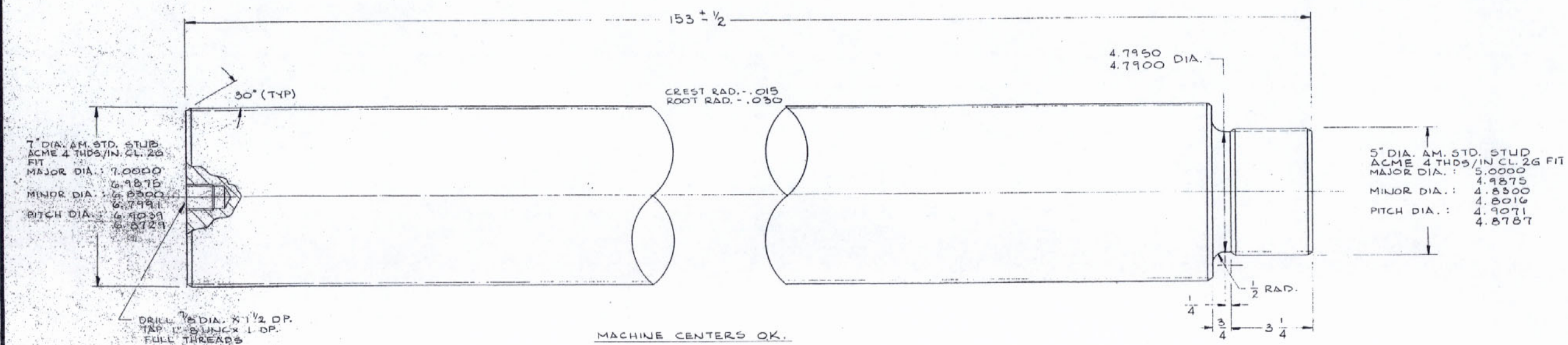

MACHINE CENTERS OK.

Specifications For Pull Rods, Nuts and Fittings

Material: Electric Furnace Quality 4340, hardened to 28 to 34 Rc minimum yield 130,000 psi. Material to be capable of meeting Ultrasonic Inspection MIL-I-8950 Class A prior to machining and Magnetic Particle Inspection MIL-I-6868 after machining.

Material must be free of scale, prior to sonic, and exhibit a 250 microfinish or better, on entire surface to be sonicated.

1.) Machine as per drawing.
2.) Polish to a surface finish of 32 rms.
3.) Inspect for straightness of rod, Max. Deviation .025" per 12.0".
4.) Inspect surface finish.
5.) Test Coupons: 3-charpy "V" notch longitudinal (with notch transverse) tests at 15 ft. lbs. Charpy "V" notch material shall be stamped to correspond with material used. 2 longitudinal tensile tests at half radius. Hardness tests across diameter. All tests at room temperature and according to ASTM A370, E18, E23. Charpy at 0°F.
6.) Thread Inspection: Including lead accuracy and thread form as shown.
7.) Thoroughly clean by vapor degreasing with Trichlorethylene and dry.
8.) Apply Drylube 1A all over.

The following documentation is required:
Certification of inspection for
a). Surface finish
b). Ultrasonic testing
c). Magnetic particle testing.
d). Thread inspection

... And
a). Charpy test results
b). Yield strength
c). Tensile strength
d). Elongation @ rupture
f). Hardness readings

Notes: Remove all burrs and break sharp edges.

APPROVED
For Design, [illegible] Ownership
Frankland & Lienhard
By I.V. 4-21-81

APPROVED
FOR SIZE OF MATERIAL AND
STRENGTH OF CONNECTIONS
BRIDGE DESIGN SECTION
LOUIS A. GARRIDO BRIDGE DESIGN ENGINEER
By REB Date MAR 30 1981

RECEIVED APR 7 1981

ITEM No.	QTY. REQ'D.	MATERIAL	MATERIAL SIZE	SPEC.	DESCRIPTION	DRAWING No.
1	1	STEEL	7 DIA. x 153 LG.	SEE NOTES	PULL ROD	

Tolerances UNLESS NOTED
FRACTION ± 1/16
.XXX ± .010
DECIMAL ± .XX ± .030
ANGLE ± 5°

MAT'L WT. OF SIZE | FINISHED WT. APPROX. 1646# | MAX. & MIN HARDNESS
HEAT TREAT | FINISH 125 | NEXT ASSEMBLY

Freyssinet PRESCON

THE PRESCON CORPORATION
8918 TESORO DRIVE
SAN ANTONIO, TEXAS
78217
a Freyssinet international company

Disclosure Notice
This drawing is the exclusive property of The Prescon Corporation and the information shown may not be used nor the drawing reproduced without written permission of The Prescon Corporation.

CONTRACTOR
WILLIAMS BROTHERS CONSTRUCTION CO., INC.
IHI INTERNATIONAL, INC.

ENGINEER
FRANKLAND AND LIENHARD – MODJESKI AND MASTERS

PROJECT
MISSISSIPPI RIVER BRIDGE (LULING)
MAIN RIVER CROSSING SUPERSTRUCTURE
ST. CHARLES PARISH

PROJECT NUMBER	STATE
450-37-02 FAP 1-310-4(35)223	LOUISIANA

7" DIA. PULL ROD

PBX 8001
HÖHN
20 JULY 79
REIFFERT
8-31-79
SCALE: 1/2" = 1"

PWE-10
REV. A

DATE	REVISION DESCRIPTION	REV NO

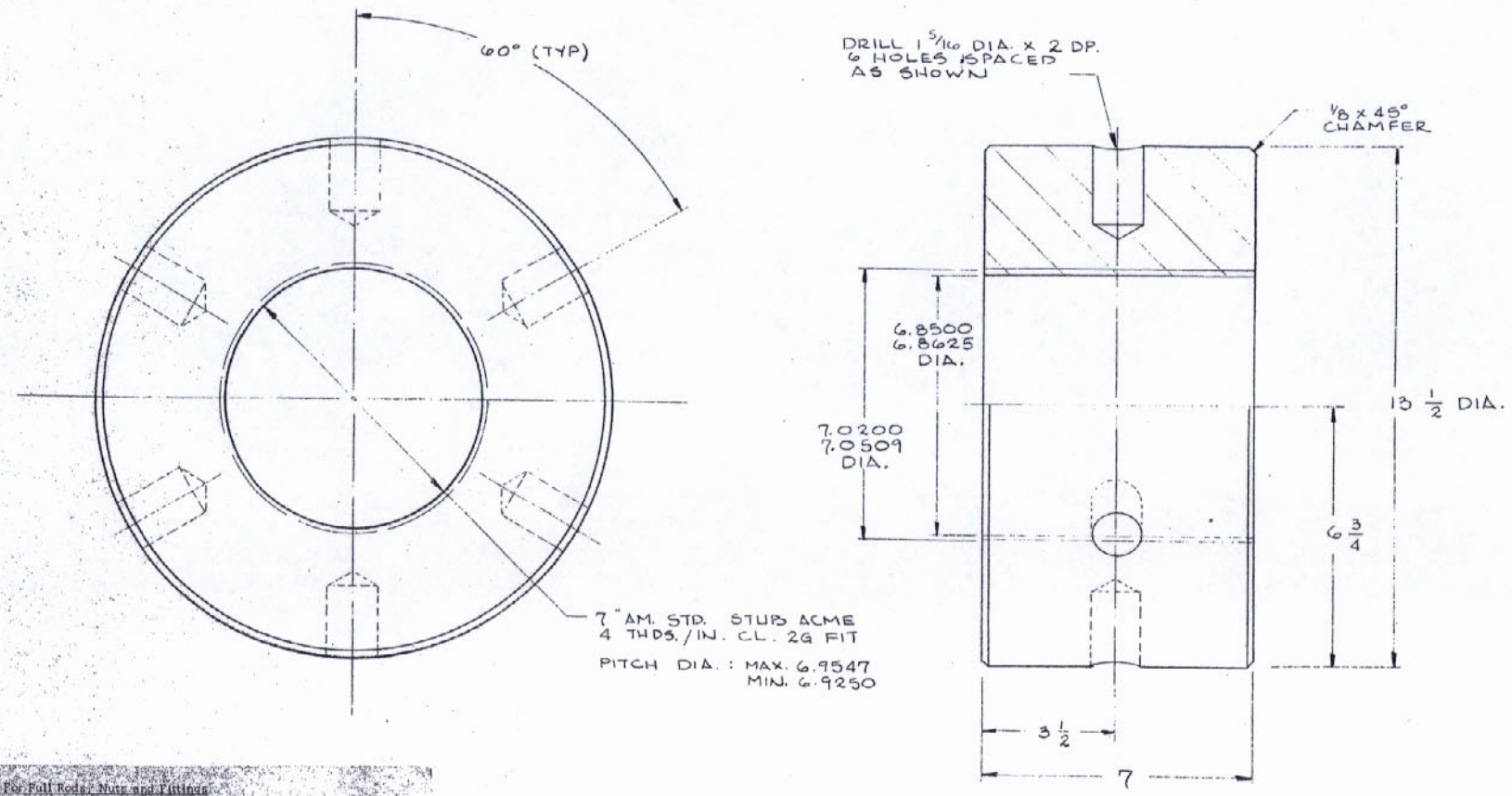

Specifications For Pull Rods, Nuts and Fittings:

Material: Electric Furnace Quality 4340, hardened to 28 to 34 Rc minimum yield 130,000 psi. Material to be capable of meeting Ultrasonic Inspection MIL-I-8950 Class A prior to machining and Magnetic Particle Inspection MIL-I-6868 after machining.

Material must be free of scale, prior to sonic, and exhibit a 250 microinches or better, on entire surface to be sonicated.

1.) Machine as per drawing.
2.) Polish to a surface finish of 32 rms.
3.) Inspect for straightness of rod. Max. Deviation .025" per 12.0".
4.) Blpost surface finish.
5.) Test Coupons: 9 Charpy "V" notch longitudinal (with notch transverse) tests at 15 ft. lbs. Charpy "V" notch material shall be changed to correspond with material used. 2 longitudinal tensile tests w/ half round, hardness than across diameter. All tests at room temperature and according to ASTM A370, E18, E23. Charpy at 0°F.
6.) Thread Inspection: Including lead accuracy and thread form as shown.
7.) Thoroughly clean by vapor degreasing with trichlorethylene and dry.
8.) Apply Dykuble 1A all over.

The following documentation is required:
Certification of inspection re:

a). Surface finish
b). Ultrasonic testing
c). Magnetic particle testing
d). Thread inspection

and

a). Charpy test results
b). Yield strength
c). Tensile strength
d). Elongation @ rupture
f). Hardness readings

Notes: Remove all burrs and break sharp edges.

APPROVED
for Design, Maintenance Assembly
Franklin [illegible] Bridge
By I.V. 4-21-81

APPROVED
FOR SIZE OF MATERIAL AND
STRENGTH OF CONNECTIONS
BRIDGE DESIGN SECTION
LOUIS A. GARRIDO BRIDGE DESIGN ENGINEER
By REB Date MAY 6 1981

RECEIVED
APR 7 1981
RECEIVED
MAR 30 1981

ITEM NO.	QTY REQ'D.	MATERIAL	MATERIAL SIZE	SPEC	DESCRIPTION	DRAWING NO.
1		STEEL	13½" DIA x 7" THK.	SEE NOTES	7" NUT	

Tolerances UNLESS NOTED
FRACTION ± 1/16
.XXX ± .010
.XX ± .030
ANGLE ± 5°

HOLE, NOT SIZE | FINISHED WEIGHT APPROX. | MAX & MIN HARDNESS
HEAT TREAT | FINISH 250√ | HEAT ASSEMBLY

Freyssinet PRESCON

THE PRESCON CORPORATION
8918 TESORO DRIVE
SAN ANTONIO, TEXAS
78217
a freyssinet international company

This drawing is the exclusive property of the Prescon Corporation and the information shown must not be used nor the drawing reproduced without written permission of the Prescon Corporation.

CONTRACTOR
WILLIAMS BROTHERS CONSTRUCTION CO., INC.
IHI INTERNATIONAL, INC.

ENGINEER
FRANKLAND AND LIENHARD – MODJESKI AND MASTERS

MISSISSIPPI RIVER BRIDGE (LULING)
MAIN RIVER CROSSING SUPERSTRUCTURE
ST. CHARLES PARISH

PROJECT NUMBER	STATE
450-37-02 FAP 1-310-4(35)223	LOUISIANA

7" NUT

PBX 6301
HOHN 19 JULY 79
REIFFERT 8-31-79

PWE-11

DATE	REVISION DESCRIPTION	REV NO.

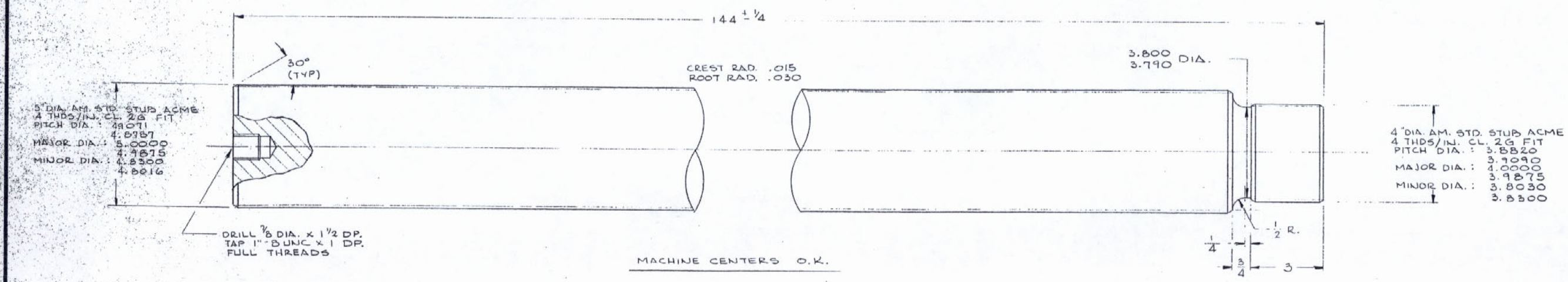

MACHINE CENTERS O.K.

Specifications For Pull Rods, Nuts and Fittings

Material: Electric Furnace Quality 4340, hardened to 28 to 34 Rc minimum yield 130,000 psi. Material to be capable of meeting Ultrasonic Inspection MIL-I-8950 Class A prior to machining and Magnetic Particle Inspection MIL-I-6868 after machining.

Material must be free of scale, prior to sonic, and exhibit a 250 microfinish or better, on entire surface to be soniced.

1.) Machine as per drawing.
2.) Polish to a surface finish of 32 rms.
3.) Inspect for straightness of rod. Max. Deviation .025" per 12.0".
4.) Inspect surface finish.
5.) Test Coupons: 1 Charpy "V" notch longitudinal (with notch transverse) tests at 1/4 ft. lbs. Charpy "V" notch material shall be stamped to correspond with material used. 2 longitudinal tensile tests at half radius. Hardness tests across diameter. All tests at room temperature and according to ASTM A370, E18, E23. Charpy at 0°F.
6.) Thread Inspection: Including lead accuracy and thread form as shown.
7.) Thoroughly clean by vapor degreasing with Trichlorethylene and dry.
8.) Apply Drylube TA all over.

The following documentation is required:
Certification of inspection for:
a). Surface finish
b). Ultrasonic testing
c). Magnetic particle testing.
d). Thread inspection

And
a). Charpy test results
b). Yield strength
c). Tensile strength
d). Elongation @ rupture
f). Hardness readings

Notes: Remove all burrs and break sharp edges.

APPROVED
FOR SIZE OF MATERIAL AND STRENGTH OF CONNECTIONS
BRIDGE DESIGN SECTION
LOUIS A. GARRIDO BRIDGE DESIGN ENGINEER
By RFB Date MAY 6 1981

Frankland ... By I.V. 4-21-81

RECEIVED APR 7 1981

MAR 30 1981

ITEM No.	QTY. REQ'D.	MATERIAL	MATERIAL SIZE	SPEC.	DESCRIPTION	DRAWING No.
1		STEEL	5" DIA. x 144" LG	SEE NOTES	5" PULL ROD	

Tolerances UNLESS NOTED: FRACTION ± 1/16, .XXX ± .010, DECIMAL ± .XX ± .030, ANGLE ± 5°

MAT'L WGT. IN SIZE | FINISHED WGT. APPROX. 795# | MAX & MIN HARDNESS | HEAT TREAT | FINISH 125 | NEXT ASSEMBLY

Freyssinet PRESCON

THE PRESCON CORPORATION
8918 TESORO DRIVE
SAN ANTONIO, TEXAS
78217
a freyssinet international company

Disclosure Notice: This drawing is the exclusive property of The Prescon Corporation and the information shown may not be used nor the drawing reproduced without written permission of The Prescon Corporation.

CONTRACTOR: WILLIAMS BROTHERS CONSTRUCTION CO., INC. IHI INTERNATIONAL, INC.

ENGINEER: FRANKLAND AND LIENHARD - MODJESKI AND MASTERS

PROJECT: MISSISSIPPI RIVER BRIDGE (LULING) MAIN RIVER CROSSING SUPERSTRUCTURE ST. CHARLES PARISH

PROJECT NUMBER	STATE
450-37-02 FAP I-310-4(35)223	LOUISIANA

5" DIA. PULL ROD

PBX 8001
HÖHN
20 JULY 79
REIFFERT
8-31-79
SCALE: 1/2" = 1

PWE-13
REV. A

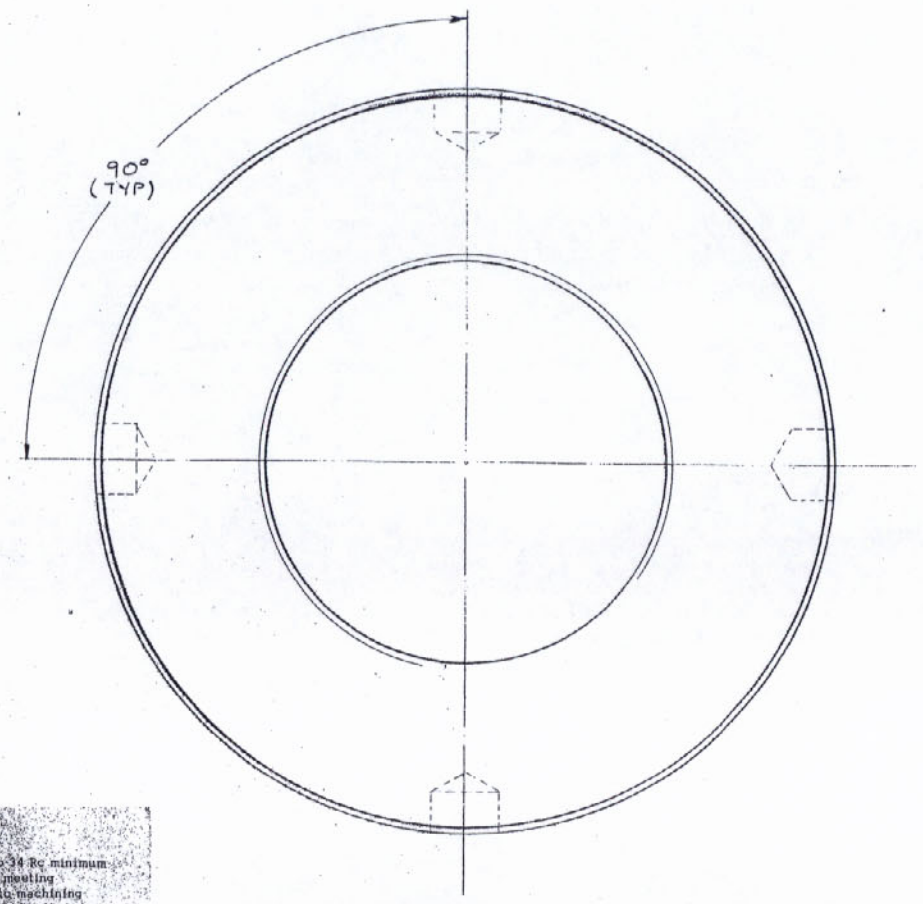

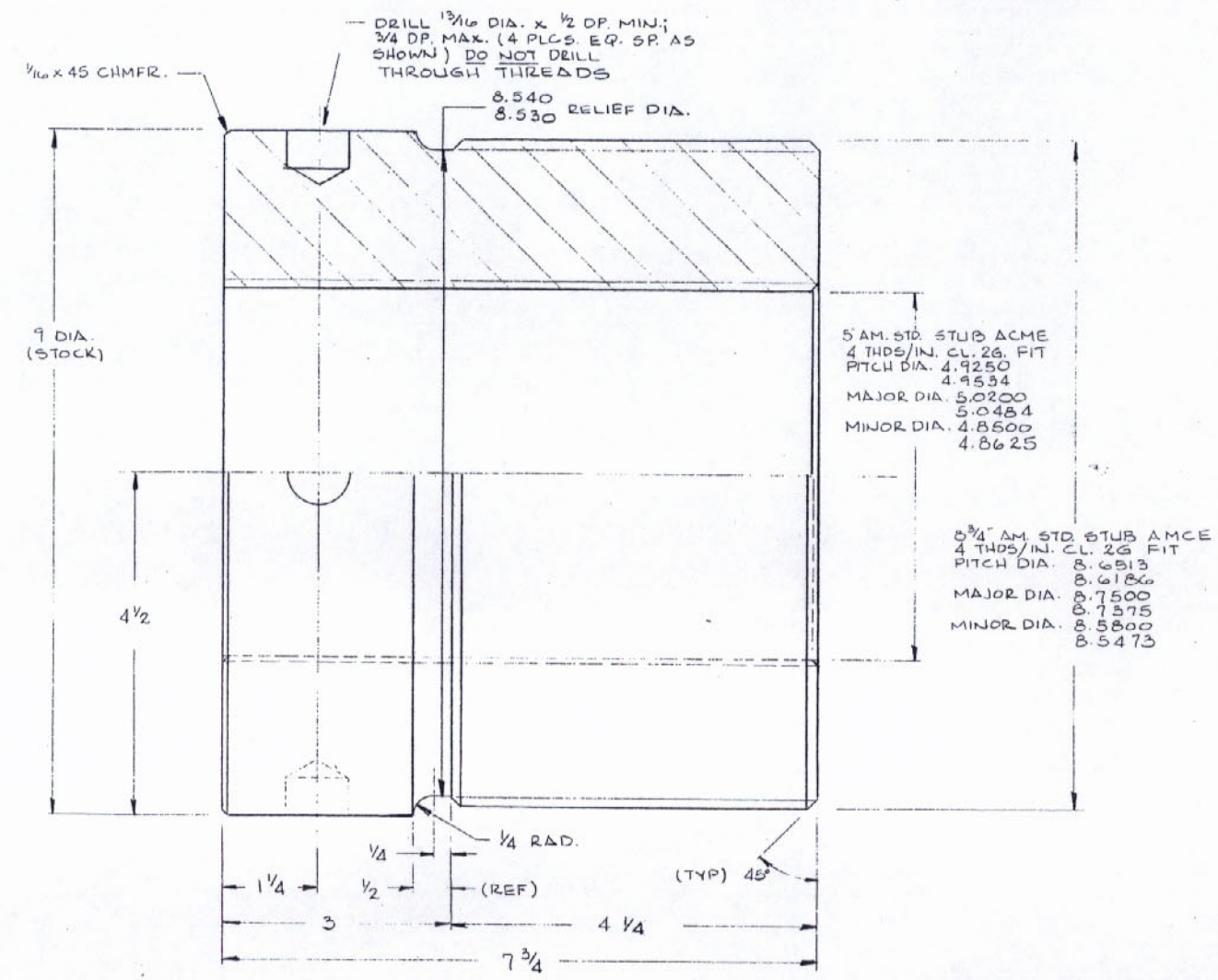

Specifications for Pull Rods, Nuts and Fittings

Material: Electric Furnace Quality 4340, hardened to 28 to 34 Rc minimum yield 130,000 psi. Material to be capable of meeting Ultrasonic Inspection MIL-I-8950 Class A prior to machining and Magnetic Particle Inspection MIL-I-6868 after machining.

Material must be free of scale, prior to conin, and exhibit a 250 micro finish or better, on entire surface to be conicled.

1.) Machine as per drawing.
2.) Polish to a surface finish of 32 rms.
3.) Inspect for straightness (rod). Max. Deviation .025" per 12.0"
4.) Inspect surface finish.
5.) Test Coupons: 1 Charpy "V" notch longitudinal (with notch transversal tests at 1/4 R. 1/2 R. Charpy "V" notch material shall be stamped to correspond with material used. 2 longitudinal tensile tests at half radius. Hardness tests across diameter. All tests at room temperature and according to ASTM A370, 818; 833, Charpy QLCD.
6.) Thread Inspection: Including lead accuracy and thread form as shown.
7.) Thoroughly clean by vapor degreasing with Trichlorethylene and dry.
8.) Apply Drylube 1A all over.

The following documentation is required:
Certification of Inspection for

a). Surface finish
b). Ultrasonic testing
c). Magnetic particle testing
d). thread inspection

And

a). Charpy test results
b). Yield strength
c). Tensile strength
d). Elongation @ rupture
e). Hardness readings

Notes: Remove all burrs and break sharp edges.

APPROVED
for Bridge Design
Franklin & Lienhard
By I.V. 4-21-81

APPROVED
FOR SIZE OF MATERIAL AND STRENGTH OF CONNECTIONS
BRIDGE DESIGN SECTION
LOUISIANA DEPT. OF HIGHWAYS BRIDGE DESIGN ENGINEER
By RFB Date MAY 6 1981

RECEIVED
APR 7 1981

RECEIVED
MAR 30 1981

THIS BUSHING IS USED WITH CABLES II, III & V.

ITEM NO	QTY REQ'D	MATERIAL	MATERIAL SIZE	SPEC	DESCRIPTION	DRAWING NO
1		STEEL	9 DIA. x 7 3/4 LG.	SEE NOTES	TYPE II BUSHING	

Tolerances: UNLESS NOTED FRACTION ± 1/16; .XXX ± .010; .XX ± .030; ANGLE ± .5°

MATL. WT. NO. SIZE | FINISHED WT. APPROX. 96.8 lb | MAX'D MIN HARDNESS

HEAD TREAT | FINISH 125 √ | HEAT ABSORBS

Freyssinet PRESCON

THE PRESCON CORPORATION
8918 TESORO DRIVE
SAN ANTONIO, TEXAS
78217
a freyssinet international company

Disclosure Notice: This drawing is the exclusive property of The Prescon Corporation and the information shown may not be used nor the drawing reproduced without written permission of The Prescon Corporation

CONTRACTOR: WILLIAMS BROTHERS CONSTRUCTION CO., INC.
IHI INTERNATIONAL, INC.

ENGINEER: FRANKLAND AND LIENHARD – MODJESKI AND MASTERS

PROJECT: MISSISSIPPI RIVER BRIDGE (LULING)
MAIN RIVER CROSSING SUPERSTRUCTURE
ST. CHARLES PARISH

PROJECT NUMBER	STATE
450-37-02 FAP. 1-310-4(355)223	LOUISIANA

TYPE II BUSHING

(600 TON)

DWN BY HGWN 23 JULY 79
CHK'D REIFFERT 8-31-79
SCALE: FULL

PWE-14

REV B

DATE	REVISION DESCRIPTION	REV. NO.

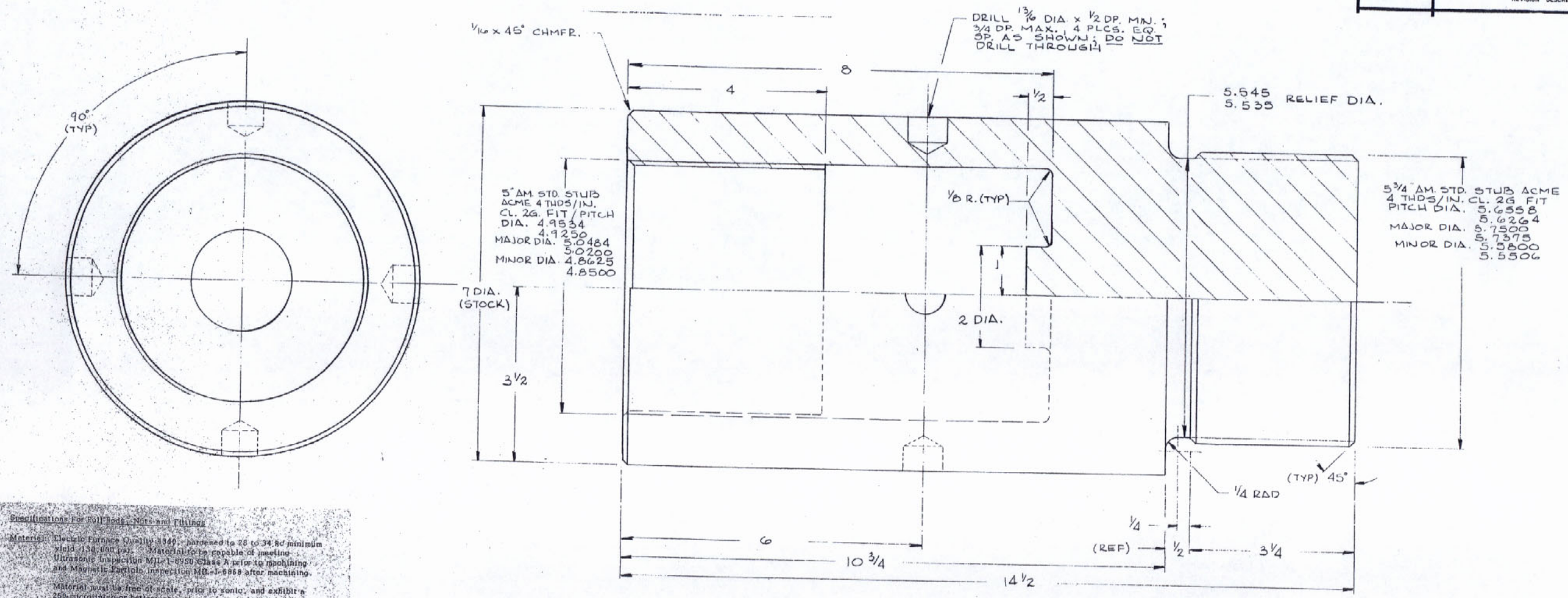

Specifications For Full Rods, Nuts and Fittings

Material: Electric Furnace Quality 4340, hardened to 28 to 34 Rc minimum yield (130,000 psi). Material to be capable of meeting Ultrasonic Inspection MIL-I-6950 Class A prior to machining and Magnetic Particle Inspection MIL-I-6868 after machining.

Material must be free of scale, prior to sonic, and exhibit a 250 microfinish or better on entire surface to be soniced.

1.) Machine as per drawing.
2.) Polish to a surface finish of 32 rms.
3.) Inspect for straightness of rod, Max. Deviation .025" per 12.0".
4.) Inspect surface finish.
5.) Test Coupons: 3 charpy "V" notch longitudinal (with notch transverse) tests at 15 ft. lbs. Charpy "V" notch material shall be stamped to correspond with material used. 2 longitudinal tensile tests at half radius. Hardness tests across diameter. All tests at room temperature and according to ASTM A370, E18, E23. Charpy at 0°F.
6.) Thread Inspection: Including lead accuracy and thread form as shown.
7.) Thoroughly clean by vapor degreasing with Trichlorethylene and dry.
8.) Apply Drylube 1A all over.

The following documentation is required:
Certification of inspection for

a). Surface finish
b). Ultrasonic testing
c). Magnetic particle testing.
d). Thread inspection

And

a). Charpy test results
b). Yield strength
c). Tensile strength
d). Elongation @ rupture
f). Hardness readings

Notes: Remove all burrs and break sharp edges.

APPROVED
FOR SIZE OF MATERIAL AND STRENGTH OF CONNECTIONS
BRIDGE DESIGN SECTION
LOUIS A. CARRIDO BRIDGE DESIGN ENGINEER
By REB Date MAY 6 1981

By I.V. 4-21-81

RECEIVED APR 7 1981 MAR 30 1981

THIS BUSHING IS USED WITH CABLE IV.

ITEM NO.	QTY. REQ'D	MATERIAL	MATERIAL SIZE	SPEC.	DESCRIPTION	DRAWING NO.
1		STEEL	7 DIA x 14 1/2 LG.	SEE NOTES	TYPE IV BUSHING	

Tolerances UNLESS NOTED
FRACTION ± 1/16
.XXX ± .010
DECIMAL ± .XX ± .030
ANGLE ± .5°

MAT'L WGT. OF SIZE | FINISHED WGT. APPROX. 100# | MAX. & MIN. HARDNESS
HEAT TREAT | FINISH 125 | NEXT ASSEMBLY

Freyssinet PRESCON

THE PRESCON CORPORATION
8918 TESORO DRIVE
SAN ANTONIO, TEXAS
78217
a freyssinet international company

Disclosure Notice
This drawing is the exclusive property of The Prescon Corporation and the information shown may not be used nor the drawing reproduced without written permission of The Prescon Corporation.

CONTRACTOR
WILLIAMS BROTHERS CONSTRUCTION CO., INC.
IHI INTERNATIONAL, INC.

ENGINEER
FRANKLAND AND LIENHARD – MODJESKI AND MASTERS

PROJECT
MISSISSIPPI RIVER BRIDGE (LULING)
MAIN RIVER CROSSING SUPERSTRUCTURE
ST. CHARLES PARISH

PROJECT NUMBER | STATE

TYPE IV BUSHING

JOB NO. PBX 8001
DRAWN BY HÖHN
DATE 23 JULY 79
CHECKED BY PEIFFERT

DWG. NUMBER PWE.

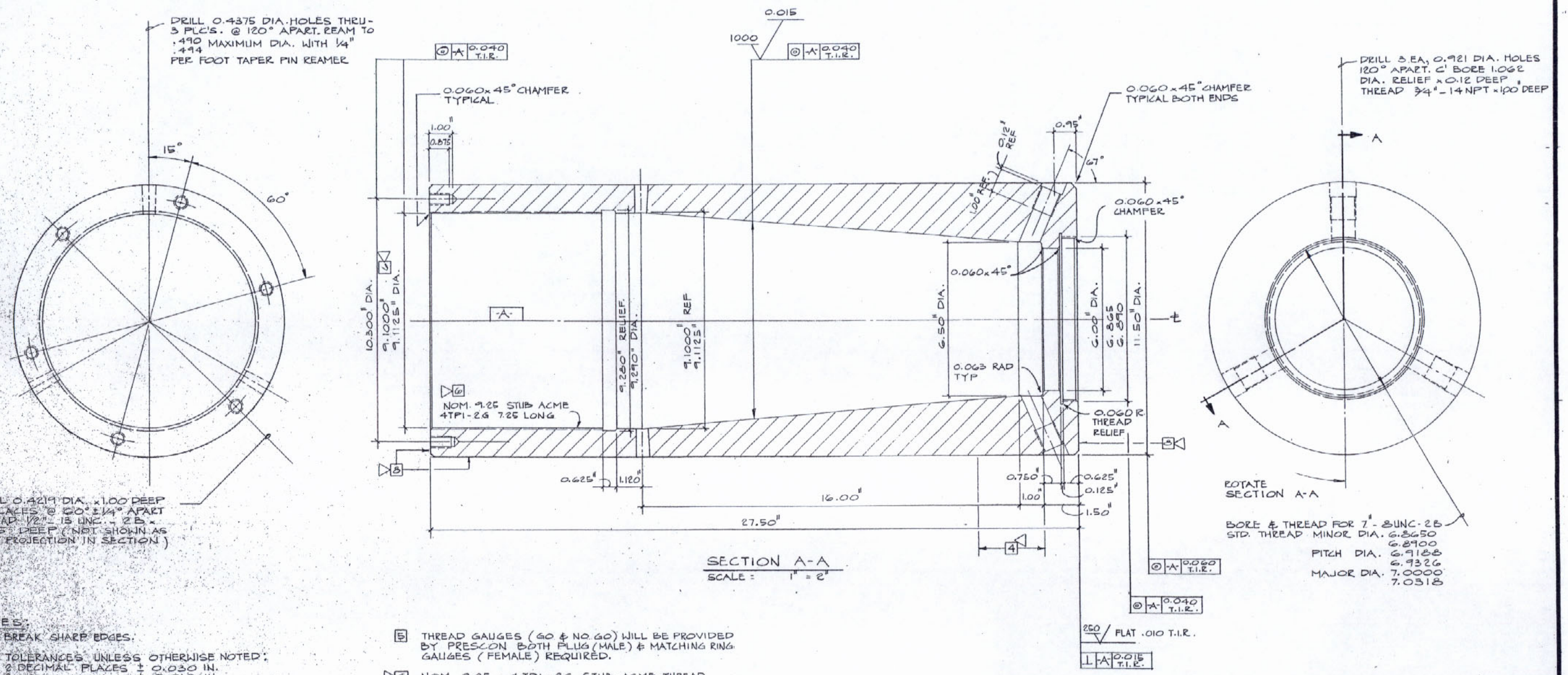

SECTION A-A
SCALE: 1" = 2"

NOTES:

[1] BREAK SHARP EDGES.

[2] TOLERANCES UNLESS OTHERWISE NOTED:
2 DECIMAL PLACES ± 0.030 IN.
3 " " ± 0.010 IN.
4 " " ± 0.001 IN.

[3] MATERIAL SPECIFICATIONS

FORGED SOCKET SHALL CONFORM TO ASTM A-508 EXCEPT AS NOTED BELOW: ULTIMATE TENSILE STRENGTH 85 KSI, YIELD POINT (0.2% OFFSET) 55 KSI, ELONGATION @ FAILURE (2" LGTH.) 20 %, NOTCH TOUGHNESS 0°F 25 FT. LBS. (CHARPY V NOTCH)

[4] EACH SOCKET SHALL BE IDENTIFIED BY ONE STAMPED ON SEQUENTIAL NUMBER. VENDOR SHALL PROVIDE A LIST INDICATING NUMBERS TO BE ASSIGNED TO EACH SOCKET FOR APPROVAL BY PRESCON. IDENTIFICATION NUMBERS SHALL BE APPROX. 3/8" TO 1/2" IN SIZE WITH RECESSED DEPTH OF NOT MORE THAN 0.060 IN. OR LESS THAN 0.030 IN. FINAL CONFIGURATION. LOCATE THE IDENTIFICATION NUMBER AS NOTED ON PART. MIDWAY BETWEEN 1.062 DIA. HOLES.

[5] THREAD GAUGES (GO & NO GO) WILL BE PROVIDED BY PRESCON BOTH PLUG (MALE) & MATCHING RING GAUGES (FEMALE) REQUIRED.

[6] NOM. 9.25 - 4 TPI - 2G STUB ACME THREAD
MINOR DIA. 9.1000
9.1125
PITCH DIA. 9.1750
9.2037
MAJOR DIA. 9.2700
9.3036

[7] ALL SOCKETS SHALL BE ULTRASONIC TESTED.
ACCEPTANCE IN ACCORDANCE WITH APPROVED INSPECTION PROCEDURE.

[8] SHOP COAT PAINT (BY PRESCON)
A. REMOVE OILY RESIDUES W/ SOLVENT
B. SANDBLAST PER SECTION 811.06 OF STD. SPECIFICATIONS.
C. SPRAY PAINT SAME DAY W/ ONE FULL COAT OF "INORGANIC ZINC PRIMER" MIN. DRY THICKNESS 2.5 MILS. △
D. REF. PAINTED SURFACES
△ E. PRIMER SHALL CONFORM TO SUBSECTION 1008.03 LOUISIANA STANDARD SPECIFICATIONS, AS MANUFACTURED BY MOBIL CHEMICAL CO. OR EXXON CHEMICAL CO.

RMS SURFACE FINISH
SURFACE WAVINESS
◎ CONCENTRICITY; ⊥ PERPENDICULAR
REFERENCE (SURFACE OR AXIS)
TOLERANCE (TOTAL INDICATED READING)
( ) ◎ -A- ( ) T.I.R.

APPROVED
For Design, Material & Workmanship
Frankland & Lienhard
By I.V. 4-21-81

APPROVED
FOR SIZE OF MATERIAL AND STRENGTH OF CONNECTIONS
BRIDGE DESIGN SECTION
LOUIS A. ARONSO BRIDGE DESIGN ENGINEER
By REB Date MAY 6 1981

RECEIVED APR 7 1981
RECEIVED MAR 30 1981

NO.	DATE	REVISION	BY
1	10/15/78	K. FAINT PRIMER	M.T.

THE PRESCON CORPORATION
8918 TESORO DRIVE
SAN ANTONIO, TEXAS 78217
(512) 828-6264

CONTRACTOR
WILLIAMS BROTHERS CONSTRUCTION CO., INC.
IHI INTERNATIONAL, INC.

ENGINEER
FRANKLAND AND LIENHARD - MODJESKI AND MASTERS
CONSULTING ENGINEERS

PROJECT
MISSISSIPPI RIVER BRIDGE (LULING)
MAIN RIVER CROSSING SUPERSTRUCTURE
ST. CHARLES PARISH

PROJECT NUMBER	STATE
450-37-02, FAP. I-310-4(35)223	LOUISIANA

SOCKET I
LIVE END

JOB NO. P-BX 8001
DRAWN BY M. TELLEZ.
DATE 9-15-78
CHECKED BY T. CASTELLAW
DATE 9/20/78

DWG. NUMBER
S-1

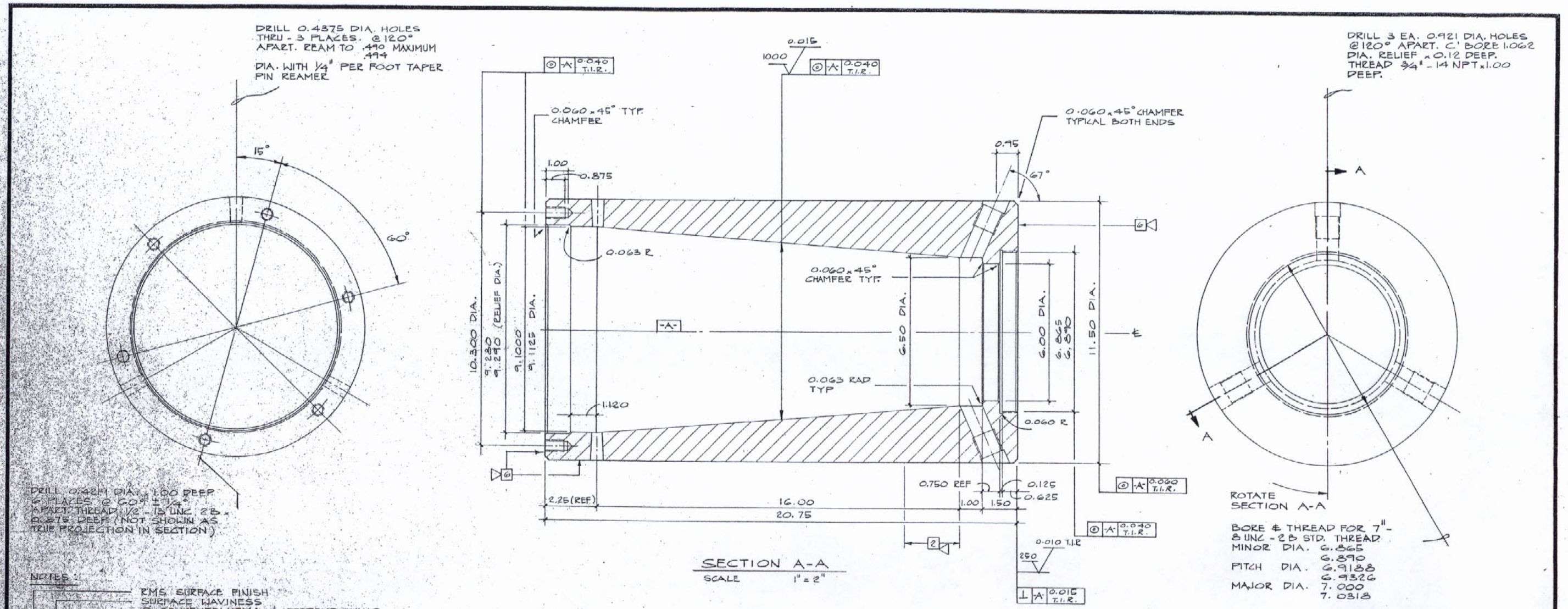

NOTES:

RMS SURFACE FINISH
SURFACE WAVINESS
◎ CONCENTRICITY; ⊥ PERPENDICULAR
REFERENCE (SURFACE OR AXIS)
TOLERANCE (TOTAL INDICATED READING)

1. BREAK SHARP EDGES.
2. EACH SOCKET SHALL BE IDENTIFIED BY ONE STAMPED ON SEQUENTIAL NUMBER. VENDOR SHALL PROVIDE A LIST INDICATING NUMBERS TO BE ASSIGNED TO EACH SOCKET FOR APPROVAL BY PRESCON.
   IDENTIFICATION NUMBERS SHALL BE APPROXIMATELY 3/8" TO 1/2" IN SIZE WITH RECESSED DEPTH OF NOT MORE THAN 0.060 IN. OR LESS THAN 0.030 IN FINAL CONFIGURATION. LOCATE THE IDENTIFICATION NUMBER AS NOTED ON PART. MIDWAY BETWEEN 1.062 DIA. HOLES.
3. TOLERANCES UNLESS OTHERWISE NOTED: 2 DECIMAL PLACES ± 0.030 IN.
   3 " " ± 0.010 IN.
   4 " " ± 0.001 IN.
4. ALL SOCKETS SHALL BE ULTRASONIC TESTED. ACCEPTANCE IN ACCORDANCE WITH APPROVED INSPECTION PROCEDURE.
5. MATERIAL SPECIFICATIONS:
   FORGED SOCKET SHALL CONFORM TO ASTM A-508 EXCEPT AS NOTED BELOW
   ULTIMATE TENSILE STRENGTH 85 KSI ELONGATION @ FAILURE (2" LGTH.) 20 %
   YIELD POINT (0.2% OFFSET) 55 KSI NOTCH TOUGHNESS @ 0°F 25 FT LBS. (CHARPY 'V' NOTCH)

6. SHOP COAT PAINT. (BY PRESCON)
   A. REMOVE OILY RESIDUES W/ SOLVENT.
   B. SANDBLAST PER SECTION 811.06 OF STD SPECIFICATIONS.
   C. SPRAY PAINT SAME DAY W/ ONE FULL COAT OF "INORGANIC ZINC PRIMER," MIN. DRY THICKNESS 2.5 MILS. △
   D. REF PAINTED SURFACES ABOVE
   △ E. PRIMER SHALL CONFORM TO SUBSECTION 1008.03 LOUISIANA STANDARD SPECIFICATIONS, AS MANUFACTURED BY MOBIL CHEMICAL CO. OR EXXON CHEMICAL CO.

APPROVED
For Design, Date
Frankland & Lienhard
By I.V. 4-21-81

APPROVED
FOR SIZE OF MATERIAL AND STRENGTH OF CONNECTIONS
BRIDGE DESIGN SECTION
LOUIS A. FARRIDO BRIDGE DESIGN ENGINEER
By R.E.B. Date MAY 8 1981

RECEIVED APR 7 1981

MAR 30 1981

NO.	DATE	REVISION	BY

THE PRESCON CORPORATION
8918 TESORO DRIVE
SAN ANTONIO, TEXAS 78217
(512) 828-6264

Disclosure Notice
This drawing is the exclusive property of The Prescon Corporation and the information shown may not be used nor the drawing reproduced without written permission of The Prescon Corporation.

CONTRACTOR
WILLIAMS BROTHERS CONSTRUCTION CO., INC.
IHI INTERNATIONAL, INC.

ENGINEER
FRANKLAND AND LIENHARD – MODJESKI AND MASTERS

PROJECT
MISSISSIPPI RIVER BRIDGE (LULING)
MAIN RIVER CROSSING SUPERSTRUCTURE
ST. CHARLES PARISH

PROJECT NUMBER	STATE
450-37-02 F.A.P. I-310-4(35)223	LOUISIANA

SOCKET I
DEAD END

JOB NO.	PBX 8001
DRAWN BY	M. TELLEZ
DATE	9-18-78
CHECKED BY	T. CASTELLAW
DATE	9/20/78

DWG NUMBER S-2

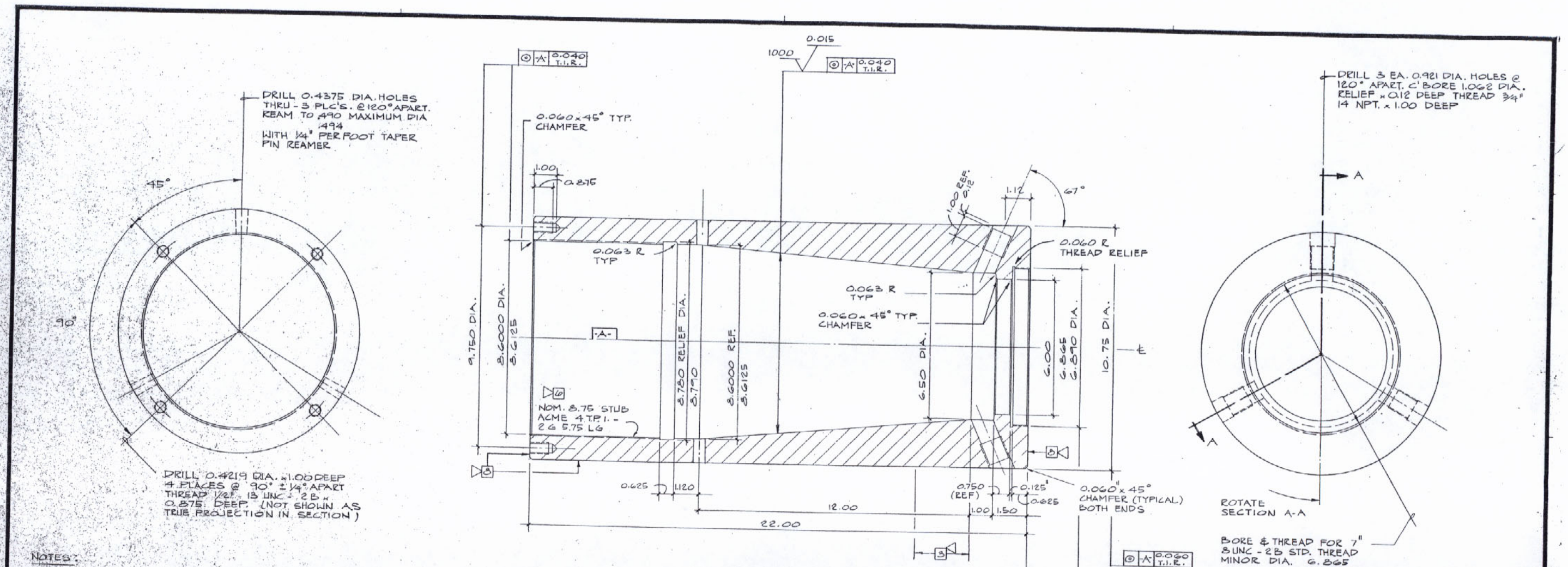

SECTION A-A
SCALE 1" = 2"

NOTES:

RMS SURFACE FINISH
SURFACE WAVINESS
◎ CONCENTRICITY, ⊥ PERPENDICULAR
REFERENCE (SURFACE OR AXIS)
TOLERANCE (TOTAL INDICATED READING)

1. TOLERANCE UNLESS OTHERWISE NOTED:
   2 DECIMAL PLACES ± 0.030 IN.
   3 " " ± 0.010 IN.
   4 " " ± 0.001 IN.

2. ALL SOCKETS SHALL BE ULTRASONIC TESTED. ACCEPTANCE IN ACCORDANCE WITH APPROVED INSPECTION PROCEDURE.

3. EACH SOCKET SHALL BE IDENTIFIED BY ONE STAMPED ON SEQUENTIAL NUMBER. VENDOR SHALL PROVIDE A LIST INDICATING NUMBERS TO BE ASSIGNED TO EACH SOCKET FOR APPROVAL BY PRESCON. IDENTIFICATION NUMBERS SHALL BE APPROXIMATELY 3/8" TO 1/2" IN SIZE RECESSED DEPTH OF NOT MORE THAN 0.060 IN. OR LESS THAN 0.030" IN. FINAL CONFIGURATION. LOCATE THE IDENTIFICATION NUMBER AS NOTED ON PART, MIDWAY BETWEEN 1.062 DIA. HOLES.

4. MATERIAL SPECIFICATIONS:
   FORGED SOCKET SHALL CONFORM TO ASTM A-508 EXCEPT AS NOTED BELOW: ULTIMATE TENSILE STRENGTH OF 85 KSI, YIELD POINT (0.2% OFFSET) OF 55 KSI, ELONGATION @ FAILURE (2" LGTH) 20%, NOTCH TOUGHNESS @ 0°F 25 FT LBS (CHARPY "V" NOTCH)

5. THREAD GAUGES (GO & NO GO) WILL BE PROVIDED BY PRESCON BOTH PLUG GAUGES (MALE) & MATCHING RING GAUGES (FEMALE) ARE REQUIRED.

6. NOMINAL 8.75 - 4 TPI - 2G STUB ACME THREAD
   MINOR DIA. - 8.6000
   8.6125
   PITCH DIA. - 8.6750
   8.7044
   MAJOR DIA. - 8.7700
   8.8030

7. BREAK SHARP EDGES

8. SHOP COAT PAINT (BY PRESCON)
   A. REMOVE OILY RESIDUES W/ SOLVENT.
   B. SANDBLAST PER SECTION 811.06 OF STD. SPECIFICATIONS.
   C. SPRAY PAINT SAME DAY W/ ONE FULL COAT OF "INORGANIC ZINC PRIMER" MIN. DRY THICKNESS 2.5 MILS.
   D. REF. PAINTED SURFACES ABOVE.
   E. PRIMER SHALL CONFORM TO SUBSECTION 1008.03 LOUISIANA STANDARD SPECIFICATIONS, AS MANUFACTURED BY MOBIL CHEMICAL CO. OR EXXON CHEMICAL CO.

APPROVED
For Design, Material & Workmanship
Frankland & Lienhard
By L.V. 4-21-81

APPROVED
FOR SIZE OF MATERIAL AND STRENGTH OF CONNECTIONS
BRIDGE DESIGN SECTION
By RFB Date MAY 6 1981

RECEIVED
APR 7 1981

MAR 30 1981

NO.	DATE	REVISION	BY
1	12/10/78	PAINT PRIMER	M.T.

THE PRESCON CORPORATION
8918 TESORO DRIVE
SAN ANTONIO, TEXAS 78217
(512) 828-6264

CONTRACTOR: WILLIAMS BROTHERS CONSTRUCTION CO., INC. IHI INTERNATIONAL, INC.
ENGINEER: FRANKLAND AND LIENHARD - MODJESKI AND MASTERS

PROJECT: MISSISSIPPI RIVER BRIDGE (LULING) MAIN RIVER CROSSING SUPERSTRUCTURE ST. CHARLES PARISH
PROJECT NUMBER | STATE

SOCKET II LIVE END

JOB NO. PBX 8001
DRAWN BY M. TELLEZ
DATE 9-18-78
CHECKED BY T. CASTELLAW
DWG. NUMBER S-3

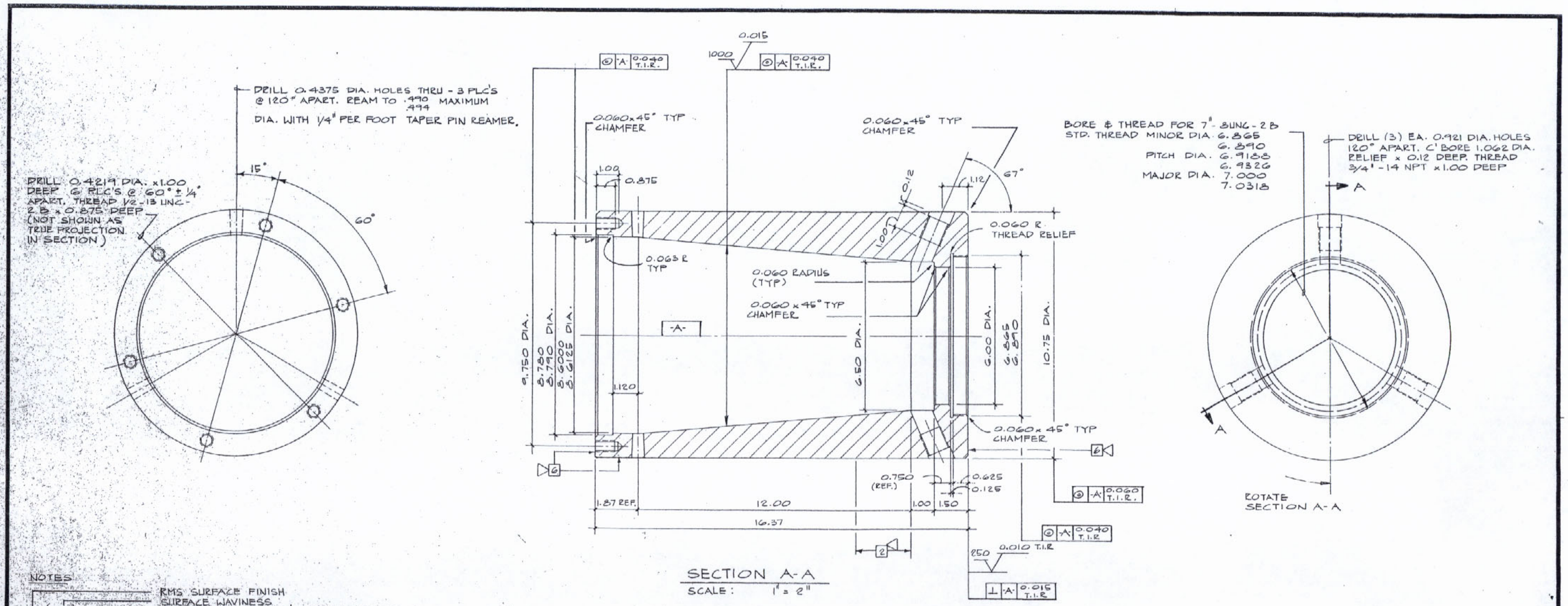

SECTION A-A
SCALE: 1" = 2"

NOTES

RMS SURFACE FINISH
SURFACE WAVINESS
◎ CONCENTRICITY; ⊥ PERPENDICULAR
REFERENCE (SURFACE OR AXIS)
TOLERANCE (TOTAL INDICATED READING)

1. BREAK SHARP EDGES.
2. EACH SOCKET SHALL BE IDENTIFIED BY ONE STAMPED ON SEQUENTIAL NUMBER. VENDOR SHALL PROVIDE A LIST INDICATING NUMBERS TO BE ASSIGNED TO EACH SOCKET FOR APPROVAL BY PRESCON. IDENTIFICATION NUMBERS SHALL BE APPROXIMATELY 3/8" TO 1/2" IN SIZE WITH RECESSED DEPTH OF NOT MORE THAN 0.060 IN. OR LESS THAN 0.030 IN FINAL CONFIGURATION. LOCATE THE IDENTIFICATION NUMBER AS NOTED ON PART. MIDWAY BETWEEN 1.062 DIA. HOLES.
3. TOLERANCES UNLESS OTHERWISE NOTED: 2 DECIMAL PLACES ± 0.030 IN.
   3 ± 0.010 IN.
   4 ± 0.001 IN.
4. ALL SOCKETS SHALL BE ULTRASONIC TESTED. ACCEPTANCE IN ACCORDANCE WITH APPROVED INSPECTION PROCEDURE.
5. MATERIAL SPECIFICATION:
   FORGED SOCKET SHALL CONFORM TO ASTM-A-508 EXCEPT AS NOTED BELOW:
   ULTIMATE TENSILE STRENGTH - 85 KSI
   YIELD PT (0.2% OFFSET) - 55 KSI
   ELONGATION @ FAILURE (2" LG.) - 20 %
   NOTCH TOUGHNESS @ 0° F - 25 FT. LB. (CHARPT "V" NOTCH)

6. SHOP COAT PAINT. (BY PRESCON)
   A. REMOVE OILY RESIDUES W/ SOLVENT.
   B. SANDBLAST PER SECTION 811.06 OF STD SPECIFICATIONS.
   C. SPRAY PAINT SAME DAY W/ ONE FULL COAT OF "INORGANIC ZINC PRIMER." MIN. DRY THICKNESS 2.5 MILS.
   D. REF. PAINTED SURFACES
   E. PRIMER SHALL CONFORM TO SUBSECTION 1008.03 LOUISIANA STANDARD SPECIFICATIONS, AS MANUFACTURED BY MOBIL CHEMICAL CO. OR EXXON CHEMICAL CO.

APPROVED
For Design & Detailing
Frankland & Lienhard
By I.V. 4-21-81

RECEIVED
APR 7 1981

APPROVED
FOR SIZE OF MATERIAL AND STRENGTH OF CONNECTIONS
BRIDGE DESIGN SECTION
LOUIS A. GARRIGO BRIDGE DESIGN ENGINEER
By REB Date MAY 6 1981

MAR 30 1981

NO.	DATE	REVISION	BY
1	12/15/78	PAINT PRIMER	MT.

THE PRESCON CORPORATION
8916 TESORO DRIVE
SAN ANTONIO, TEXAS 78217
(512) 828-6264

Disclosure Notice
This drawing is the exclusive property of The Prescon Corporation and the information shown may not be used nor the drawing reproduced without written permission of The Prescon Corporation.

CONTRACTOR
WILLIAMS BROTHERS CONSTRUCTION CO., INC.
IHI INTERNATIONAL, INC.

ENGINEER
FRANKLAND AND LIENHARD – MODJESKI AND MASTERS

PROJECT
MISSISSIPPI RIVER BRIDGE (LULING)
MAIN RIVER CROSSING SUPERSTRUCTURE
ST. CHARLES PARISH

PROJECT NUMBER	STATE
450-37-02 FAP. I-310-4(35)223	LOUISIANA

SOCKET II
DEAD END

JOB NO. PBX 8001
DRAWN BY M. TELLEZ
DATE 9-19-78
CHECKED BY T. CASTELLAW
DATE 9/20/78

DWG. NUMBER
S-4

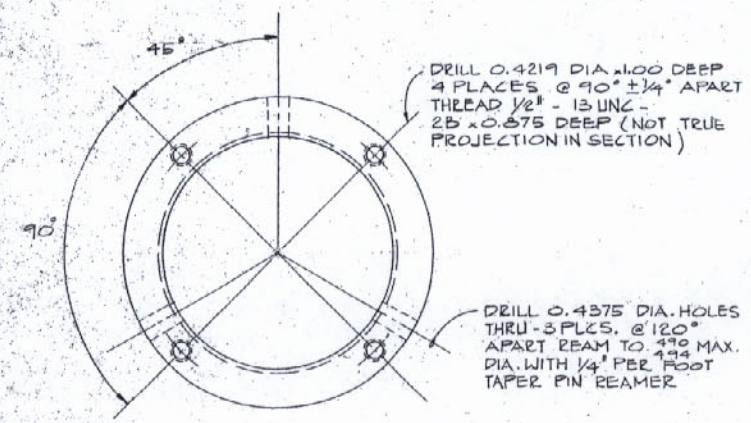

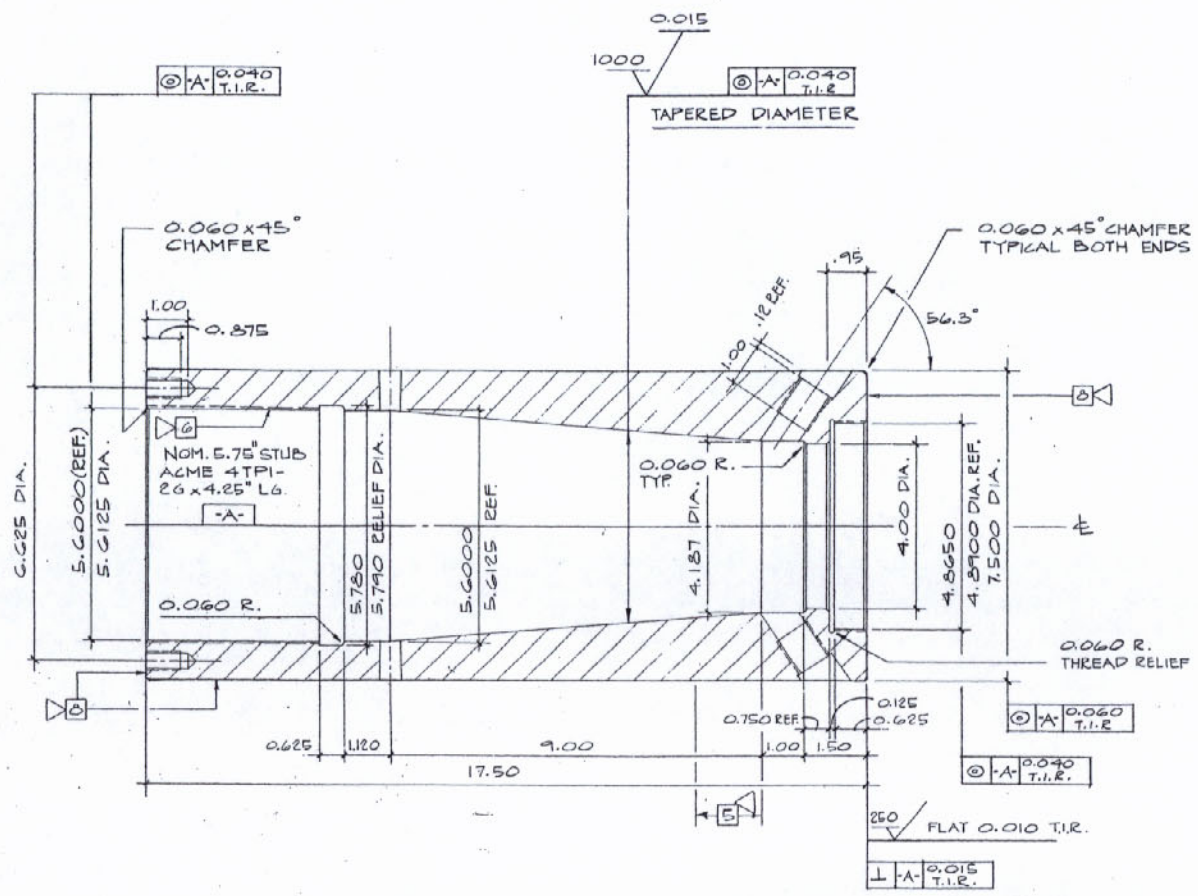

SECTION A-A
SCALE 1" = 2"

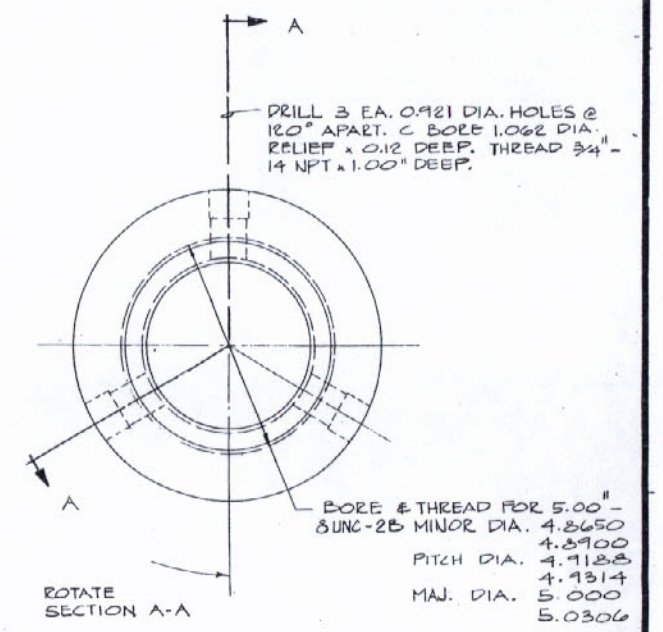

NOTES:

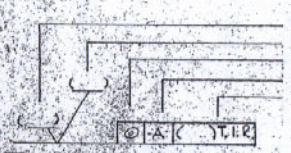

1. BREAK SHARP EDGES.
2. TOLERANCES: 2 DECIMAL PLACES ± 0.030 IN. (UNLESS NOTED) 3 " " ± 0.010 IN. 4 " " ± 0.001 IN.
3. MATERIAL SPECIFICATION - FORGED SOCKET SHALL CONFORM TO ASTM A-508 EXCEPT AS NOTED BELOW:
   ULTIMATE TENSILE STRENGTH - 85 KSI
   YIELD PT. (0.2% OFFSET) - 55 KSI
   ELONGATION @ FAILURE (2" LG.) - 20 %
   NOTCH TOUGHNESS @ 0° F - 25 FT. LB. (CHARPY "V" NOTCH)
4. ALL SOCKETS SHALL BE ULTRASONIC TESTED. ACCEPTANCE IN ACCORDANCE WITH APPROVED INSPECTION PROCEDURE.
5. EACH SOCKET SHALL BE IDENTIFIED BY ONE STAMPED ON SEQUENTIAL NUMBER. VENDOR SHALL PROVIDE A LIST INDICATING NUMBERS TO BE ASSIGNED TO EACH SOCKET FOR APPROVAL BY PRESCON. IDENTIFICATION NUMBERS SHALL BE APPROXIMATELY 3/8" TO 1/2" IN SIZE WITH RECESSED DEPTH OF NOT MORE THAN 0.060 IN. OR LESS THAN 0.030 IN FINAL CONFIGURATION. LOCATE THE IDENTIFICATION NUMBER AS NOTED ON PART, MIDWAY BETWEEN 1.062 DIA. HOLES.
6. NOM. 5.75 - 4 TPI 2G STUB ACME THREAD:
   MINOR DIA. 5.6000 5.6125
   PITCH DIA. 5.6750 5.7044
   MAJOR DIA. 5.7700 5.7994
7. THREAD GAUGES (GO & NO GO) WILL BE PROVIDED BY PRESCON. BOTH PLUG (MALE) & MATCHING RING GAUGE (FEMALE) ARE REQUIRED.
8. SHOP COAT PAINT. (BY PRESCON)
   A. REMOVE OILY RESIDUES W/ SOLVENT.
   B. SANDBLAST PER SECTION 811.06 OF STD. SPECIFICATIONS.
   C. SPRAY PAINT SAME DAY W/ ONE FULL COAT OF "INORGANIC ZINC PRIMER," MIN. DRY THICKNESS 2.5 MILS.
   D. REF. PAINTED SURFACES
   E. PRIMER SHALL CONFORM TO SUBSECTION 1008.03 LOUISIANA STANDARD SPECIFICATIONS, AS MANUFACTURED BY MOBIL CHEMICAL CO. OR EXXON CHEMICAL CO.

APPROVED
For Design Purposes Only
Frankland & Lienhard
By I.V. 4-21-81

APPROVED
FOR SIZE OF MATERIAL AND STRENGTH OF CONNECTIONS
BRIDGE DESIGN SECTION
LOUIS A. GUIDRY BRIDGE DESIGN ENGINEER
By REB Date MAY 6 1981

RECEIVED APR 7 1981

MAR 30 1981

NO.	DATE	REVISION	BY
1	10/3/78	PAINT PRIMER	

THE PRESCON CORPORATION
8218 TESORO DRIVE
SAN ANTONIO, TEXAS 78217
(512) 828-6264

Disclosure Notice
This drawing is the exclusive property of The Prescon Corporation and the information shown may not be used nor the drawing reproduced without written permission of The Prescon Corporation.

CONTRACTOR: WILLIAMS BROTHERS CONSTRUCTION CO., INC. IHI INTERNATIONAL, INC.
ENGINEER: FRANKLAND AND LIENHARD - MODJESKI AND MASTERS

PROJECT: MISSISSIPPI RIVER BRIDGE (LULING) MAIN RIVER CROSSING SUPERSTRUCTURE ST. CHARLES PARISH

PROJECT NUMBER	STATE
450-37-02 FAP. 1-310-4(35)223	LOUISIANA

SOCKET IV
LIVE END

JOB NO. PBX 8001
DRAWN BY M. TELLEZ
DATE 9-19-78
CHECKED BY T. CASTELLANI
DATE 9/20/78

DWG NUMBER S-5
REV. 1

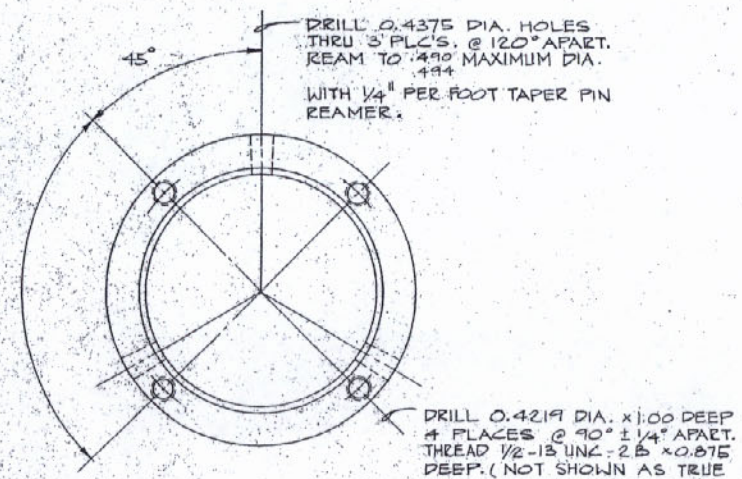

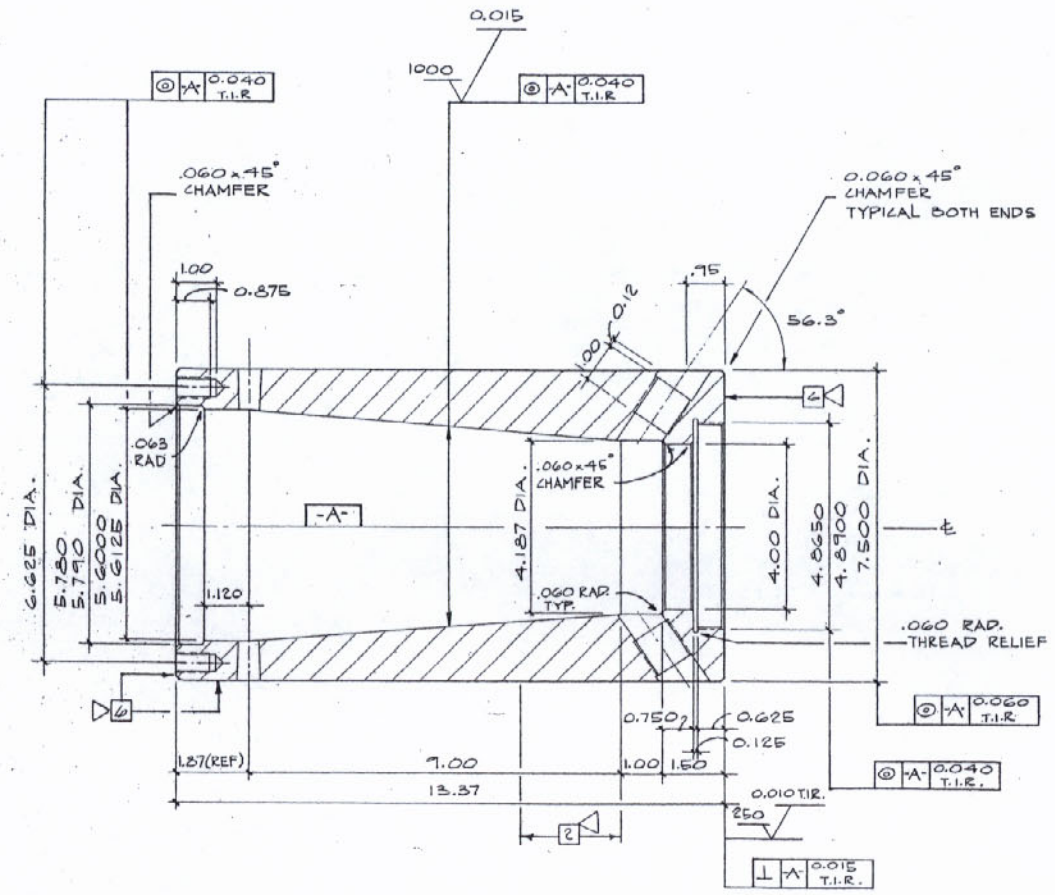

SECTION A-A

SCALE: 1" = 2"

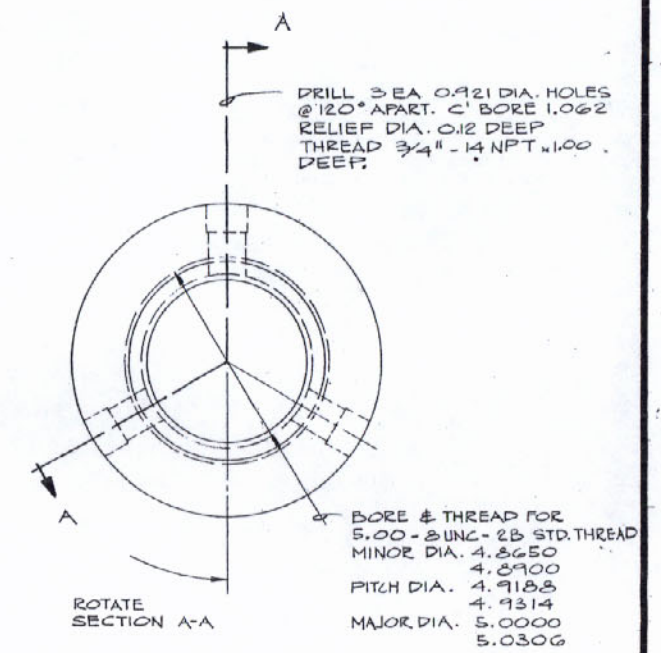

NOTES:

RMS SURFACE FINISH
SURFACE WAVINESS
◎ CONCENTRICITY; ⊥ PERPENDICULAR
REFERENCE (SURFACE OR AXIS)
TOLERANCE (TOTAL INDICATED READING)

1. BREAK SHARP EDGES.
2. EACH SOCKET SHALL BE IDENTIFIED BY ONE STAMPED ON SEQUENTIAL NUMBER; VENDOR SHALL PROVIDE A LIST INDICATING NUMBERS TO BE ASSIGNED TO EACH SOCKET FOR APPROVAL BY PRESCON. IDENTIFICATION NUMBERS SHALL BE APPROXIMATELY 3/8" TO 1/2" IN SIZE WITH RECESSED DEPTH OF NOT MORE THAN 0.060 IN. OR LESS THAN 0.030 IN FINAL CONFIGURATION. LOCATE THE IDENTIFICATION NUMBER AS NOTED ON PART, MIDWAY BETWEEN 1.062 DIA. HOLES.
3. TOLERANCES UNLESS NOTED: 2 DECIMAL PLACES ± 0.030 IN.
   3 ± 0.010 IN.
   4 ± 0.001 IN.
4. ALL SOCKETS SHALL BE ULTRASONIC TESTED. ACCEPTANCE IN ACCORDANCE WITH APPROVED INSPECTION PROCEDURE.
5. MATERIAL SPECIFICATION
   FORGED SOCKET SHALL CONFORM TO ASTM A-508 EXCEPT AS NOTED BELOW:
   ULTIMATE TENSILE STRENGTH - 85 KSI
   YIELD PT. (0.2% OFFSET) - 55 KSI
   ELONGATION @ FAILURE (2" LG.) - 20 %
   NOTCH TOUGHNESS @ 0°F - 25 FT. LB. (CHARPY "V" NOTCH)

6. SHOP COAT PAINT. (BY PRESCON)
   A. REMOVE OILY RESIDUES W/ SOLVENT.
   B. SANDBLAST PER SECTION 811.06 OF STD. SPECIFICATIONS.
   C. SPRAY PAINT SAME DAY W/ ONE FULL COAT OF "INORGANIC ZINC PRIMER" MIN. DRY THICKNESS 2.5 MILS.
   D. REF. PAINTED SURFACES
   E. PRIMER SHALL CONFORM TO SUBSECTION 1008.03 LOUISIANA STANDARD SPECIFICATIONS, AS MANUFACTURED BY MOBIL CHEMICAL CO. OR EXXON CHEMICAL CO.

APPROVED
For Design, Construction & Ownership
Frankland & Lienhard
By I.V. 4-21-81

RECEIVED APR 7 1981

APPROVED
FOR SIZE OF MATERIAL AND STRENGTH OF CONNECTIONS
BRIDGE DESIGN SECTION
LOUIS A. MARINO BRIDGE DESIGN ENGINEER
By RFB Date MAY 6 1981

MAR 30 1981

NO.	DATE	REVISION	BY
1	12/15/78	PAINT PRIMER	M.T.

THE PRESCON CORPORATION
8918 TESORO DRIVE
SAN ANTONIO, TEXAS 78217
(512) 828-6264

Disclosure Notice
This drawing is the exclusive property of The Prescon Corporation and the information shown may not be used nor the drawing reproduced without written permission of The Prescon Corporation.

CONTRACTOR: WILLIAMS BROTHERS CONSTRUCTION CO., INC.
IHI INTERNATIONAL, INC.

ENGINEER: FRANKLAND AND LIENHARD – MODJESKI AND MASTERS

PROJECT: MISSISSIPPI RIVER BRIDGE (LULING)
MAIN RIVER CROSSING SUPERSTRUCTURE
ST. CHARLES PARISH

PROJECT NUMBER	STATE
450-37-02 FAP. I-310-4(35)223	LOUISIANA

SOCKET IV
DEAD END

JOB NO. PBX 8001
DRAWN BY M. TELLEZ
DATE 9-20-78
CHECKED BY T. CASTELLAN
DATE 9/20/78

DWG. NUMBER S-6
REV. 1

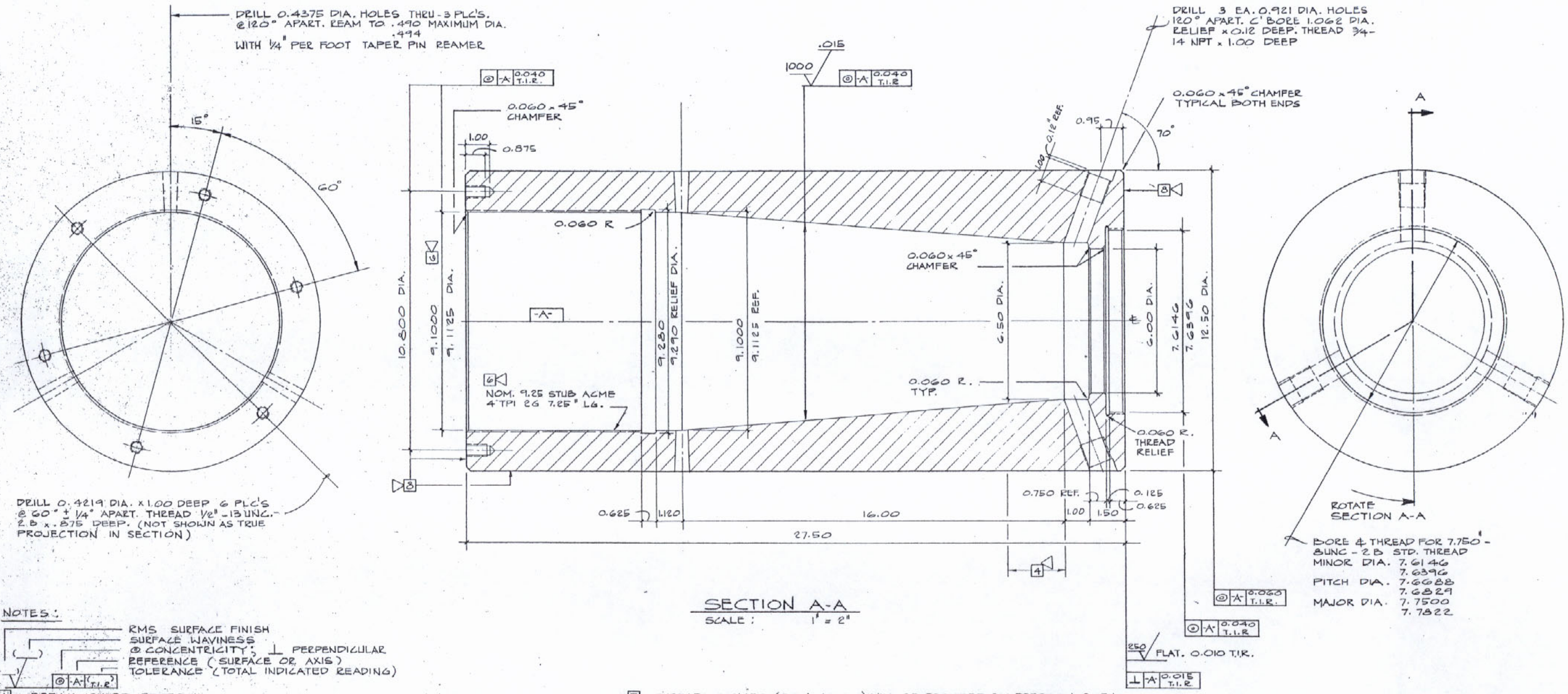

SECTION A-A
SCALE: 1" = 2"

NOTES:

RMS SURFACE FINISH
SURFACE WAVINESS
◎ CONCENTRICITY; ⊥ PERPENDICULAR
REFERENCE (SURFACE OR AXIS)
TOLERANCE (TOTAL INDICATED READING)

1. BREAK SHARP EDGES
2. TOLERANCES UNLESS OTHERWISE NOTED: 2 DECIMAL PLACES ±0.030 IN.; 3 " " ±0.010 IN.; 4 " " ±0.001 IN.
3. MATERIAL SPECIFICATIONS
   FORGED SOCKET SHALL CONFORM TO ASTM A-508 EXCEPT AS NOTED BELOW
   ULTIMATE TENSILE STRENGTH 85 KSI
   YIELD POINT (0.2% OFFSET) 55 KSI
   ELONGATION @ FAILURE (2" LGTH.) 20 %
   NOTCH TOUGHNESS @ 0°F 25 FT LBS. (CHARPY "V" NOTCH)
4. EACH SOCKET SHALL BE IDENTIFIED BY ONE STAMPED ON SEQUENTIAL NUMBER. VENDOR SHALL PROVIDE A LIST INDICATING NUMBERS TO BE ASSIGNED TO EACH SOCKET FOR APPROVAL BY PRESCON. IDENTIFICATION NUMBERS SHALL BE APPROX. 3/8" TO 1/2" IN SIZE WITH RECESSED DEPTH OF NOT MORE THAN 0.060 IN. OR LESS THAN 0.030 IN. FINAL CONFIGURATION. LOCATE THE IDENTIFICATION NUMBER AS NOTED ON PART. MIDWAY BETWEEN 1.062 DIA. HOLES.
5. THREAD GAUGES (60 & NO. 60) WILL BE PROVIDED BY PRESCON. BOTH PLUG (MALE) & MATCHING RING GAUGES (FEMALE) REQUIRED.
6. NOM. 9.25-4 TPI-2G STUB ACME THREAD MINOR DIA. 9.1000, 9.1125; PITCH DIA. 9.1750, 9.2037; MAJOR DIA. 9.2700, 9.3036
7. ALL SOCKETS SHALL BE ULTRASONIC TESTED. ACCEPTANCE IN ACCORDANCE WITH APPROVED INSPECTION PROCEDURE.
8. SHOP COAT PAINT (BY PRESCON)
   A. REMOVE OILY RESIDUES W/ SOLVENT.
   B. SANDBLAST PER SECTION 811.06 OF STD. SPECIFICATIONS
   C. SPRAY PAINT SAME DAY W/ ONE FULL COAT OF "INORGANIC ZINC PRIMER" MIN. DRY THICKNESS 2.5 MILS.
   D. REF. PAINTED SURFACES
   E. PRIMER SHALL CONFORM TO SUBSECTION 1005.03 LOUISIANA STANDARD SPECIFICATIONS, AS MANUFACTURED BY MOBIL CHEMICAL CO. OR EXXON CHEMICAL CO.

APPROVED
For Design, Materials and Workmanship
Frankland & Lienhard
By I.V. 4-21-81

APPROVED
FOR SIZE OF MATERIAL AND STRENGTH OF CONNECTIONS
BRIDGE DESIGN SECTION
LOUIS A. CAMPO BRIDGE DESIGN ENGINEER
By REB Date MAY 6 1981

RECEIVED APR 7 1981

MAR 30 1981

NO.	DATE	REVISION	BY
1	12/15/78	PAINT PRIMER	M.T.

THE PRESCON CORPORATION
8918 TESORO DRIVE
SAN ANTONIO, TEXAS 78217
(512) 828-6264

Disclosure Notice
This drawing is the exclusive property of The Prescon Corporation and the information shown may not be used nor the drawing reproduced without written permission of The Prescon Corporation.

CONTRACTOR: WILLIAMS BROTHERS CONSTRUCTION CO., INC. / IHI INTERNATIONAL, INC.
ENGINEER: FRANKLAND AND LIENHARD – MODJESKI AND MASTERS

PROJECT: MISSISSIPPI RIVER BRIDGE (LULING)
MAIN RIVER CROSSING SUPERSTRUCTURE
ST. CHARLES PARISH

PROJECT NUMBER	STATE
450-37-02 FAP. I-310-4(35)223	LOUISIANA

SOCKET V
LIVE END

JOB NO. PBX 8001
DRAWN BY M. TELLEZ
DATE 9-20-78
CHECKED BY T. CASTELLAW
DATE 9/20/78

DWG NUMBER S-7

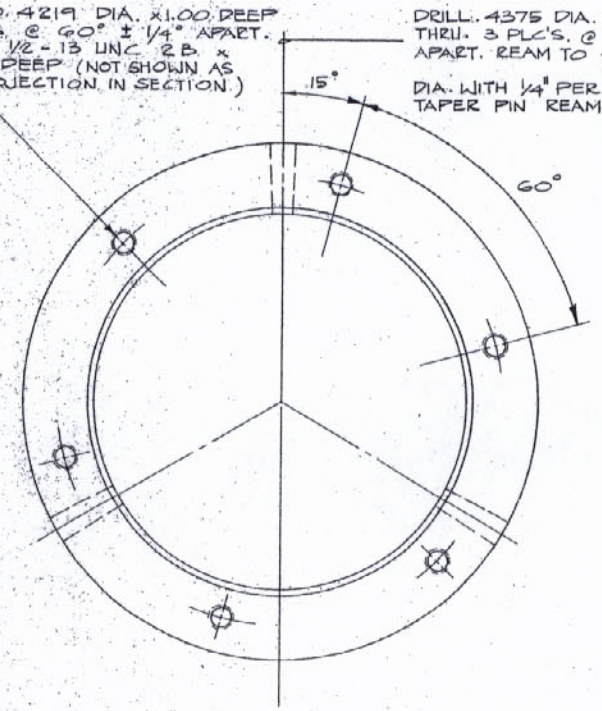

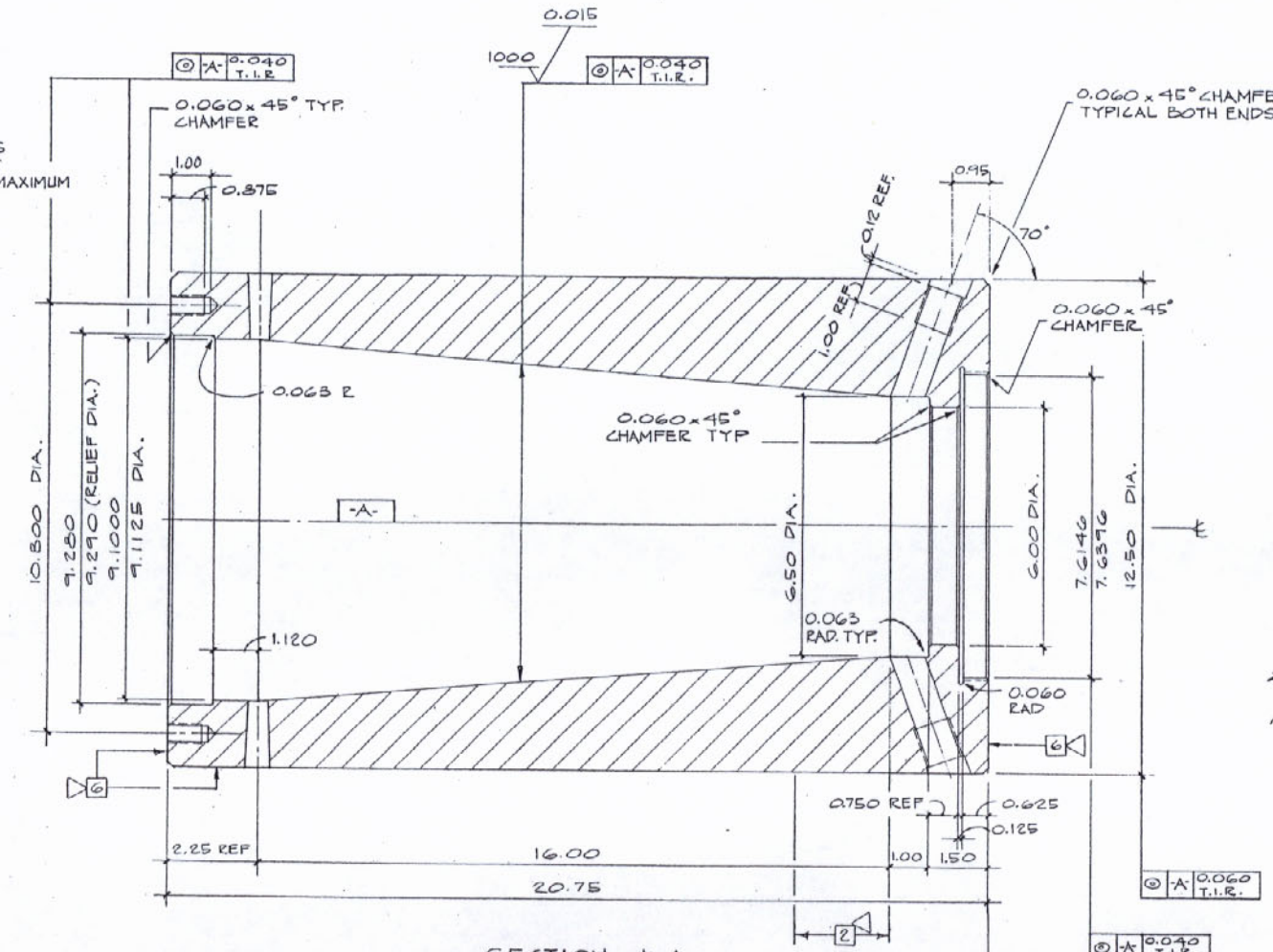

SECTION A-A
SCALE: 1" = 2"

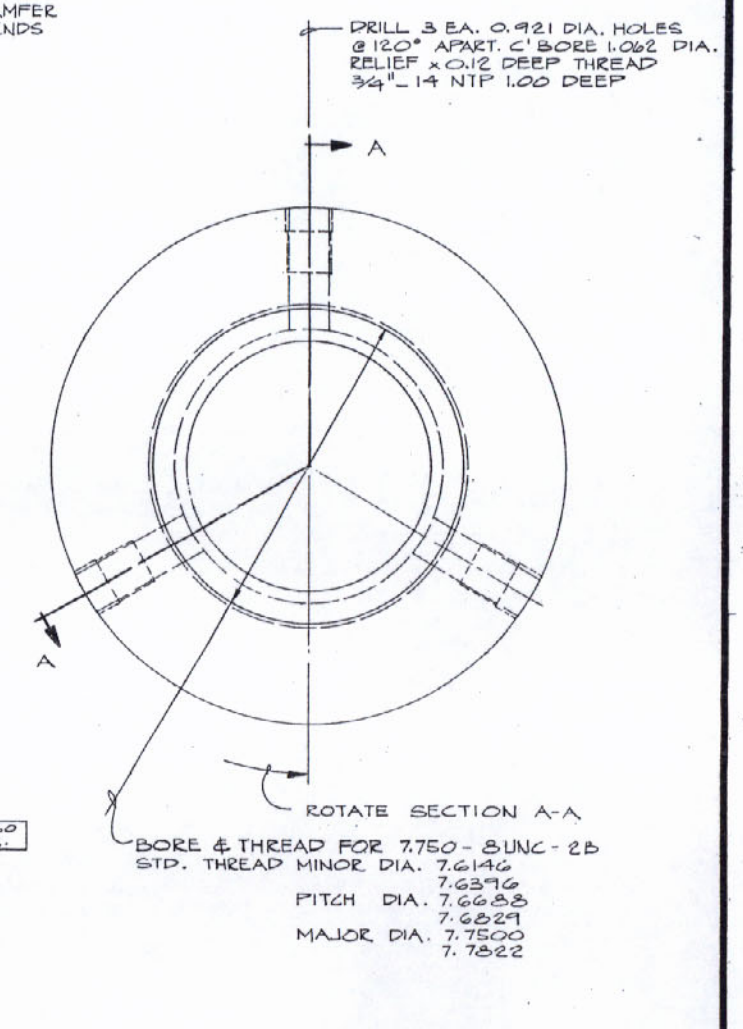

NOTES

RMS SURFACE FINISH
SURFACE WAVINESS
◎ CONCENTRICITY; ⊥ PERPENDICULAR
REFERENCE (SURFACE OR AXIS)
TOLERANCE (TOTAL INDICATED READING)

1. BREAK SHARP EDGES.
2. EACH SOCKET SHALL BE IDENTIFIED BY ONE STAMP ON SEQUENTIAL NUMBER. VENDOR SHALL PROVIDE A LIST INDICATING NUMBERS TO BE ASSIGNED TO EACH SOCKET FOR APPROVAL BY PRESCON. IDENTIFICATION NUMBERS SHALL BE APPROXIMATELY 3/8" TO 1/2" IN SIZE WITH RECESSED DEPTH OF NOT MORE THAN 0.060 IN. OR LESS THAN 0.030 IN. FINAL CONFIGURATION. LOCATE THE IDENTIFICATION NUMBER AS NOTED ON PART, MIDWAY BETWEEN 1.062 DIA. HOLES.
3. TOLERANCES UNLESS OTHERWISE NOTED: 2 DECIMAL PLACES ± 0.030 IN.
   3 " " ± 0.010 IN.
   4 " " ± 0.001 IN.
4. ALL SOCKETS SHALL BE ULTRASONIC TESTED. ACCEPTANCE IN ACCORDANCE WITH APPROVED INSPECTION PROCEDURE.
5. MATERIAL SPECIFICATIONS:
   FORGED SOCKET SHALL CONFORM TO ASTM A-508 EXCEPT AS NOTED BELOW
   ULTIMATE TENSILE STRENGTH 85 KSI
   YIELD POINT (0.2 % OFFSET) 55 KSI
   ELONGATION @ FAILURE (2" LGTH.) 20 %
   NOTCH TOUGHNESS @ 0° F 25 FT. LBS. (CHARPY "V" NOTCH)

SHOP COAT PAINT. (BY PRESCON)
A. REMOVE OILY RESIDUES W/ SOLVENT.
B. SANDBLAST PER SECTION 811.06 OF STD. SPECIFICATIONS.
C. SPRAY PAINT SAME DAY W/ ONE FULL COAT OF "INORGANIC ZINC PRIMER," MIN. DRY THICKNESS 2.5 MILS.
D. REF. PAINTED SURFACES
E. PRIMER SHALL CONFORM TO SUBSECTION 1008.03 LOUISIANA STANDARD SPECIFICATIONS, AS MANUFACTURED BY MOBIL CHEMICAL CO. OR EXXON CHEMICAL CO.

APPROVED
For Design, Material & Workmanship
Frankland & Lienhard
By I.V. 4-21-81

APPROVED
FOR SIZE OF MATERIAL AND STRENGTH OF CONNECTIONS
BRIDGE DESIGN SECTION
LOUISIANA
By REB BRIDGE DESIGN ENGINEER
Date MAY 8 1981

RECEIVED APR 7 1981

MAR 30 1981

NO.	DATE	REVISION	
1	10/15/78	PAINT PRIMER	M.T.

THE PRESCON CORPORATION
8918 TESORO DRIVE
SAN ANTONIO, TEXAS 78217
(512) 828-6264

Disclosure Notice
This drawing is the exclusive property of The Prescon Corporation and the information shown may not be used nor the drawing reproduced without written permission of The Prescon Corporation.

CONTRACTOR
WILLIAMS BROTHERS CONSTRUCTION CO., INC.
IHI INTERNATIONAL, INC.

ENGINEER
FRANKLAND AND LIENHARD – MODJESKI AND MASTERS

PROJECT
MISSISSIPPI RIVER BRIDGE (LULING)
MAIN RIVER CROSSING SUPERSTRUCTURE
ST. CHARLES PARISH

PROJECT NUMBER	STATE
450-37-02 FAP I-310-4(261)227	LOUISIANA

SOCKET V
DEAD END

JOB NO.	PBX 8001
DRAWN BY	M. TELLEZ
DATE	9-20-78
CHECKED BY	T. CASTELLAN
DATE	9/20/78

DWG NUMBER S-8

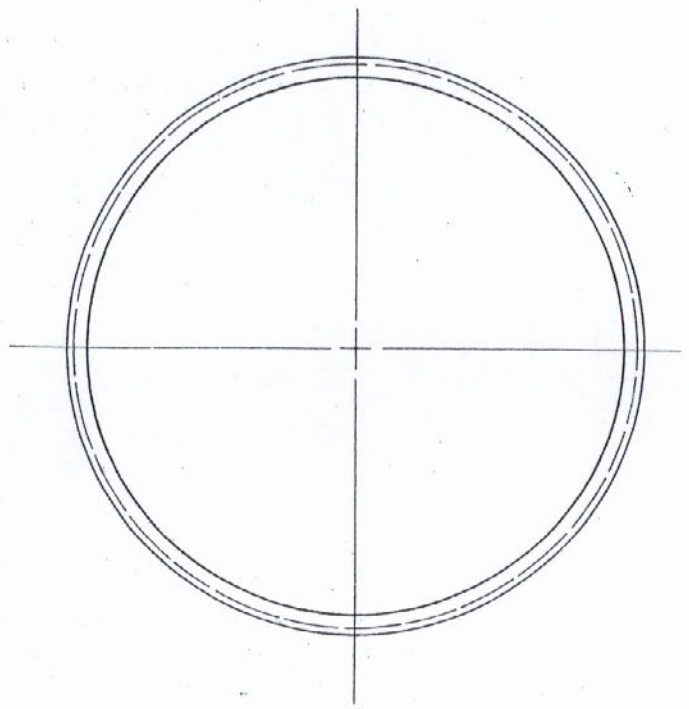

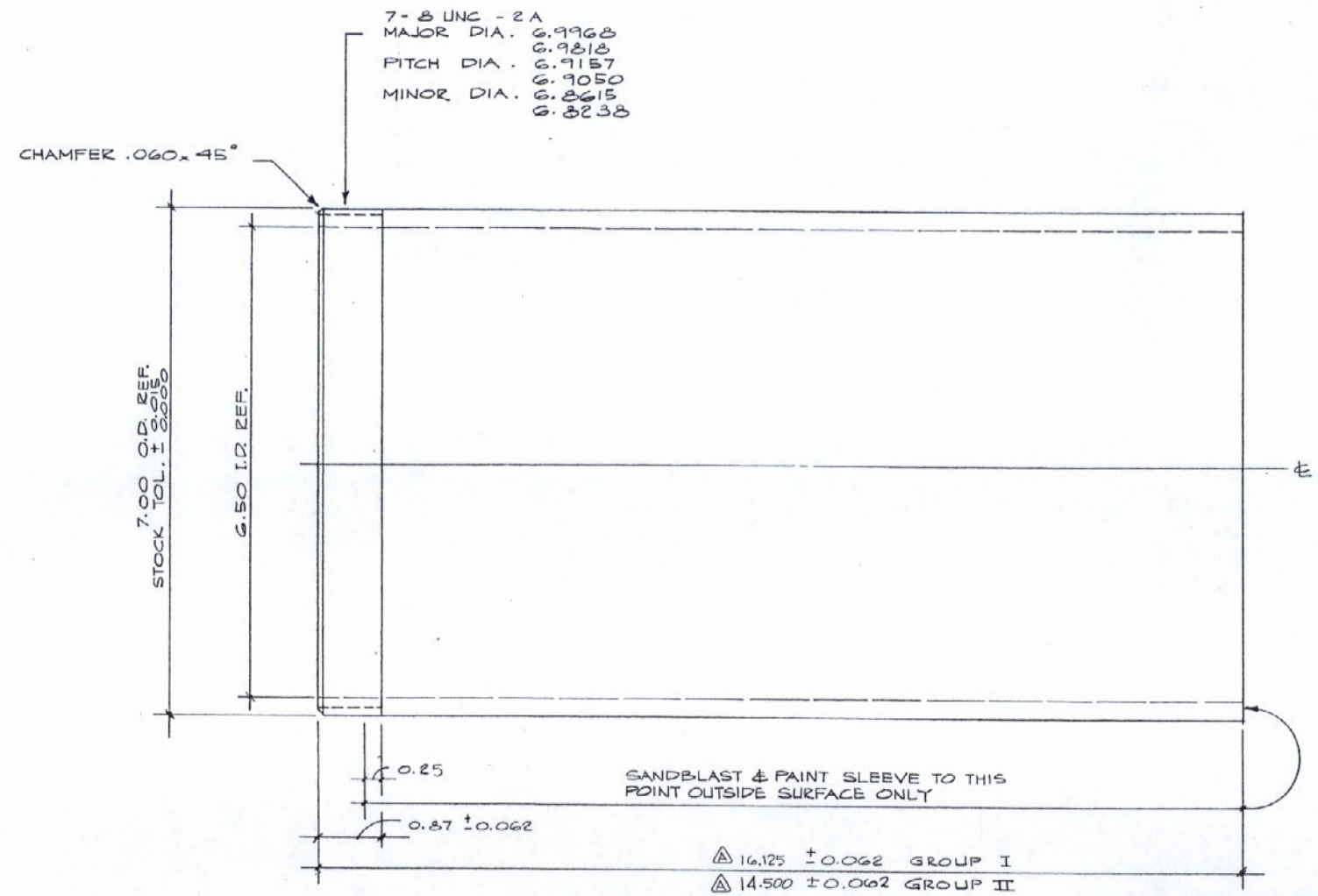

NOTES:

1. BREAK SHARP EDGES.
2. MATERIAL AISI 1018 STEEL TUBING DRAWN OVER MANDREL (D.O.M.) O.D. TOLERANCE $\pm^{0.015}_{0.000}$
3. TOLERANCE ON O.D. REQUIRED TO ENABLE THREADING TUBING - TOLERANCE ON STOCK DIAMETER.
4. SHOP COAT PAINT
   A. REMOVE OILY RESIDUES W/ SOLVENT.
   B. SANDBLAST PER SECTION 811.06 OF STD. SPECIFICATIONS.
   C. SPRAY PAINT SAME DAY W/ ONE FULL COAT OF "INORGANIC ZINC SILICATE PAINT", MIN. DRY THICKNESS 2.5 MILS.

SLEEVE FOR ANCHOR GROUP I & II

SCALE: 1" = 1"

APPROVED
For Design, Material & Workmanship

Frankland & Lienhard
By I.V. 4-21-81

APPROVED
FOR SIZE OF MATERIAL AND STRENGTH OF CONNECTIONS
BRIDGE DESIGN SECTION
LOUIS CARRO BRIDGE DESIGN ENGINEER
By RFB Date MAY 6 1981

RECEIVED APR 7 1981

MAR 30 1981

NO.	DATE	REVISION	BY
A	11-15-79	CHANGED LENGTH	VFH

THE PRESCON CORPORATION
8913 TESORO DRIVE
SAN ANTONIO, TEXAS 78217
(512) 828-6264

Disclosure Notice
This drawing is the exclusive property of The Prescon Corporation and the information shown may not be used nor the drawing reproduced without written permission of The Prescon Corporation.

CONTRACTOR
WILLIAMS BROTHERS CONSTRUCTION CO., INC.
IHI INTERNATIONAL, INC.

ENGINEER
FRANKLAND AND LIENHARD - MODJESKI AND MASTERS

PROJECT
MISSISSIPPI RIVER BRIDGE (LULING)
MAIN RIVER CROSSING SUPERSTRUCTURE
ST. CHARLES PARISH

PROJECT NUMBER	STATE

SLEEVE FOR ANCHOR
GROUP I & II

JOB NO. PBX 8001
DRAWN BY M. TELLEZ
DATE 9-29-78
CHECKED BY T. CASTELLAW
DATE 10/23/79

DWG NUMBER
SA-1

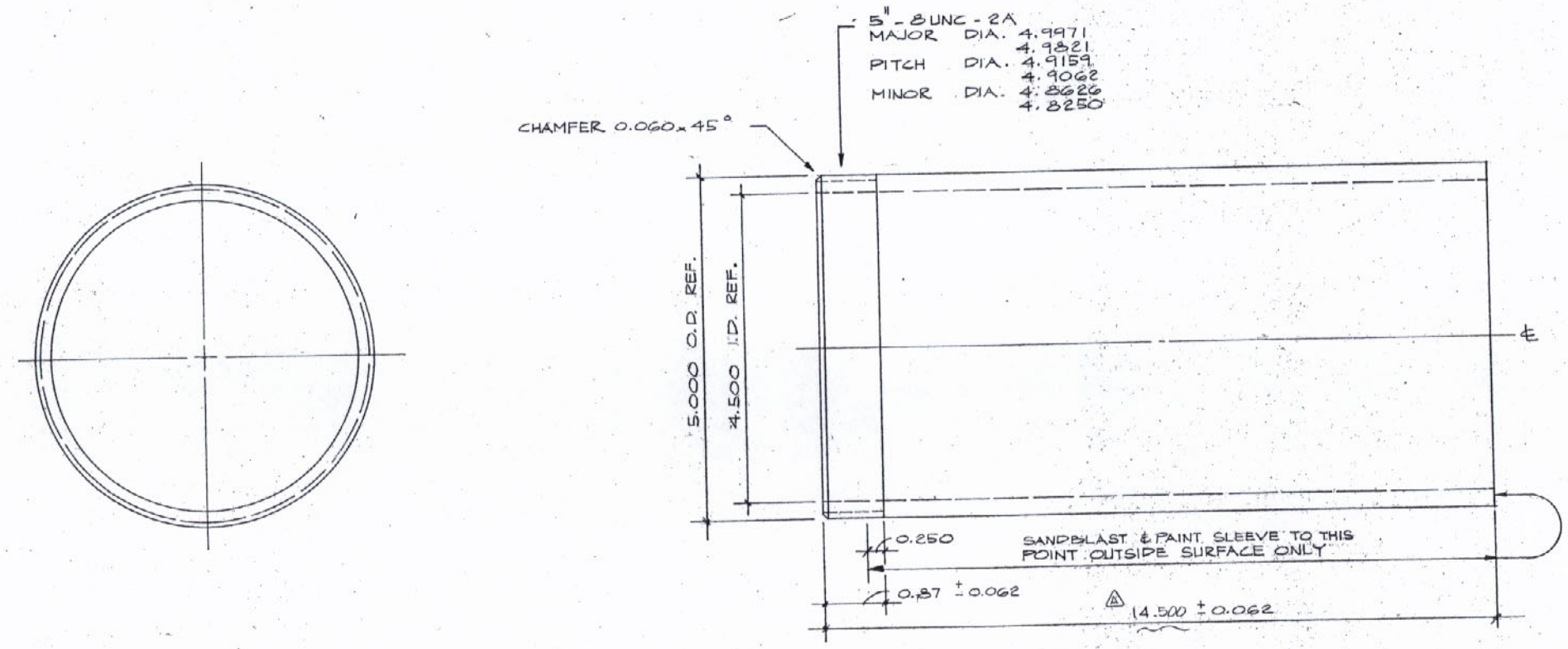

SLEEVE FOR ANCHOR GROUP IV

SCALE: 1" = 1"

NOTES.

1. BREAK SHARP EDGES
2. MATERIAL - AISI 1018 STEEL TUBING DRAWN ± 0.015 OVER MANDREL (D.O.M.) O.D. TOLERANCE ± 0.000
3. TOLERANCE ON O.D. REQUIRED TO ENABLE THREADING TUBING - TOLERANCE ON STOCK DIAMETER.
4. SHOP COAT PAINT
   A. REMOVE OILY RESIDUES W/ SOLVENT.
   B. SANDBLAST PER SECTION 811.06 OF STD. SPECIFICATIONS.
   C. SPRAY PAINT SAME DAY W/ ONE FULL COAT OF "INORGANIC ZINC SILICATE PAINT" MIN. DRY THICKNESS 2.5 MILS.

APPROVED
For Design, Material & Workmanship
Frankland & Lienhard
By I.V. 4-21-81

APPROVED
FOR SIZE OF MATERIAL AND STRENGTH OF CONNECTIONS
BRIDGE DESIGN SECTION
LOUIS REB BRIDGE DESIGN ENGINEER
By _____ Date MAY 6 1981

RECEIVED
APR 7 1981
MAR 30 1981

NO.	DATE	REVISION	BY
A	11-15-79	CHANGED LENGTH	KEH

THE PRESCON CORPORATION
8918 TESORO DRIVE
SAN ANTONIO, TEXAS 78217
(512) 828-6264

Disclosure Notice
This drawing is the exclusive property of The Prescon Corporation and the information shown may not be used nor the drawing reproduced without written permission of The Prescon Corporation.

CONTRACTOR: WILLIAMS BROTHERS CONSTRUCTION CO., INC.
IHI INTERNATIONAL, INC.

ENGINEER: FRANKLAND AND LIENHARD – MODJESKI AND MASTERS

PROJECT: MISSISSIPPI RIVER BRIDGE (LULING)
MAIN RIVER CROSSING SUPERSTRUCTURE
ST. CHARLES PARISH

PROJECT NUMBER: 450-37-02 FAP. I-310-4(35)223
STATE: LOUISIANA

SLEEVE FOR ANCHOR GROUP IV

JOB NO. PBX 8001
DRAWN BY M. TELLEZ
DATE
CHECKED BY TAC
DATE 9/8/79

DWG. NUMBER SA-2
REV. A

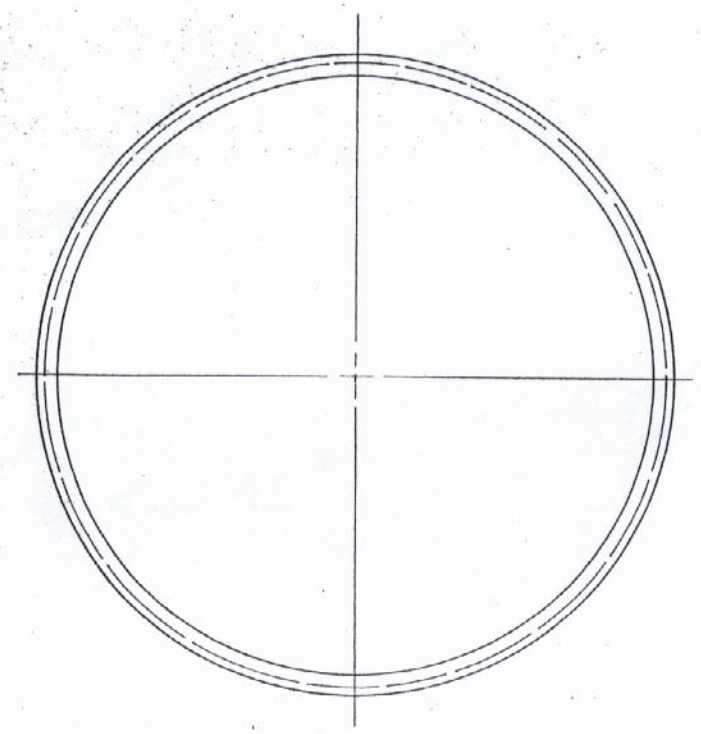

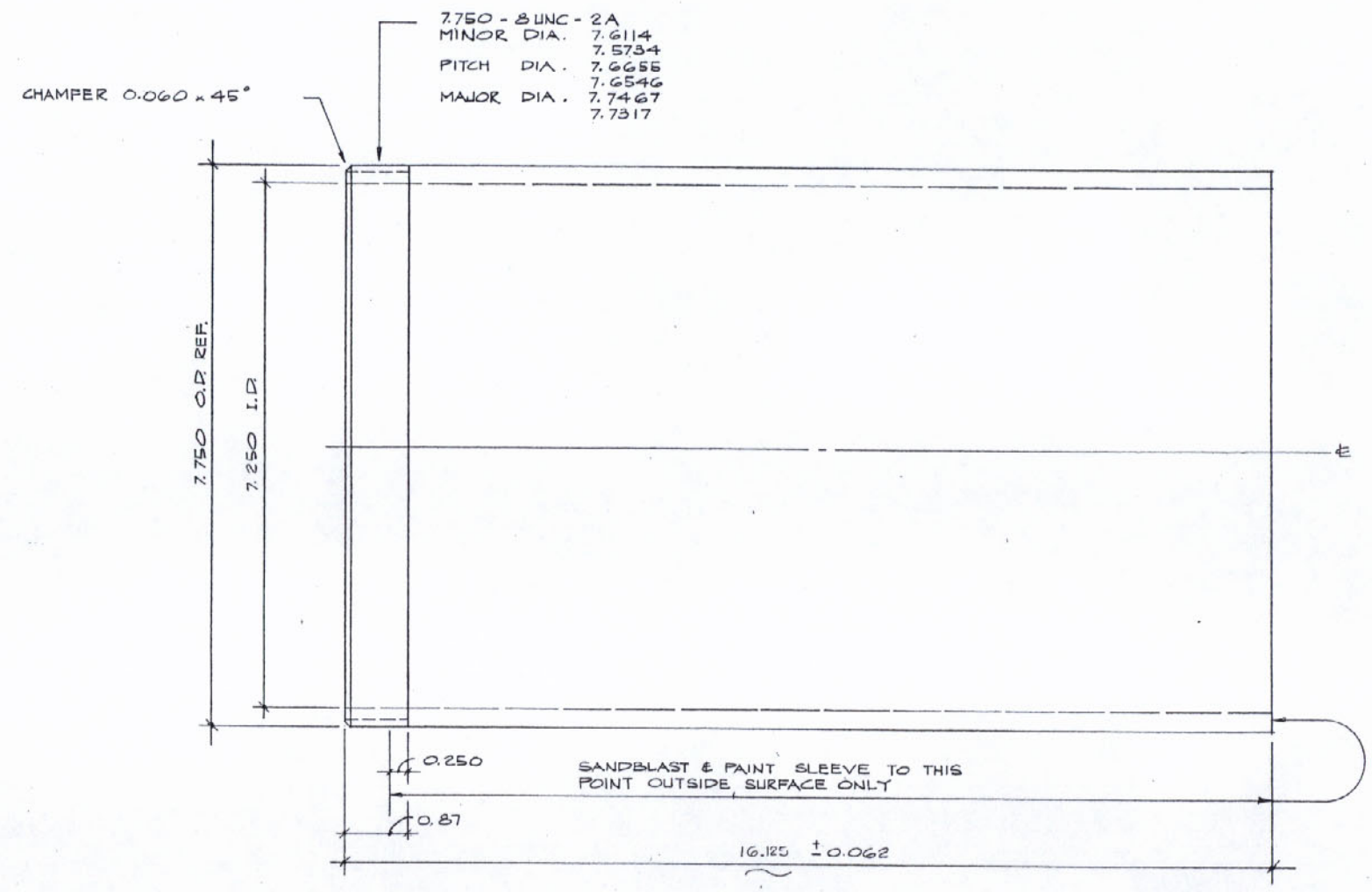

SLEEVE FOR ANCHOR GROUP V

SCALE: 1" = 1"

NOTES

1. BREAK SHARP EDGES
2. MATERIAL - AISI 1018 STEEL TUBING DRAWING OVER MANDREL (D.O.M.) O.D. TOLERANCE $\pm^{0.015}_{0.000}$
3. TOLERANCE ON O.D. REQUIRED TO ENABLE THREADING TUBING - TOLERANCE ON STOCK DIAMETER.
4. SHOP COAT PAINT
   A. REMOVE OILY RESIDUES W/ SOLVENT.
   B. SANDBLAST PER SECTION 811.06 OF STD. SPECIFICATIONS.
   C. SPRAY PAINT SAME DAY W/ ONE FULL COAT OF "INORGANIC ZINC SILICATE PAINT" MIN. DRY THICKNESS 2.5 MILS.

APPROVED
For Design, Material & Workmanship

Frankland & Lienhard
By I.V. 4-21-81

APPROVED
FOR SIZE OF MATERIAL AND STRENGTH OF CONNECTIONS
BRIDGE DESIGN SECTION
LOUISIANA DEPARTMENT OF HIGHWAYS
By REB Date MAY 6 1981
BRIDGE DESIGN ENGINEER

MAR 30 1981

RECEIVED
APR 7 1981

NO.	DATE	REVISION

THE PRESCON CORPORATION
8918 TESORO DRIVE
SAN ANTONIO, TEXAS 78217
(512) 828-6264

Disclosure Notice
This drawing is the exclusive property of The Prescon Corporation and The information shown may not be used nor the drawing reproduced without written permission of The Prescon Corporation.

CONTRACTOR
WILLIAMS BROTHERS CONSTRUCTION CO., INC.
IHI INTERNATIONAL, INC.

ENGINEER
FRANKLAND AND LIENHARD – MODJESKI AND MASTERS

PROJECT
MISSISSIPPI RIVER BRIDGE (LULING)
MAIN RIVER CROSSING SUPERSTRUCTURE
ST. CHARLES PARISH

PROJECT NUMBER	STATE
450-37-02 FAP. I-310-4(35)223	LOUISIANA

SLEEVE FOR ANCHOR GROUP V

JOB No. PBX 8001
DRAWN BY M. TELLEZ
DATE
CHECKED BY M.W. HOBLER
DATE 12-17-79

SA-3

DATE	REVISION DESCRIPTION	REV NO

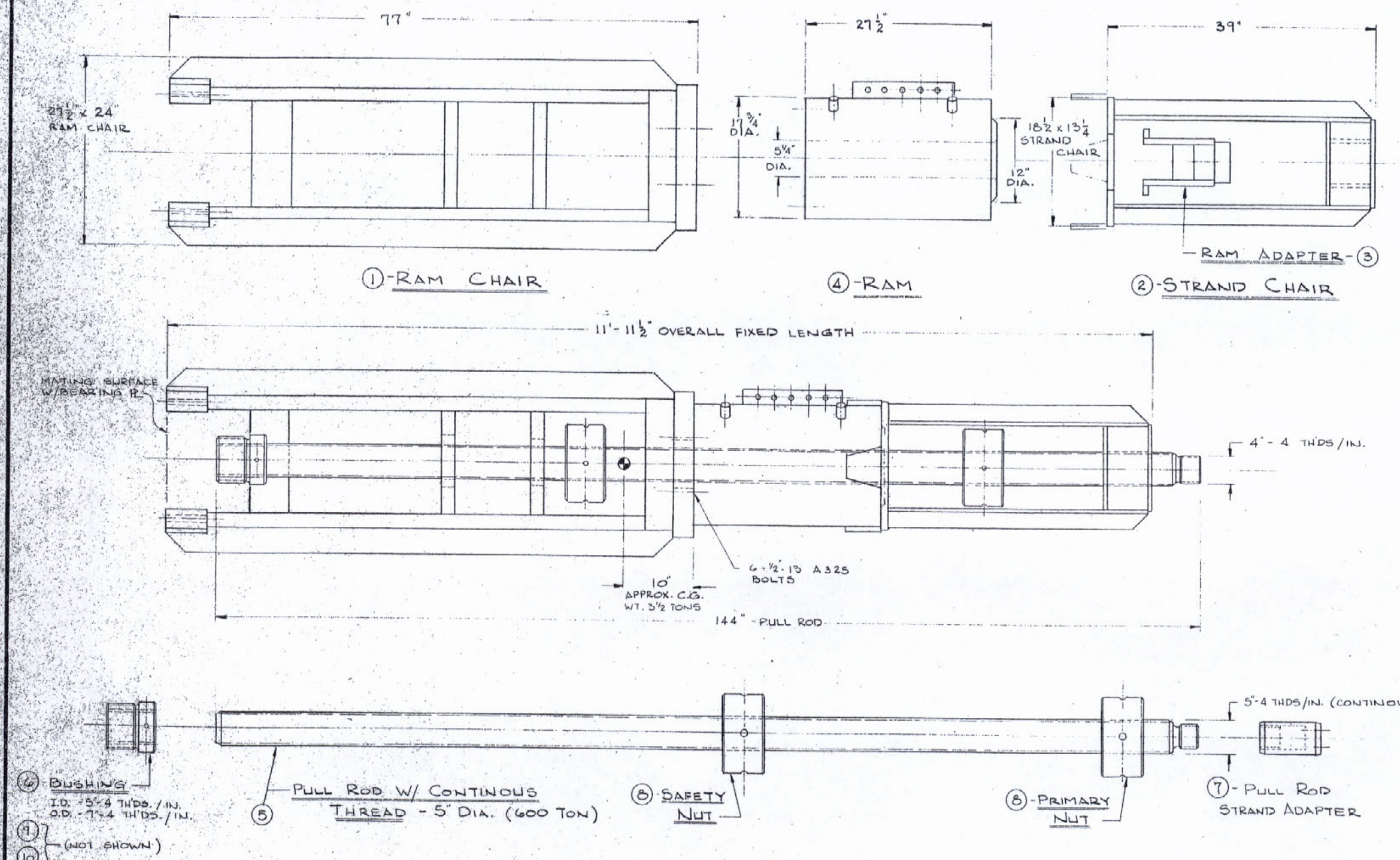

APPROVED
FOR SIZE OF MATERIAL AND STRENGTH OF CONNECTIONS
BRIDGE DESIGN SECTION
LOUIS A. CARRIDO BRIDGE DESIGN ENGINEER
By REB Date MAY 8 1981

APPROVED
For Design, Material & Workmanship
Frankland & Lienhard
By I.V. 4-21-81

RECEIVED APR 7 1981

MAR 30 1981

ITEM No.	QTY. REQ'D.	MATERIAL	MATERIAL SIZE	SPEC.	DESCRIPTION	DRAWING No.
10	1				BUSHING	PWE-16 REV. C
9	1				BUSHING	PWE-14 REV. B
8	2		5"-4 THDS/IN		NUT	AFC-18 REV. C
7	1				PULL ROD ADAPTER	AFC-13 REV. C
6	1				BUSHING	PWE-14 REV. B
5	1		5"-4 THDS/IN		PULL ROD	PWE-13 REV. A
4	1				RAM (RJ-500-12)	31160
3	1				RAM ADAPTER	AFC-12 REV. G
2	1				STRAND CHAIR	AFC-7 REV. F
1	1				RAM CHAIR	PWE-2 REV. D

Tolerances: UNLESS NOTED
FRACTION ± 1/16
DECIMAL .XXX ± .010
.XX ± .030
ANGLE ± .5°

MAT'L WT. OF SIZE | FINISHED WT. APPROX. 6500 | MAX. & MIN. HARDNESS
NEXT TREAT | FINISH | NEXT ASSEMBLY

Freyssinet PRESCON

THE PRESCON CORPORATION
8918 TESORO DRIVE
SAN ANTONIO, TEXAS
78217
a freyssinet international company

Disclosure Notice
This drawing is the exclusive property of The Prescon Corporation and the information shown may not be used nor the drawing reproduced without written permission of The Prescon Corporation.

CONTRACTOR
WILLIAMS BROTHERS CONSTRUCTION CO., INC.
IHI INTERNATIONAL, INC.

ENGINEER
FRANKLAND AND LIENHARD - MODJESKI AND MASTERS

PROJECT
MISSISSIPPI RIVER BRIDGE (LULING)
MAIN RIVER CROSSING SUPERSTRUCTURE
ST. CHARLES PARISH

PROJECT NUMBER | STATE

STRESSING JACK AND PULL ROD ASSEMBLY - 600 TON -

PBX 8001
HÖHN
10 JULY 1979
REIFFERT
8-31-79

S.E.-100

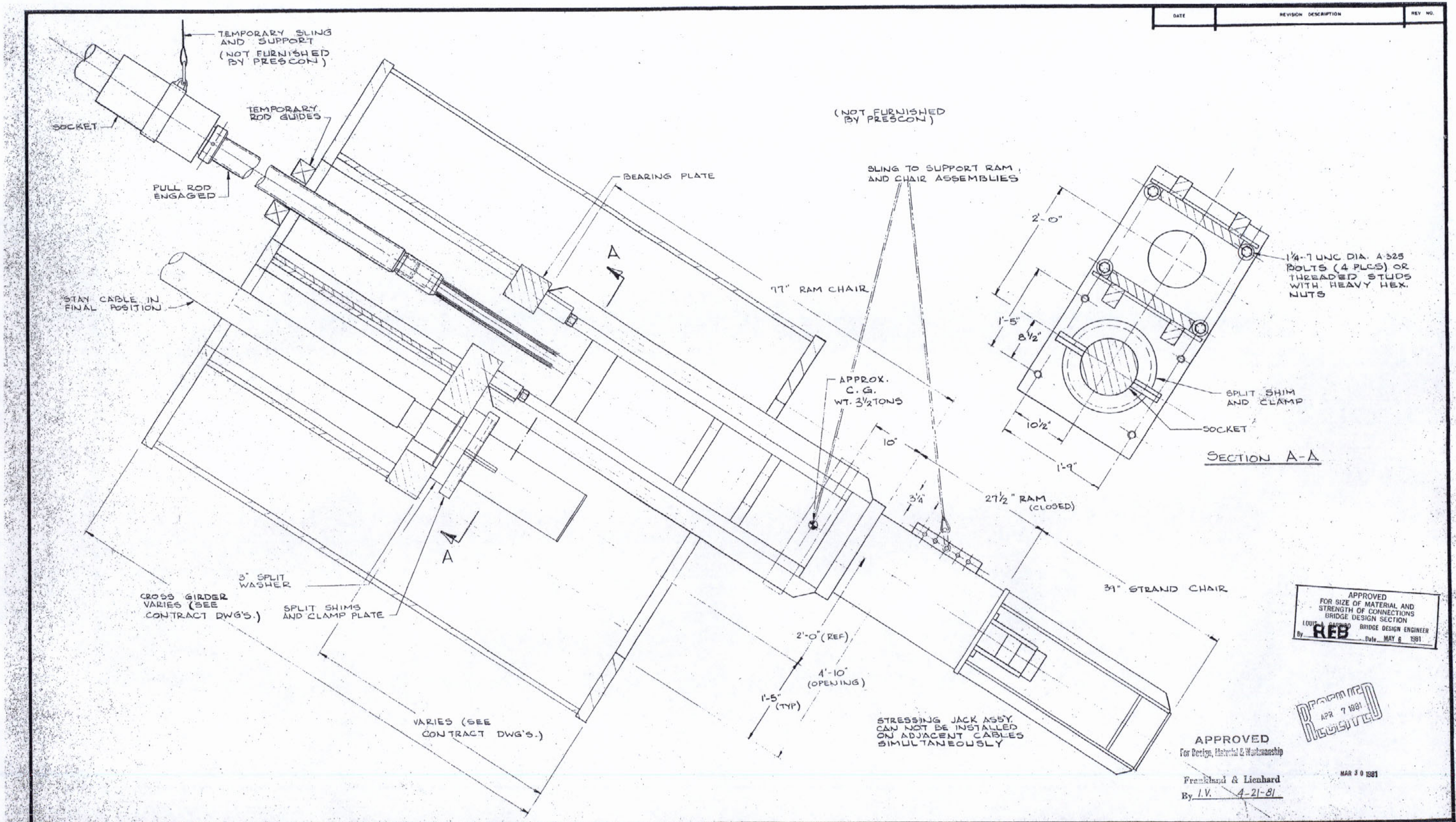

DATE	REVISION DESCRIPTION	REV NO.

APPROVED
FOR SIZE OF MATERIAL AND STRENGTH OF CONNECTIONS
BRIDGE DESIGN SECTION
LOUIS A. GARRIDO BRIDGE DESIGN ENGINEER
By REB Date MAY 6 1981

RECEIVED APR 7 1981

APPROVED
For Design, Material & Workmanship
Frankland & Lienhard
By I.V. 4-21-81

MAR 30 1981

Tolerances UNLESS NOTED: FRACTION ± 1/16; .XXX ± .010; DECIMAL .XX ± .030; ANGLE ± 5°	WELL WET / FINISHED WET / WAX & WIN HARDNESS / HEAT TREAT / FINISH / HEAT ASSEMBLY	Freyssinet PRESCON — THE PRESCON CORPORATION, 8918 TESORO DRIVE, SAN ANTONIO, TEXAS 78217 — a freyssinet international company	Disclosure Notice: This drawing is the exclusive property of The Prescon Corporation and the information shown may not be used nor the drawing reproduced without written permission of The Prescon Corporation.

CONTRACTOR: WILLIAMS BROTHERS CONSTRUCTION CO., INC. IHI INTERNATIONAL, INC.

ENGINEER: FRANKLAND AND LIENHARD – MODJESKI AND MASTERS

PROJECT: MISSISSIPPI RIVER BRIDGE (LULING) MAIN RIVER CROSSING SUPERSTRUCTURE ST. CHARLES PARISH

PROJECT NUMBER	STATE
450-37-02 FAP 1-310-4(35)223	LOUISIANA

POSITION: 1 - JACK ASSEMBLY INSTALLED

-600 TON-

JOB NO.	PBX 8001
DRAWN BY	HOHN
DATE	11 JULY 1979
CHECKED BY	REIFFERT
DATE	8-31-79

SE-101 REV.-0-

DATE	REVISION DESCRIPTION	REV. NO.

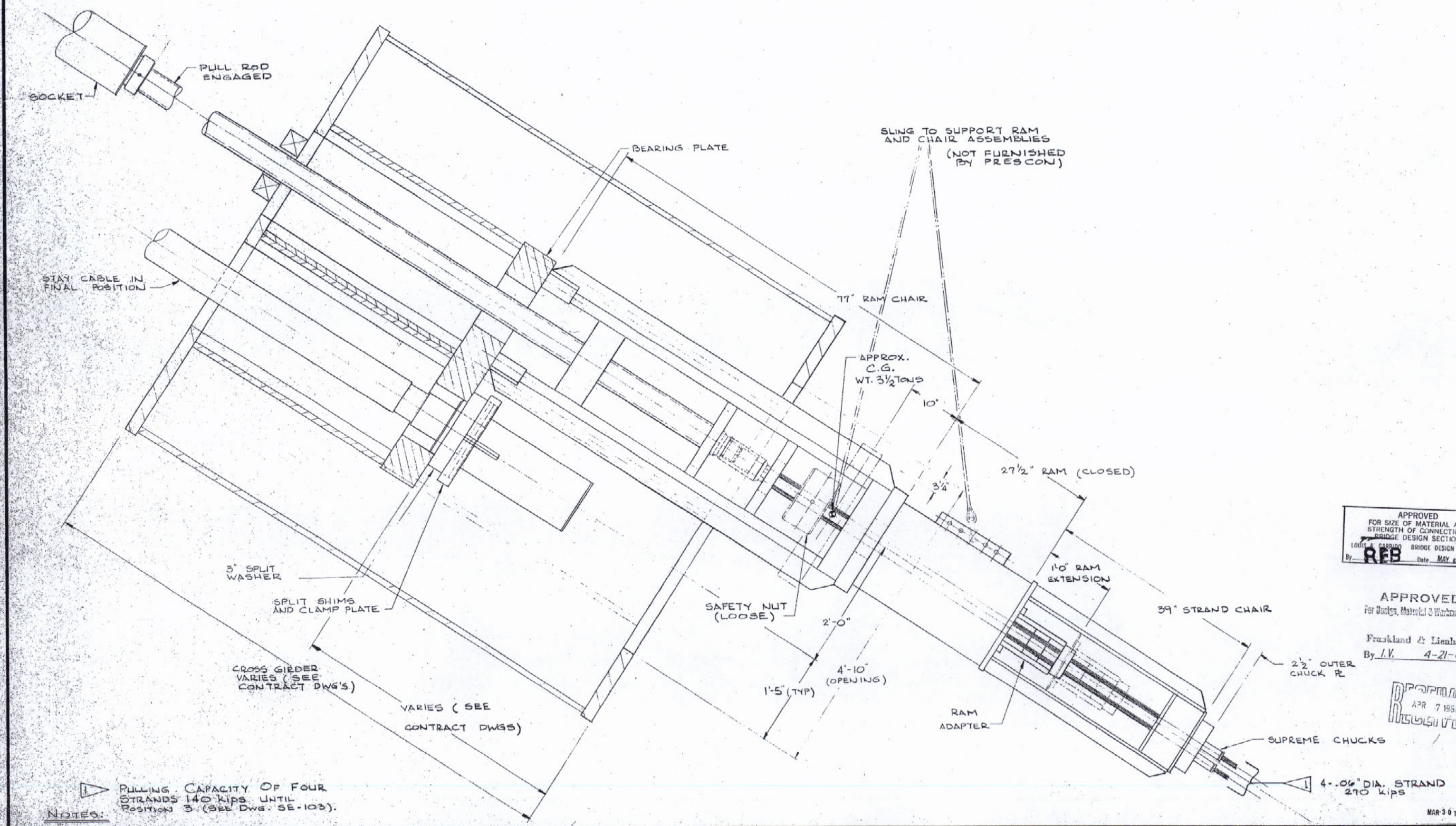

APPROVED
FOR SIZE OF MATERIAL AND STRENGTH OF CONNECTIONS
BRIDGE DESIGN SECTION
LOUIS A. GARRIDO BRIDGE DESIGN ENGINEER
By RFB Date MAY 6 1981

APPROVED
For Design, Material & Workmanship
Frankland & Lienhard
By I.V. 4-21-81

RECEIVED APR 7 1981

MAR 30 1981

NOTES:

1 PULLING CAPACITY OF FOUR STRANDS 140 kips UNTIL POSITION 3 (SEE DWG. SE-103).

Tolerances: INLESS NOTED FRACTION ± 1/16 XXX ± .010 DECIMAL XX ± .030 ANGLE ± .5°	MAT'L WGT. OR SIZE / FINISHED WGT. / MAX & MIN HARDNESS / HEAT TREAT / FINISH / NEXT ASSEMBLY	THE PRESCON CORPORATION 8918 TESORO DRIVE SAN ANTONIO, TEXAS 78217 Freyssinet PRESCON a freyssinet international company	Disclosure Notice This drawing is the exclusive property of The Prescon Corporation and the information shown may not be used nor the drawing reproduced without written permission of The Prescon Corporation.

CONTRACTOR
WILLIAMS BROTHERS CONSTRUCTION CO., INC.
IHI INTERNATIONAL, INC.

ENGINEER
FRANKLAND AND LIENHARD - MODJESKI AND MASTERS

PROJECT
MISSISSIPPI RIVER BRIDGE (LULING)
MAIN RIVER CROSSING SUPERSTRUCTURE
ST. CHARLES PARISH

PROJECT NUMBER	STATE
450-37-02 FAP. 1-310-4(35)223	LOUISIANA

POSITION: 2 - INITIAL TENSIONING
-600 TON-

JOB NO.	PBX 8001
DRAWN BY	HOHN
DATE	11 JULY 1979
CHECKED BY	REIFFERT
DATE	8-31-77
SCALE	1/8" = 1"

DWG NUMBER: S.E-102 REV-0

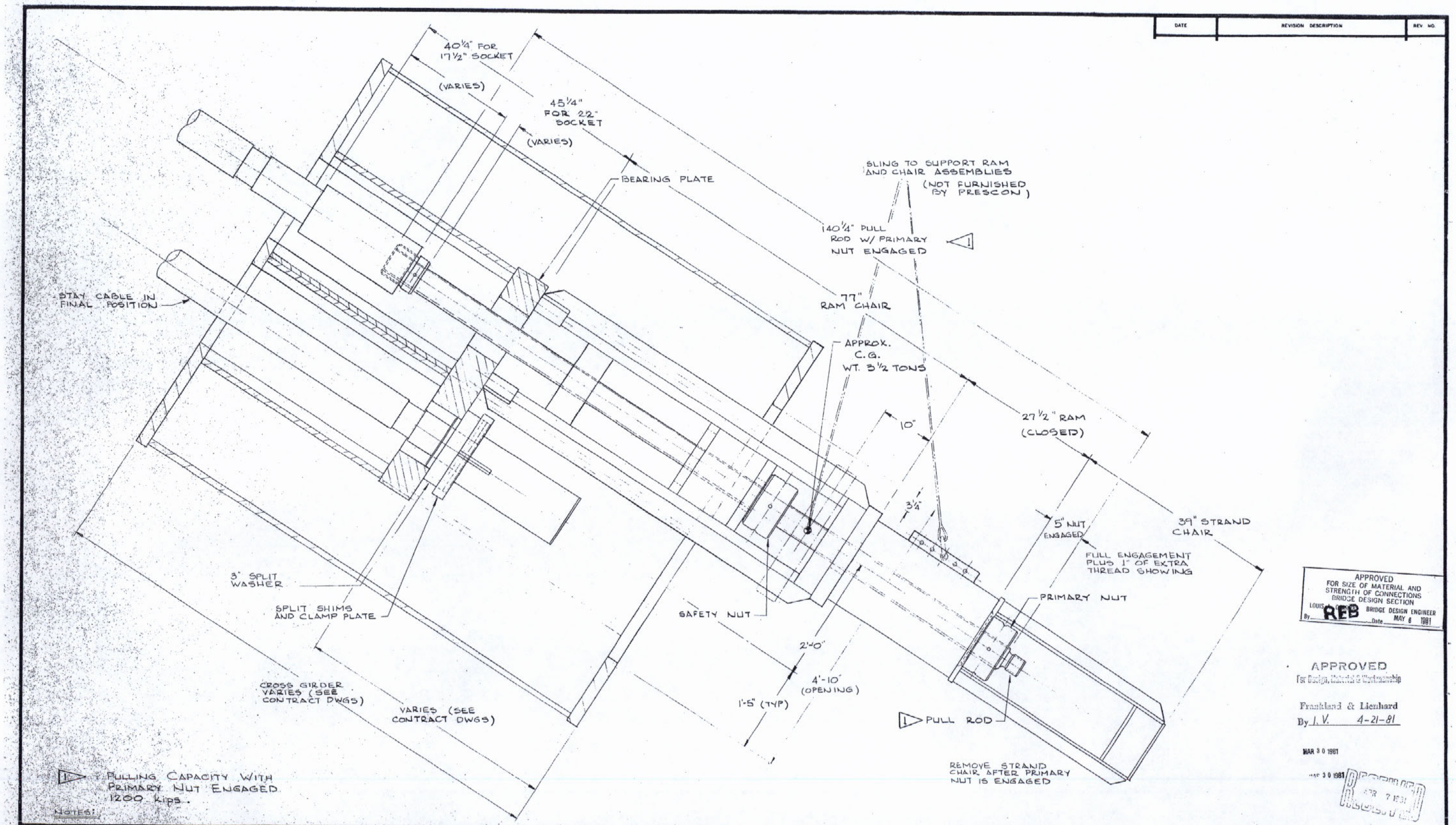

1 PULLING CAPACITY WITH PRIMARY NUT ENGAGED 1200 kips.

NOTES:

DATE	REVISION DESCRIPTION	REV. NO.

APPROVED
FOR SIZE OF MATERIAL AND STRENGTH OF CONNECTIONS
BRIDGE DESIGN SECTION
LOUIS A. CONCHA BRIDGE DESIGN ENGINEER
By REB Date MAY 6 1981

APPROVED
For Design, Material & Workmanship
Frankland & Lienhard
By I. V. 4-21-81

MAR 30 1981

MAR 30 1981

RECEIVED APR 7 1981

Tolerances UNLESS NOTED
FRACTION ± 1/16
.XXX ± .010
DECIMAL .XX ± .030
ANGLE ± 5°

MAT'L WGT. OF SIZE | FINISHED WGT | MAX & MIN HARDNESS
HEAT TREAT | FINISH | HEAT ASSEMBLY

Freyssinet PRESCON

THE PRESCON CORPORATION
8918 TESORO DRIVE
SAN ANTONIO, TEXAS
78217
a freyssinet international company

Disclosure Notice
This drawing is the exclusive property of The Prescon Corporation and the information shown may not be used nor the drawing reproduced without written permission of The Prescon Corporation

CONTRACTOR
WILLIAMS BROTHERS CONSTRUCTION CO., INC.
IHI INTERNATIONAL, INC.

ENGINEER
FRANKLAND AND LIENHARD – MODJESKI AND MASTERS

PROJECT
MISSISSIPPI RIVER BRIDGE (LULING)
MAIN RIVER CROSSING SUPERSTRUCTURE
ST. CHARLES PARISH

PROJECT NUMBER	STATE

POSITION: 3 - PULL ROD ENGAGED WITHIN PRIMARY NUT

PBX 8001
HÖHN PTL
11 JULY 1979
REIFFERT
8-31-79

SE-103

DATE	REVISION DESCRIPTION	REV. NO.

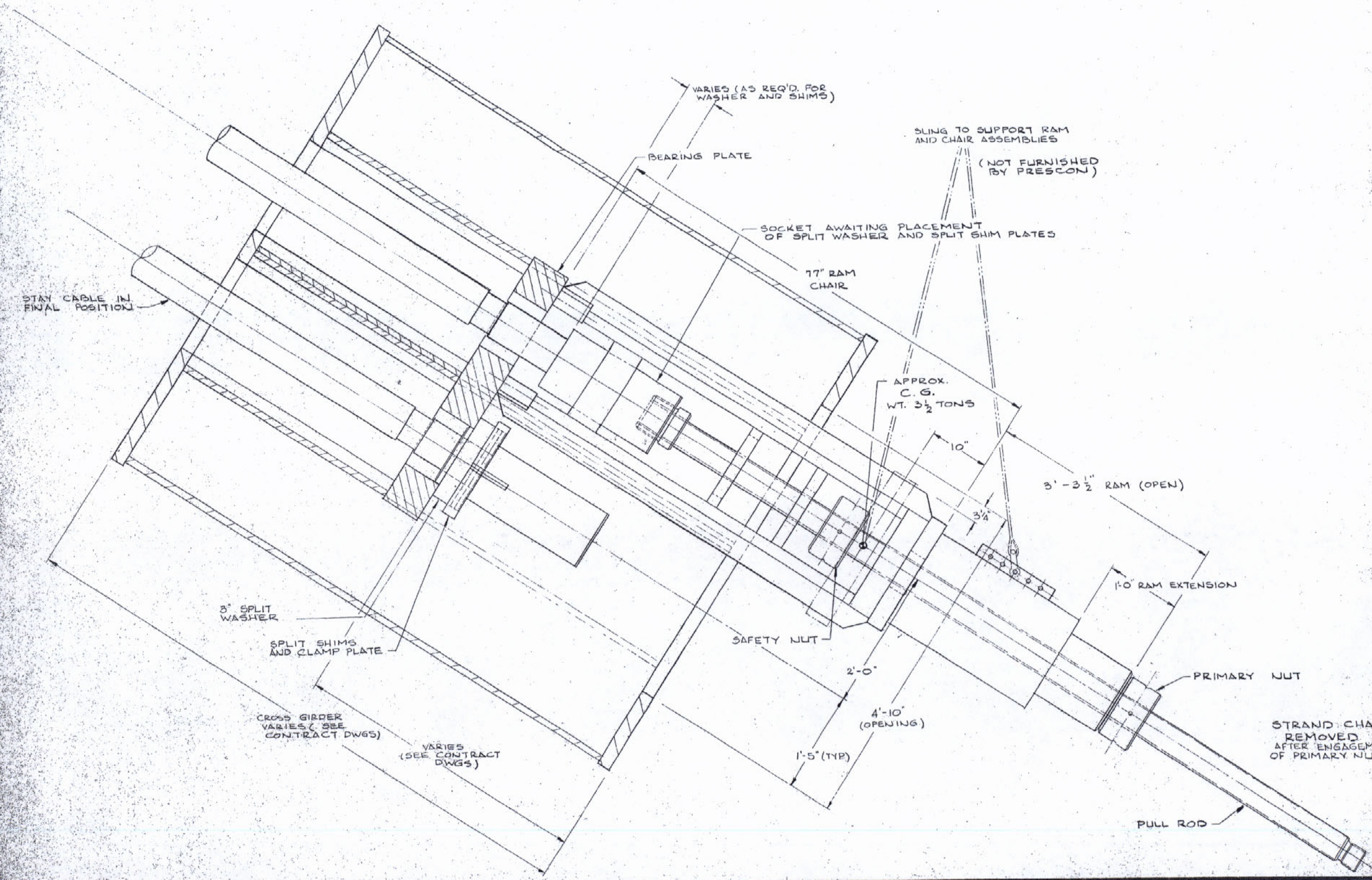

APPROVED
FOR SIZE OF MATERIAL AND STRENGTH OF CONNECTIONS
BRIDGE DESIGN SECTION
LOUIS A. [illegible] BRIDGE DESIGN ENGINEER
By REB Date MAY 6 1981

APPROVED
For Design, Material & Workmanship
Frankland & Lienhard
By I.V. 4-21-81

MAR 30 1981
RECEIVED APR 7 1981

Tolerances UNLESS NOTED FRACTION ± 1/16 .XXX ± .010 DECIMAL .XX ± .030 ANGLE ±	MAT'L WT. IN SIZE / FINISHED WGT. / MAX & MIN HARDNESS / HEAT TREAT / FINISH / HEAT ASSEMBLY	Freyssinet PRESCON — THE PRESCON CORPORATION 8918 TESORO DRIVE SAN ANTONIO, TEXAS 78217	Disclosure Notice This drawing is the exclusive property of The Prescon Corporation and the information shown may not be used nor the drawing reproduced without written permission of The Prescon Corporation

CONTRACTOR
WILLIAMS BROTHERS CONSTRUCTION CO., INC.
IHI INTERNATIONAL, INC.

ENGINEER
FRANKLAND AND LIENHARD - MODJESKI AND MASTERS

PROJECT
MISSISSIPPI RIVER BRIDGE (LULING)
MAIN RIVER CROSSING SUPERSTRUCTURE
ST. CHARLES PARISH

PROJECT NUMBER	STATE
450-37-02 FAP 1-310-4(35)223	LOUISIANA

POSITION: 4 - SOCKET IN FINAL POSITION
-600 TON-

JOB NO. PBX 8001	DWG. NUMBER
DRAWN BY HOHN	SE-104
DATE 11 JULY 1979	REV. -0-
CHECKED BY REIFFERT	
DATE 8-31-79	
SCALE 1/8" = 1'	

DATE	REVISION DESCRIPTION	REV. NO.

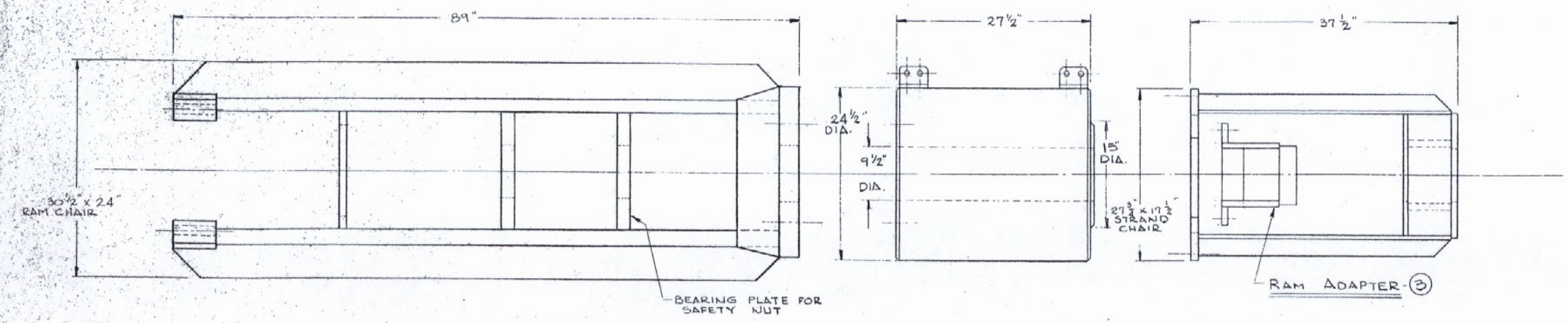

① - RAM CHAIR ④ - RAM ② - STRAND CHAIR

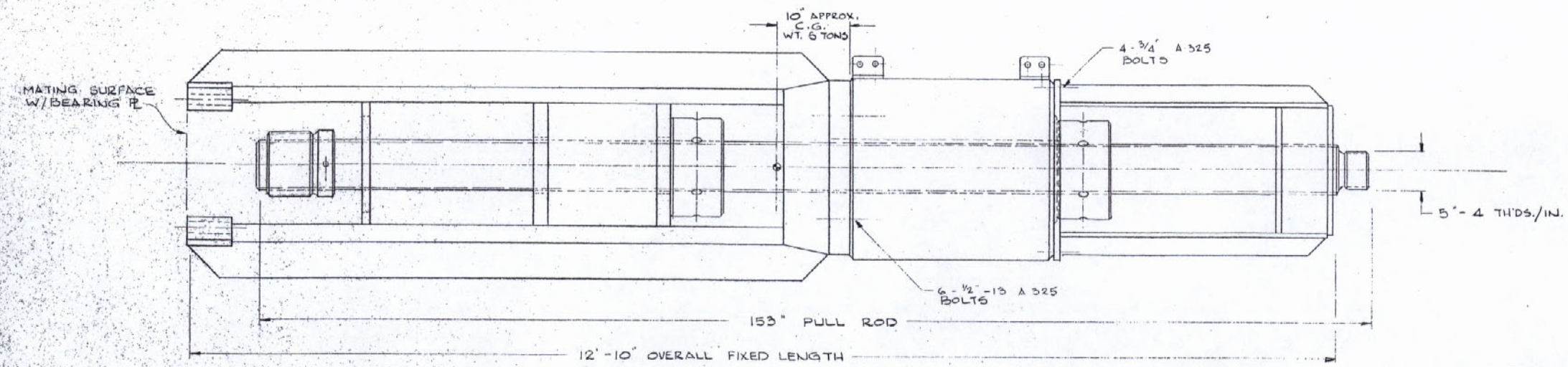

APPROVED
FOR SIZE OF MATERIAL AND STRENGTH OF CONNECTIONS
BRIDGE DESIGN SECTION
LOUIS A. GARBIDO BRIDGE DESIGN ENGINEER
By RFB Date MAY 8 1981

APPROVED
For Design, Material & Workmanship
Frankland & Lienhard
By I.V. 4-21-81
MAR 30 1981

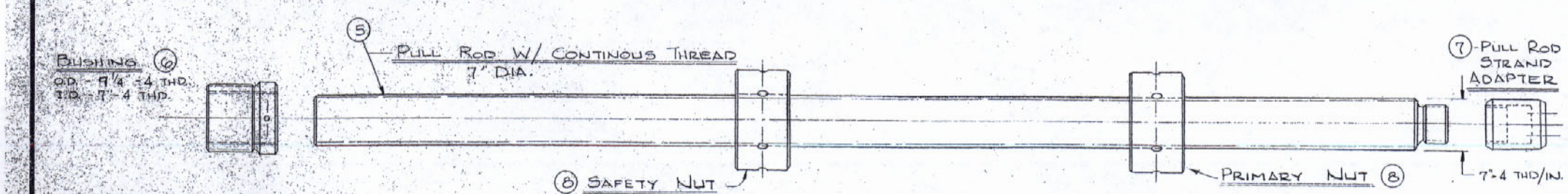

ITEM No.	NO. REQD	MATERIAL	MATERIAL SIZE	REQ.	DESCRIPTION	DRAWING No.
8	2		7"-4 THDS/IN		NUT	PWE-11 REV A
7	1				PULL ROD ADAPTER	PWE-6 REV B
6	1				BUSHING	PWE-9 REV C
5	1		7-4 THDS/IN		PULL ROD	PWE-10 REV A
4	1				RAM (RJ-1000-12)	31257
3	1				RAM ADAPTER	PWE-7 REV B
2	1				STRAND CHAIR	PWE-5 REV C
1	1				RAM CHAIR	PWE-1 REV E

Tolerances UNLESS NOTED FRACTIONS ± 1/16 XXX ± .010 XX ± .030 ANGLE ± 5°

MATL. WGT. IN SIZE | FINISHED WGT. APPROX. 10,000 | MAX. & MIN. HARDNESS | HEAT TREAT | FINISH | NEXT ASSEMBLY

Freyssinet PRESCON

THE PRESCON CORPORATION
8918 TESORO DRIVE
SAN ANTONIO, TEXAS
78217
a freyssinet international company

Disclosure Notice
This drawing is the exclusive property of The Prescon Corporation and the information shown may not be used nor the drawing reproduced without written permission of The Prescon Corporation.

CONTRACTOR
WILLIAMS BROTHERS CONSTRUCTION CO., INC.
IHI INTERNATIONAL, INC.

ENGINEER
FRANKLAND AND LIENHARD – MODJESKI AND MASTERS

PROJECT
MISSISSIPPI RIVER BRIDGE (LULING)
MAIN RIVER CROSSING SUPERSTRUCTURE
ST. CHARLES PARISH

PROJECT NUMBER	STATE
450-32-02 FAP 1-310-6(36)223	LOUISIANA

STRESSING JACK AND PULL ROD ASSEMBLY – 1000 TON –

PBX 8001
HSHJ 9 JULY 1979
REIFFERT 8-31-79

SE-105
REV-0-

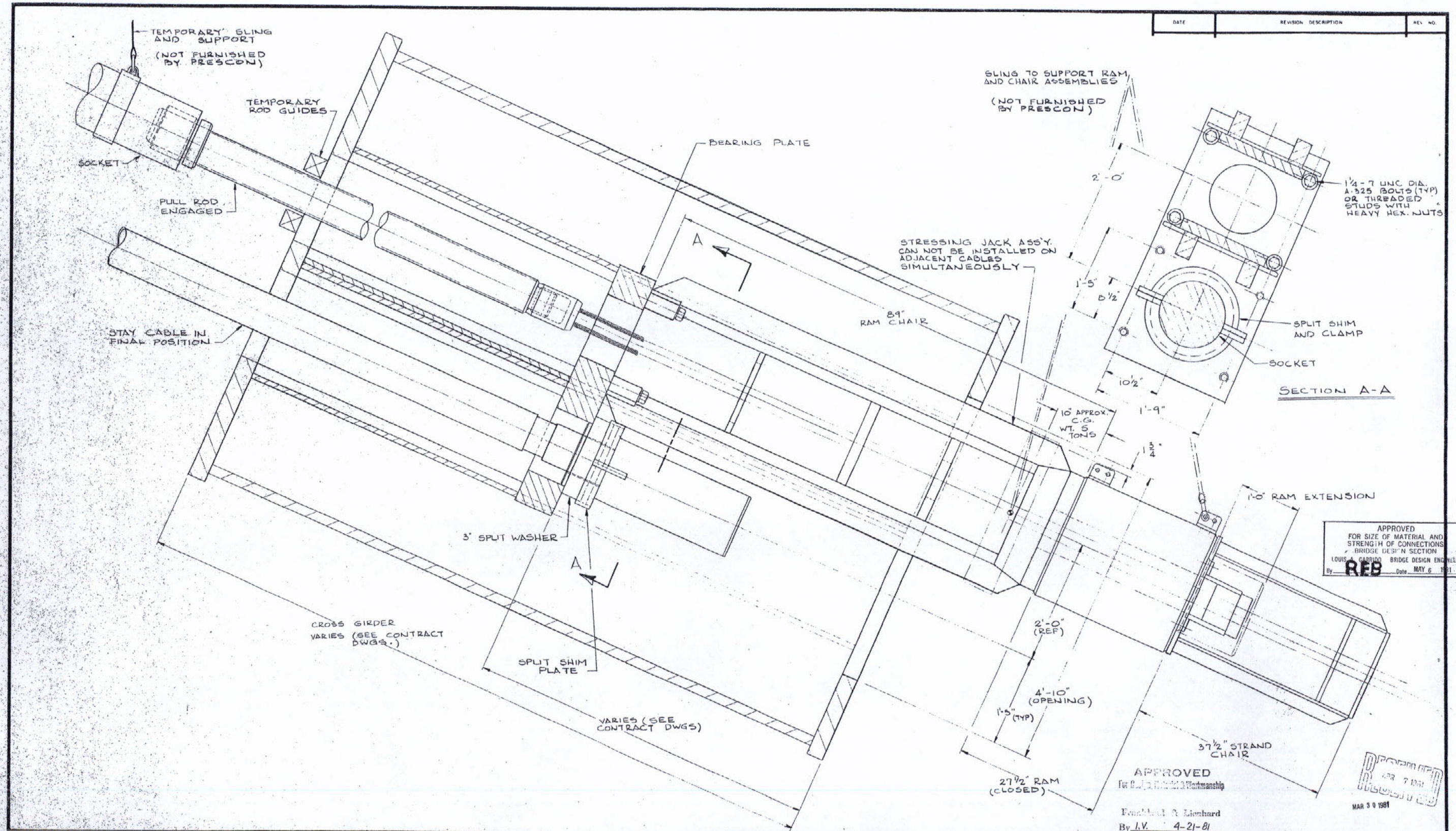

DATE	REVISION DESCRIPTION	REV. NO.

Tolerances UNLESS NOTED
FRACTION ± 1/16
DECIMAL .XXX ± .010
.XX ± .030
ANGLE ± 5°

MAT'L WGT. OF SIZE | FINISHED WGT. | MAX & MIN HARDNESS
HEAT TREAT | FINISH | NEXT ASSEMBLY

Freyssinet PRESCON

THE PRESCON CORPORATION
8918 TESORO DRIVE
SAN ANTONIO, TEXAS
78217
a freyssinet international company

Disclosure Notice
This drawing is the exclusive property of The Prescon Corporation and the information shown may not be used nor the drawing reproduced without written permission of The Prescon Corporation.

CONTRACTOR
WILLIAMS BROTHERS CONSTRUCTION CO., INC.
IHI INTERNATIONAL, INC.

ENGINEER
FRANKLAND AND LIENHARD – MODJESKI AND MASTERS

PROJECT
MISSISSIPPI RIVER BRIDGE (LULING)
MAIN RIVER CROSSING SUPERSTRUCTURE
ST. CHARLES PARISH

PROJECT NUMBER	STATE
450-37-02 FAP. I-310-4(35)223	LOUISIANA

POSITION : 1 - JACK ASS'Y. INSTALLED
—1000 TON—

PBX 8001
HÖHN PTL
9 JULY 1979
REIFFERT
8-31-79
SCALE: 1/8" = 1"

SE 106
REV-0-

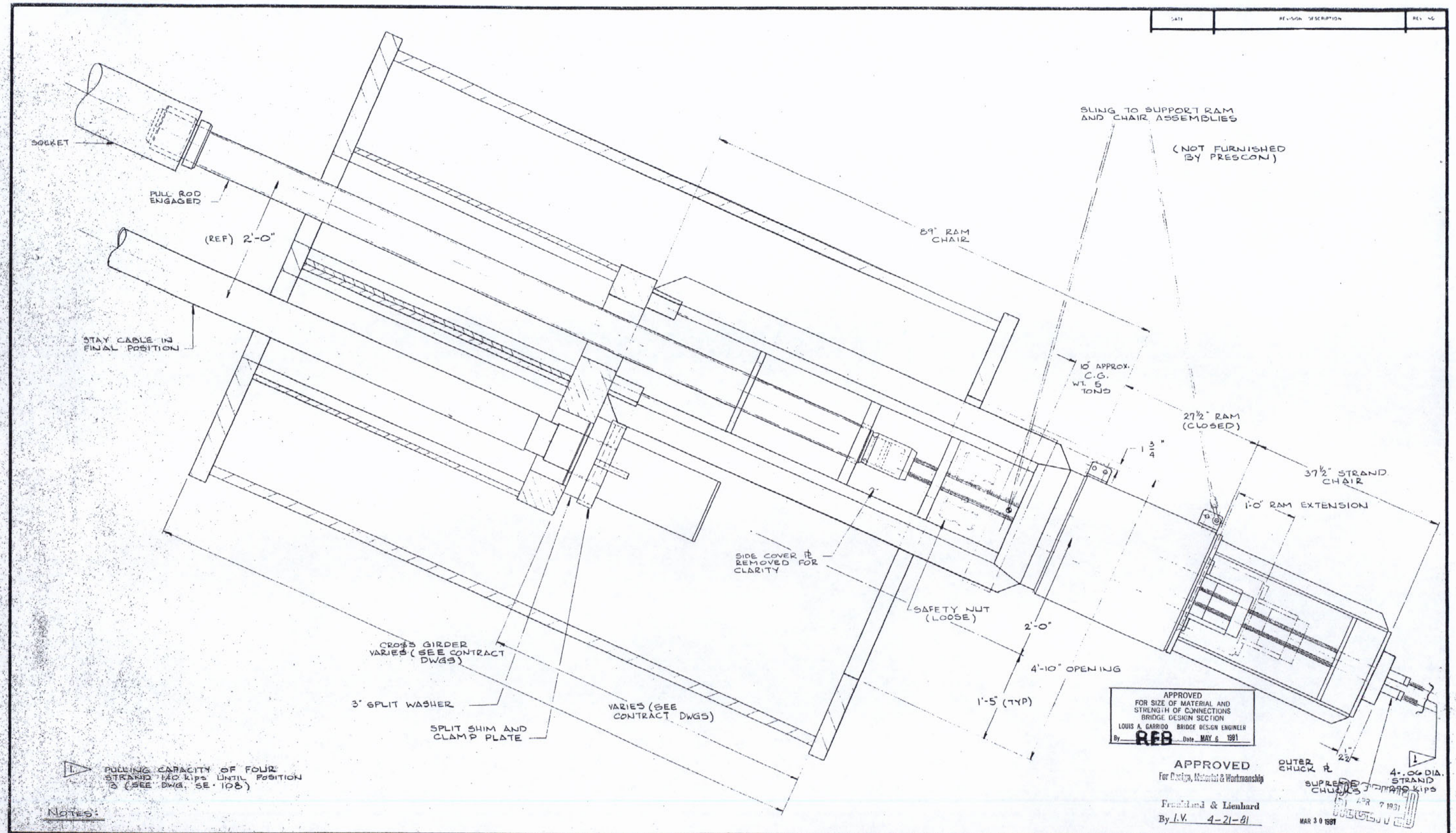

1. PULLING CAPACITY OF FOUR STRAND 140 kips UNTIL POSITION 3 (SEE DWG. SE-108)

APPROVED
FOR SIZE OF MATERIAL AND STRENGTH OF CONNECTIONS
BRIDGE DESIGN SECTION
LOUIS A. GARRIDO BRIDGE DESIGN ENGINEER
By RFB Date MAY 6 1981

APPROVED
For Design, Material & Workmanship
Frankland & Lienhard
By I.V. 4-21-81

MAR 30 1981

APR 7 1981

NOTES:

TOLERANCES UNLESS NOTED FRACTIONS ± 1/16 .XXX ± .010 DECIMALS .XX ± .030 ANGLE ± 5°	MAT'L WT. PER	FINISHED WT.	MAX'M MIN HARDNESS
	HEAT TREAT	FINISH	HEAT ASSEMBLY

Freyssinet PRESCON

THE PRESCON CORPORATION
8918 TESORO DRIVE
SAN ANTONIO, TEXAS
78217
a freyssinet international company

Disclosure Notice: This drawing is the exclusive property of The Prescon Corporation and the information shown may not be used nor the drawing reproduced without written permission of The Prescon Corporation

CONTRACTOR
WILLIAMS BROTHERS CONSTRUCTION CO., INC.
IHI INTERNATIONAL, INC

ENGINEER
FRANKLAND AND LIENHARD - MODJESKI AND MASTERS

MISSISSIPPI RIVER BRIDGE (LULING)
MAIN RIVER CROSSING SUPERSTRUCTURE
ST CHARLES PARISH

PROJECT NUMBER: 450 [illegible] FAP 1-310-4(35)223
STATE: LOUISIANA

POSITION : 2 - INITIAL TENSIONING - 1000 TON - PULLING CAPACITY : 140 kips

PRESCON
HÖHN PTL
9 JULY 1979
REIFFERT
8-31-79
SCALE: 1/8" = 1"

SE-107
REV. -0-

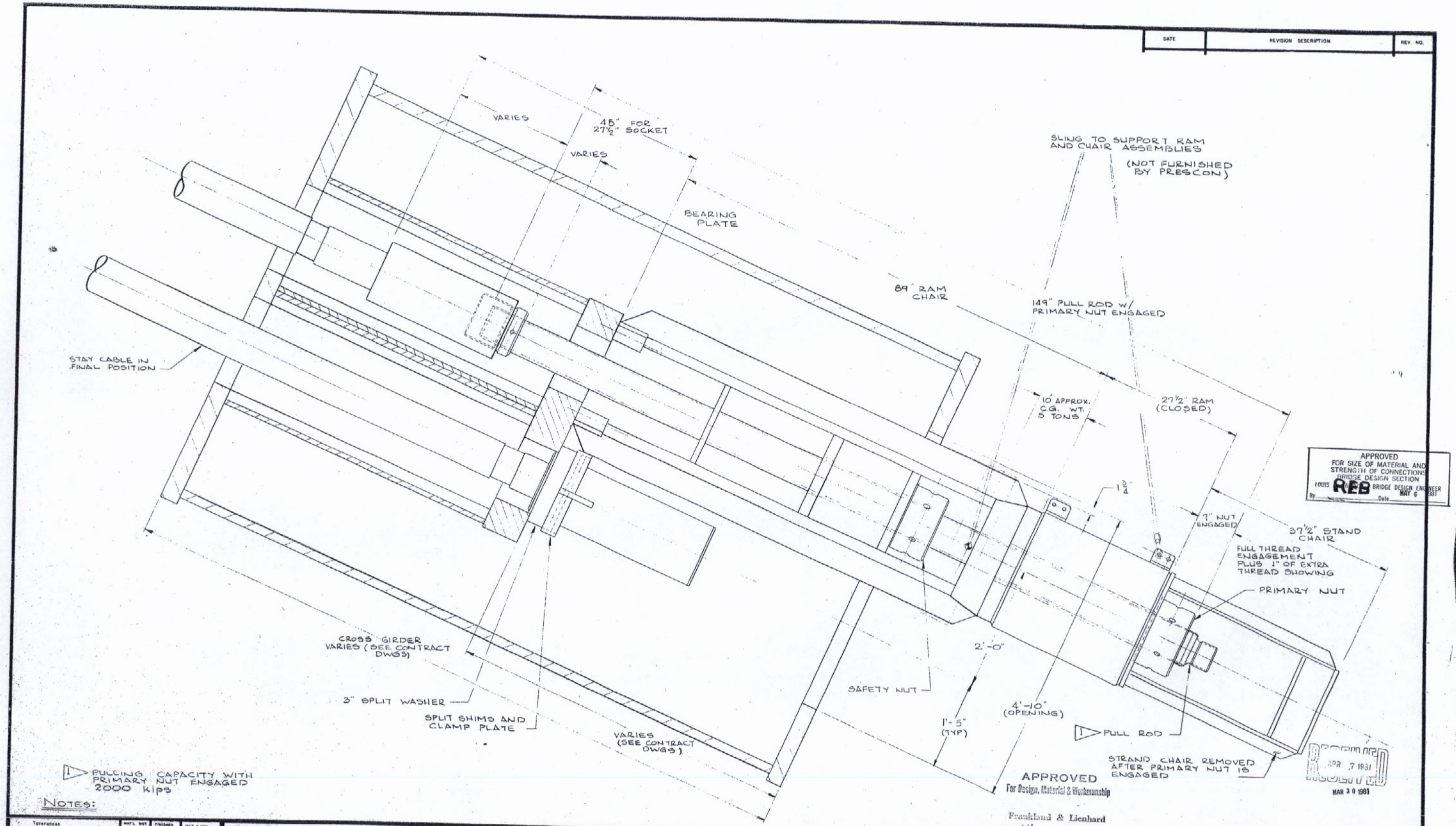

NOTES:

Tolerances UNLESS NOTED FRACTION ± 1/16 .XXX ± .010 DECIMAL .XX ± .030 ANGLE ± .5°	MAT'L WGT. OF SIZE / HEAT TREAT	FINISHED WGT. / FINISH	MAX. & MIN. HARDNESS / HEAT ASSEMBLY	Freyssinet PRESCON — THE PRESCON CORPORATION 8918 TESORO DRIVE SAN ANTONIO, TEXAS 78217 a freyssinet international company	Disclosure Notice This drawing is the exclusive property of The Prescon Corporation and the information shown may not be used nor the drawing reproduced without written permission of The Prescon Corporation	CONTRACTOR WILLIAMS BROTHERS CONSTRUCTION CO., INC. IHI INTERNATIONAL, INC. ENGINEER FRANKLAND AND LIENHARD – MODJESKI AND MASTERS	PROJECT MISSISSIPPI RIVER BRIDGE (LULING) MAIN RIVER CROSSING SUPERSTRUCTURE ST. CHARLES PARISH PROJECT NUMBER / STATE

POSITION : 3 - PULL ROD ENGAGED IN PRIMARY NUT

JOB NO.	PBX 8001
DRAWN BY	HÖHN PTL.
DATE	10 JULY 1979
CHECKED BY	REIFFERT
DWG. NUMBER	SE-108

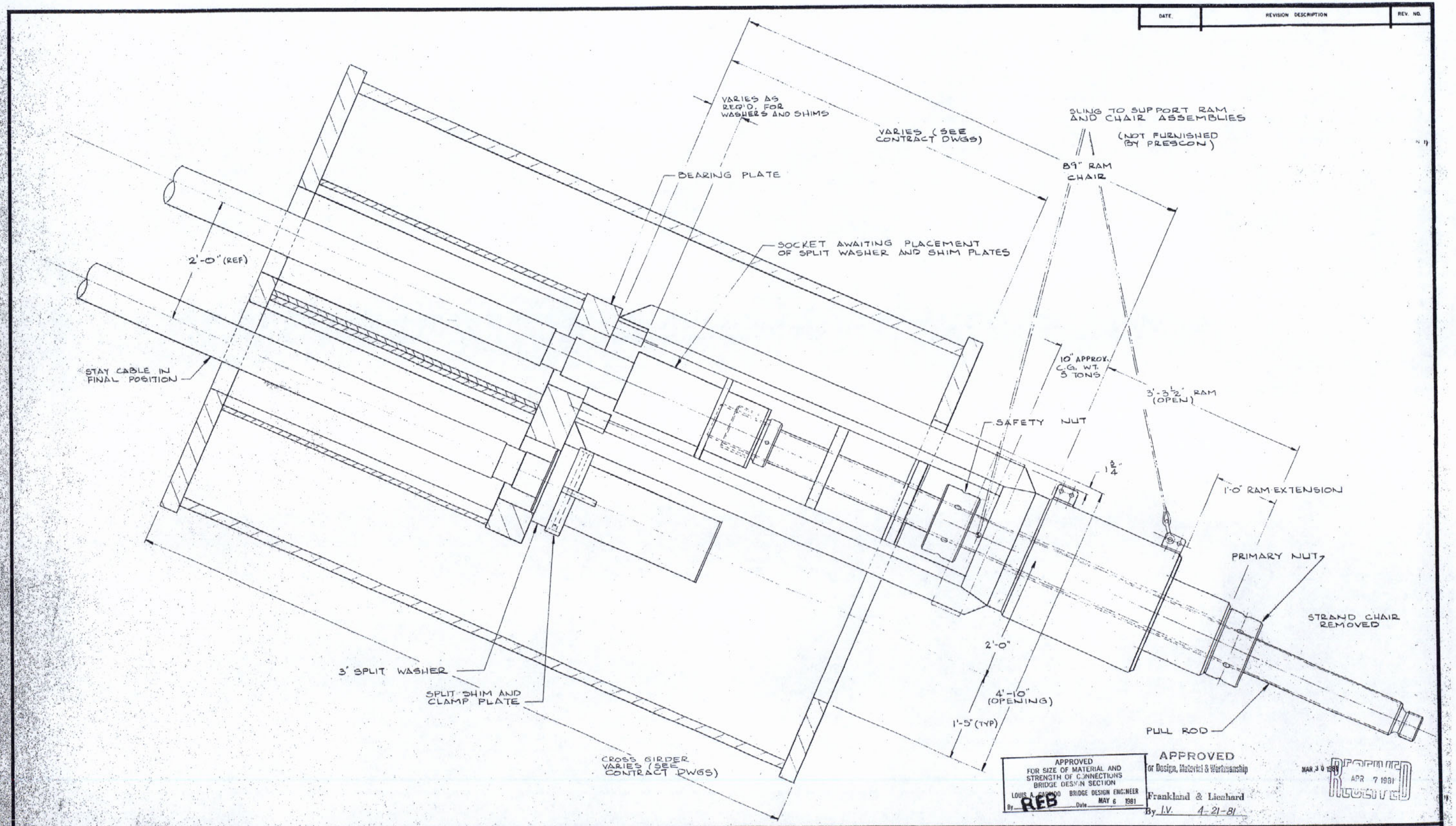

Tolerances UNLESS NOTED: FRACTION ± 1/16, DECIMAL .XX ± .010, .XXX ± .030, ANGLE ± 5°

MATL. WT. SIZE | FINISHED WT. | MAX & MIN HARDNESS | HEAT TREAT | FINISH | NEXT ASSEMBLY

Freyssinet PRESCON

THE PRESCON CORPORATION
8918 TESORO DRIVE
SAN ANTONIO, TEXAS
78217
a freyssinet international company

Disclosure Notice: This drawing is the exclusive property of The Prescon Corporation and the information shown may not be used nor the drawing reproduced without written permission of The Prescon Corporation.

CONTRACTOR: WILLIAMS BROTHERS CONSTRUCTION CO., INC.
IHI INTERNATIONAL, INC.

ENGINEER: FRANKLAND AND LIENHARD – MODJESKI AND MASTERS

PROJECT: MISSISSIPPI RIVER BRIDGE (LULING)
MAIN RIVER CROSSING SUPERSTRUCTURE
ST. CHARLES PARISH

PROJECT NUMBER	STATE
450-37-02 FAP I-310-4(35)223	LOUISIANA

POSITION: 4 - SOCKET IN FINAL POSITION - 1000 TON -

PBX 8001
DRAWN BY: HÄHN
DATE: 10 JULY 1979
CHECKED BY: REIFFERT
DATE: 8-31-79
SCALE: 1/8" = 1"

SE-109
REV. -0-

DATE	REVISION DESCRIPTION	REV. NO.
2-7-80	AS NOTED	1
8-13-80	AS NOTED	2
10-31-80	AS NOTED - PER STATE COMMENTS	3
3-31-81	AS NOTED	4
5-5-81	AS NOTED	5

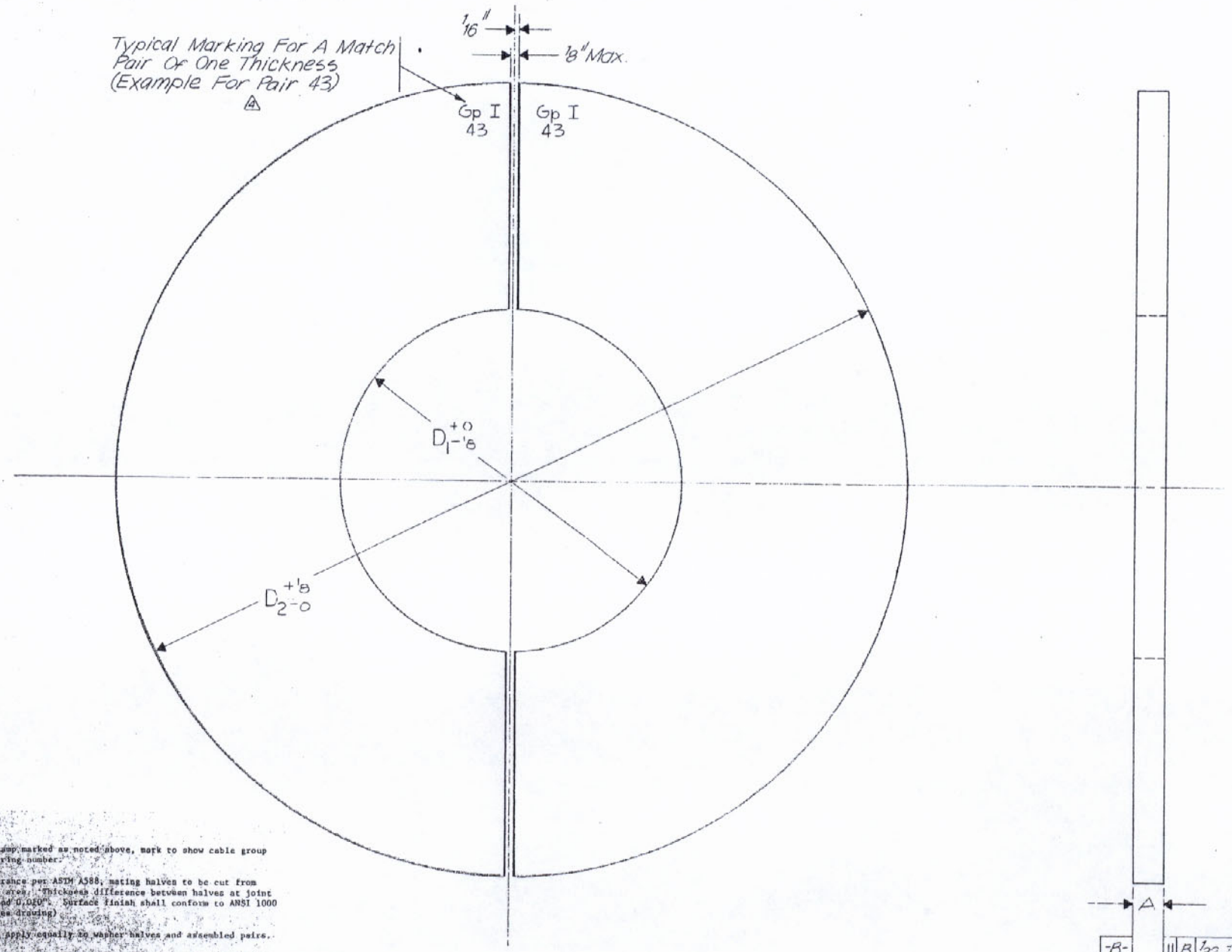

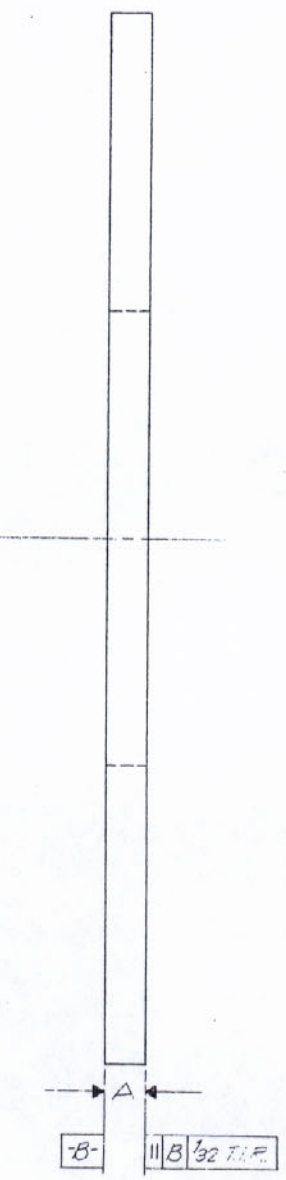

NOTE: SHIMS WILL BE FURNISHED IN THICKNESSES OF 3", 1½", 1", ½", ¼"

CROSS GIRDER	GROUP	D1	D2
1, 12	I	7.25"	16"
2, 3, 5, 8, 10, 11	II	7.25"	15"
4, 9	IV	5.25"	12"
6, 7	V	8.0"	17½"

NOTES:

1. Shims to be stamp marked as noted above, mark to show cable group number and pairing number.
2. Thickness tolerance per ASTM A588, mating halves to be cut from adjacent plate area. Thickness difference between halves at joint shall not exceed 0.020". Surface finish shall conform to ANSI 1000 or better. (See drawing)
3. All tolerances apply equally to washer halves and assembled pairs.
4. Shop coat paint, the procedure for the shop coat paint should be as follows:
   a. All weld spatter and other undesirable materials shall be removed and sharp edges ground smooth for metal surfaces prior to blast cleaning. (Round edges to between 1/16" R and 1/8" R.)
   b. Degrease with solvent.
   c. Sandblast per section 811.06 of Standard Specifications.
   d. Spray paint same day with one full coat of "Inorganic Zinc Primer", dry thickness to be 3/4 to 2.0 mm. Primer shall conform to subsection 1008.03 Louisiana Standard Specifications, as manufactured by Mobil Chemical Co. or Exxon Chemical Co.
5. When placing shims, the joint between one pair of shims shall be rotated through 90° ±15° from the joint of previously placed pair of shims or washers. So that in no case shall the joints of any adjacent pairs of shims be in line.

APPROVED
For Design, Material & Workmanship
Frankland & Lienhard
By I.V. 6-8-81

APPROVED
FOR SIZE OF MATERIAL AND STRENGTH OF CONNECTIONS
BRIDGE DESIGN SECTION
LOUIS A. GARRIDO BRIDGE DESIGN ENGINEER
By REB Date JUN 1 5 1981

RECEIVED
MAY 20 1981
MAY 19 1981

Contractor: WILLIAMS BROTHERS CONSTRUCTION CO., INC. INL INTERNATIONAL, INC.

Engineer: FRANKLAND AND LIENHARD - MODJESKI AND MASTERS

Project: MISSISSIPPI RIVER BRIDGE (LULING) MAIN RIVER CROSSING SUPERSTRUCTURE ST. CHARLES PARISH

PROJECT NUMBER	STATE
450-37-02 FAP. I-310-4(35)223	LOUISIANA

NOTICE: THIS DRAWING IS THE EXCLUSIVE PROPERTY OF THE PRESCON CORP AND THE INFORMATION SHOWN MAY NOT BE USED NOR THE DRAWING REPRODUCED WITHOUT WRITTEN PERMISSION OF THE PRESCON CORP

Freyssinet PRESCON

THE PRESCON CORPORATION
8918 TESORO DRIVE
SAN ANTONIO, TEXAS
78217
a freyssinet international company

Tolerances UNLESS NOTED: FRACTION ± 1/16"; DECIMAL ± .030; ANGLE ± 0.5°

MAT'L WGT OF SIZE | FINISHED WGT. | MAX. & MIN HARDNESS | HEAT TREAT | FINISH 1000 | NEXT ASSEMBLY

MATERIAL SPECIFICATIONS: A-588

DRAWN BY: M. RESENDEZ | APPROVED BY: M.H. Hoeler | SCALE | APPROVAL DATE

PART NAME: BOTTOM SPLIT SHIMS

DRAWING NUMBER: BSS-100

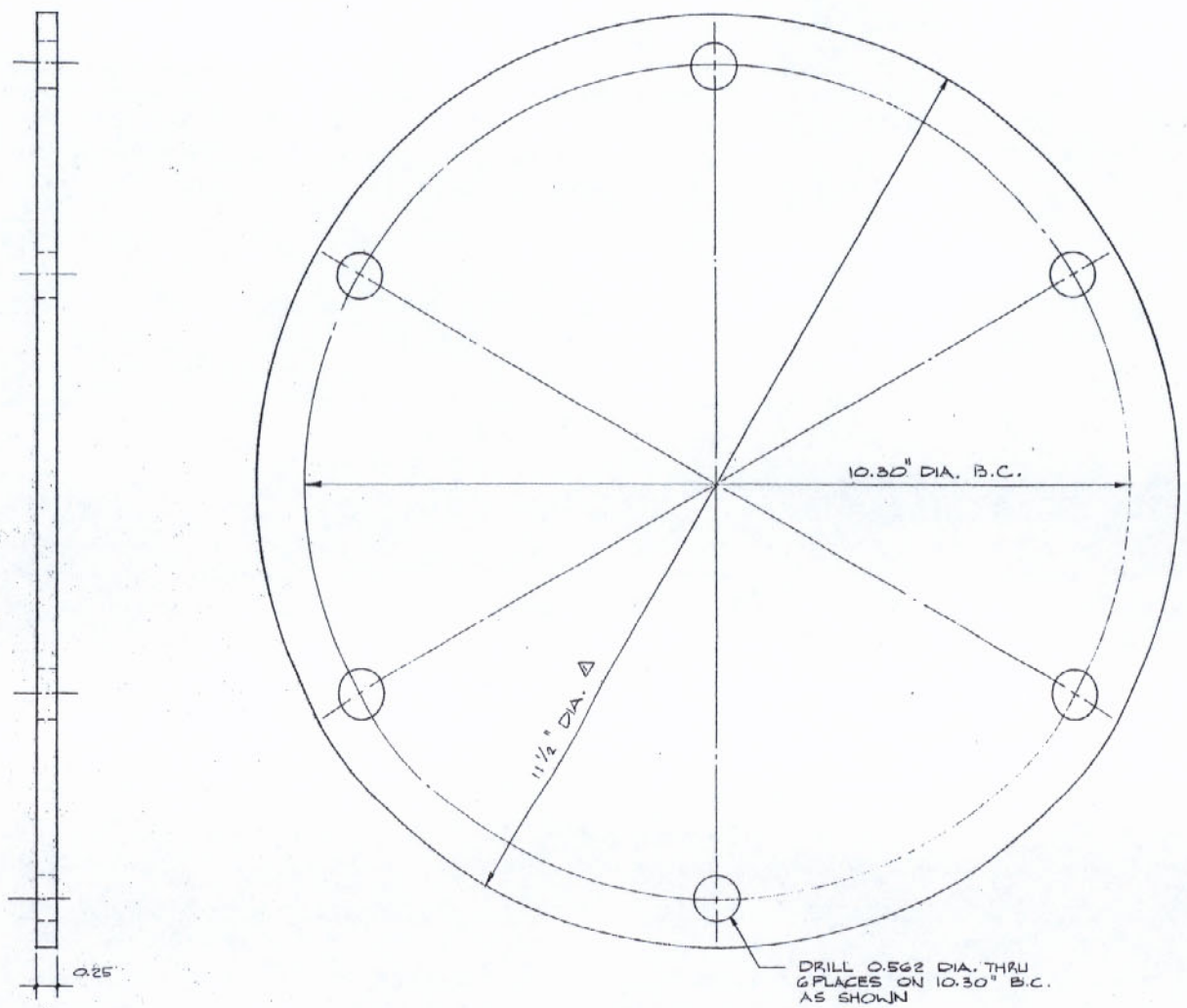

CAP PLATE SOCKET I

SCALE: _____ FULL

NOTES.

1. SHOP COAT PAINT
   A. REMOVE OILY RESIDUES W/SOLVENT
   B. SANDBLAST PER SECTION 811.06 OF STD. SPECIFICATIONS
   C. SPRAY PAINT SAME DAY W/ONE FULL COAT OF "INORGANIC ZINC SILICATE PAINT MIN. DRY THICKNESS 2.5 MILS.
2. TOLERANCES ± 1/16" UNLESS NOTED
3. HOLES TO BE DRILLED USING DRILL FIXTURE
4. FLAME CUT BASIC SHAPE ACCEPTABLE - PARTS MUST BE FLAT WITHIN 1/16" OVER DIAMETER.
5. PLATE THICKNESS TO MILL TOLERANCES PER ASTM A-6
6. REMOVE ROUGH EDGE WITH GRINDER IF PLATES ARE FLAME CUT IN LIEU OF CHAMFER.

APPROVED
For Design, Material & Workmanship

Frankland & Lienhard
By I.V. 6-8-81

APPROVED
FOR SIZE OF MATERIAL AND STRENGTH OF CONNECTIONS
BRIDGE DESIGN SECTION
LOUIS A. GARRIDO BRIDGE DESIGN ENGINEER
By REB Date JUN 15 1981

RECEIVED
MAY 20 1981

MAY 19 1981

Tolerances, unless noted: fraction ± 1/16" decimal .XX 0.030"	1	1	STEEL PLATE	11.50" DIA. x .25 THK	A-36	CAP PLATE	
	Item No	Qty Req'd	Material	Material Size	Spec	Description	Drawing No.

THE PRESCON CORPORATION
2426 CEE SEE
SAN ANTONIO TEXAS 78217

Disclosure Notice
This drawing is the exclusive property of The Prescon Corporation and the information shown may not be used for the [illegible]

CONTRACTOR
WILLIAMS BROTHERS CONSTRUCTION CO., INC.
IHI INTERNATIONAL, INC.

ENGINEER
FRANKLAND AND LIENHARD - MOODEFEE AND MASTERS

PROJECT
MISSISSIPPI RIVER BRIDGE (LULING)
MAIN RIVER CROSSING SUPERSTRUCTURE
ST. CHARLES PARISH

CAP PLATE DETAIL FOR SOCKETS I

JOB NO. PBX 8001
DRAWN BY M. TELLEZ
DATE 5-18-81

DWG. NUMBER
CP-1

DATE	REVISION DESCRIPTION	REV. NO.
3-30-81	FOR APPROVAL	0
5-19-81	AS NOTED	1

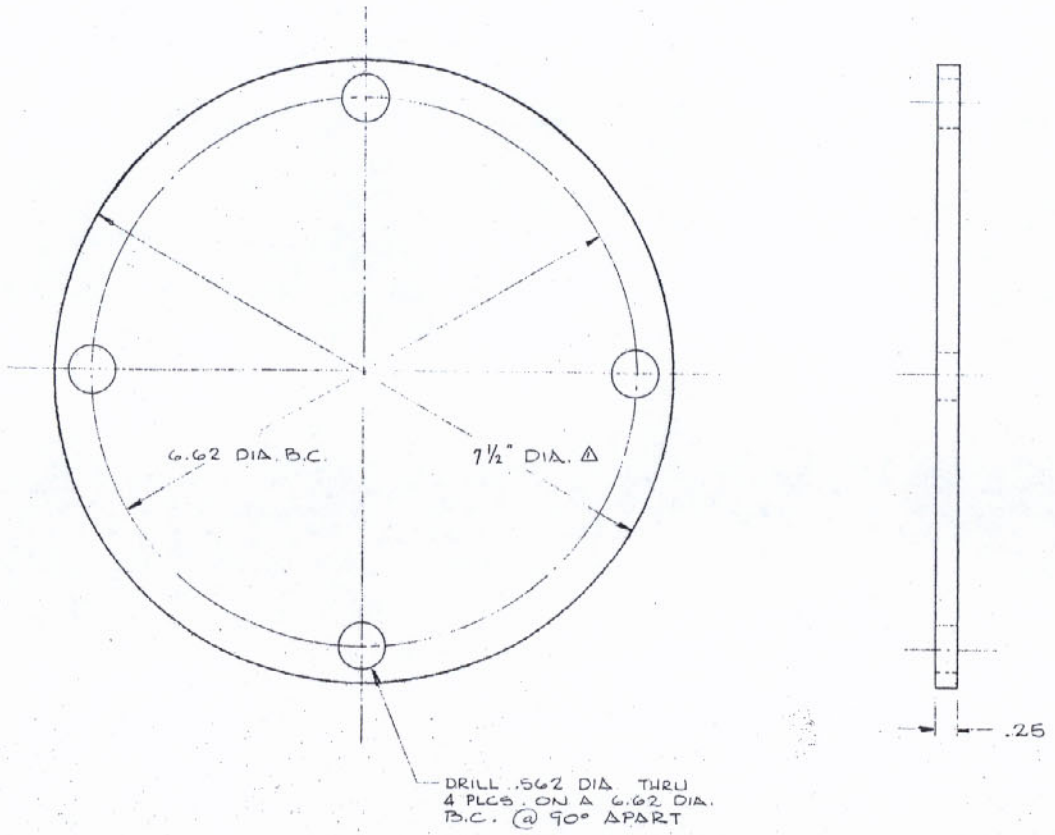

APPROVED
For Design, Material & Workmanship

Frankland & Lienhard
By I.V. 6-8-81

RECEIVED
MAY 20 1981

APPROVED
FOR SIZE OF MATERIAL AND
STRENGTH OF CONNECTIONS
AND DESIGN SECTION
LOUIS A. GARRIDO BRIDGE DESIGN ENGINEER
By BER Date JUN 15 1981

MAY 18 1981

5. REMOVE ROUGH EDGE WITH GRINDER IF PLATES ARE FLAME CUT IN LIEU OF CHAMFER.
4. PLATE THICKNESS TO MILL TOLERANCES PER ASTM A-6.
3. FLAME CUT BASIC SHAPE ACCEPTABLE - PARTS MUST BE FLAT WITHIN 1/16" OVER DIAMETER.
2. HOLES TO BE DRILLED USING DRILL FIXTURE.
1. SHOP COAT PAINT:
   A. REMOVE OILY RESIDUES W/SOLVENTS.
   B. SANDBLAST PER SECTION 811.06 OF STD SPECIFICATIONS.
   C. SPRAY PAINT SAME DAY W/ONE FULL COAT OF INORGANIC ZINC SILICATE PAINT, MIN. DRY THICKNESS 2.5 MILS.

NOTES:

ITEM NO	QTY REQ'D	MATERIAL	MATERIAL SIZE	SPEC	DESCRIPTION	DRAWING NO
1	1	STEEL PLATE	7.50 DIA. X .25 THK.	A-36	CAP PLATE	

TOLERANCES UNLESS NOTED: FRACTIONS ± 1/16, .XXX ± .010, .XX ± .030, ANGLE ± .5°

WELD, NOT OF SIZE | FINISHED NOT APPROX. | MAX & MIN HARDNESS | HEAT TREAT | FINISH | HEAT ASSEMBLY

Freyssinet PRESCON

THE PRESCON CORPORATION
8918 TESORO DRIVE
SAN ANTONIO, TEXAS
78217

CONTRACTOR: WILLIAMS BROTHERS CONSTRUCTION CO., INC.
IHI INTERNATIONAL, INC

ENGINEER: FRANK AND ANN LIENHARD - MOCJESKI AND MASTERS

PROJECT: MISSISSIPPI RIVER BRIDGE (LULING)
MAIN RIVER CROSSING SUPERSTRUCTURE
ST. CHARLES PARISH

DRAWING NUMBER | DATE

CAP PLATE - LIVE END/
DEAD END
(SOCKET IV)

PRX 6501
HOUN 26 JULY 79
TAC 8/13/79

CP-2

DATE	REVISION DESCRIPTION	REV NO.
3-30-81	FOR APPROVAL	0
5-19-81	AS NOTED	1

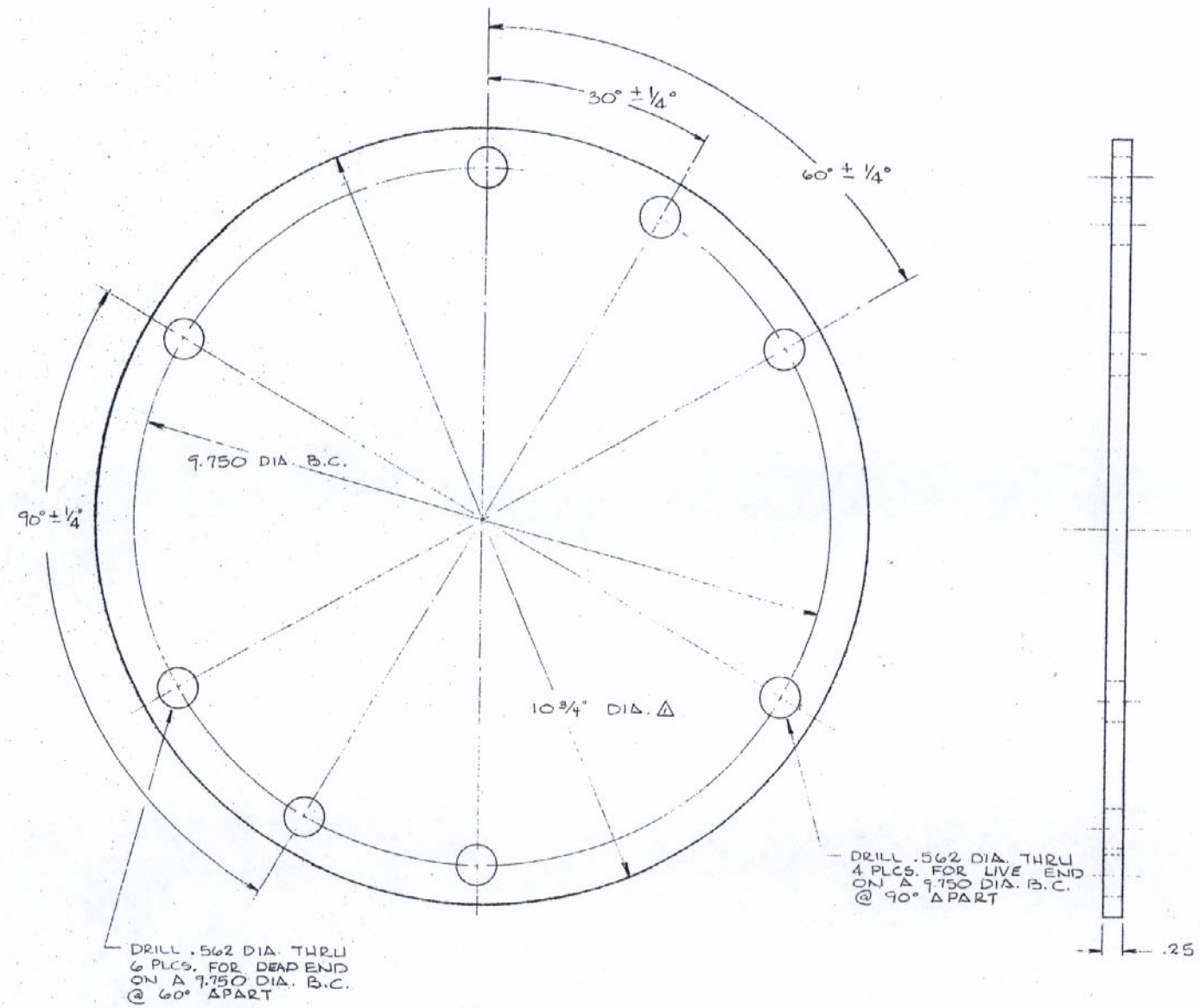

5. REMOVE ROUGH EDGES WITH GRINDER IF PLATES ARE FLAME CUT IN LIEU OF CHAMFER.
4. PLATE THICKNESS TO MILL TOLERANCES PER ASTM A-6.
3. FLAME CUT BASIC SHAPE ACCEPTABLE - PARTS MUST BE FLAT WITHIN 1/16" OVER DIAMETER.
2. HOLES TO BE DRILLED USING DRILL FIXTURE.
1. SHOP COAT PAINT:
   A. REMOVE OILY RESIDUES W/SOLVENT.
   B. SANDBLAST PER SECTION 811.06 OF STD. SPECIFICATIONS.
   C. SPRAY PAINT SAME DAY W/ONE FULL COAT OF "INORGANIC ZINC SILICATE PAINT", MIN. DRY THICKNESS 2.5 MILS.

NOTES:

APPROVED
For Design, Material & Workmanship
Frankland & Lienhard
By I.V. 6-8-81

APPROVED
FOR SIZE OF MATERIAL AND STRENGTH OF CONNECTIONS
BRIDGE DESIGN SECTION
LOUIS A. GARRIDO BRIDGE DESIGN ENGINEER
By REB Date JUN 15 1981

RECEIVED
MAY 20 1981
MAY 19 1981

1	1	STEEL PLATE	10.75 DIA. X .25 THK.	A-36	CAP PLATE	

UNLESS NOTED:
.xxx ± 1/16
.xxx ± .010
.xx ± .030
.5°

APPROX. 6.3#
25/

Freyssinet
PRESCON

THE PRESCON CORPORATION
8918 TESORO DRIVE
SAN ANTONIO, TEXAS
78217

CAP PLATE - LIVE END/ DEAD END

26 JULY 79
TAC

CP-3

DATE	REVISION DESCRIPTION	REV. NO.
3-30-81	FOR APPROVAL	0
5-19-81	AS NOTED	1

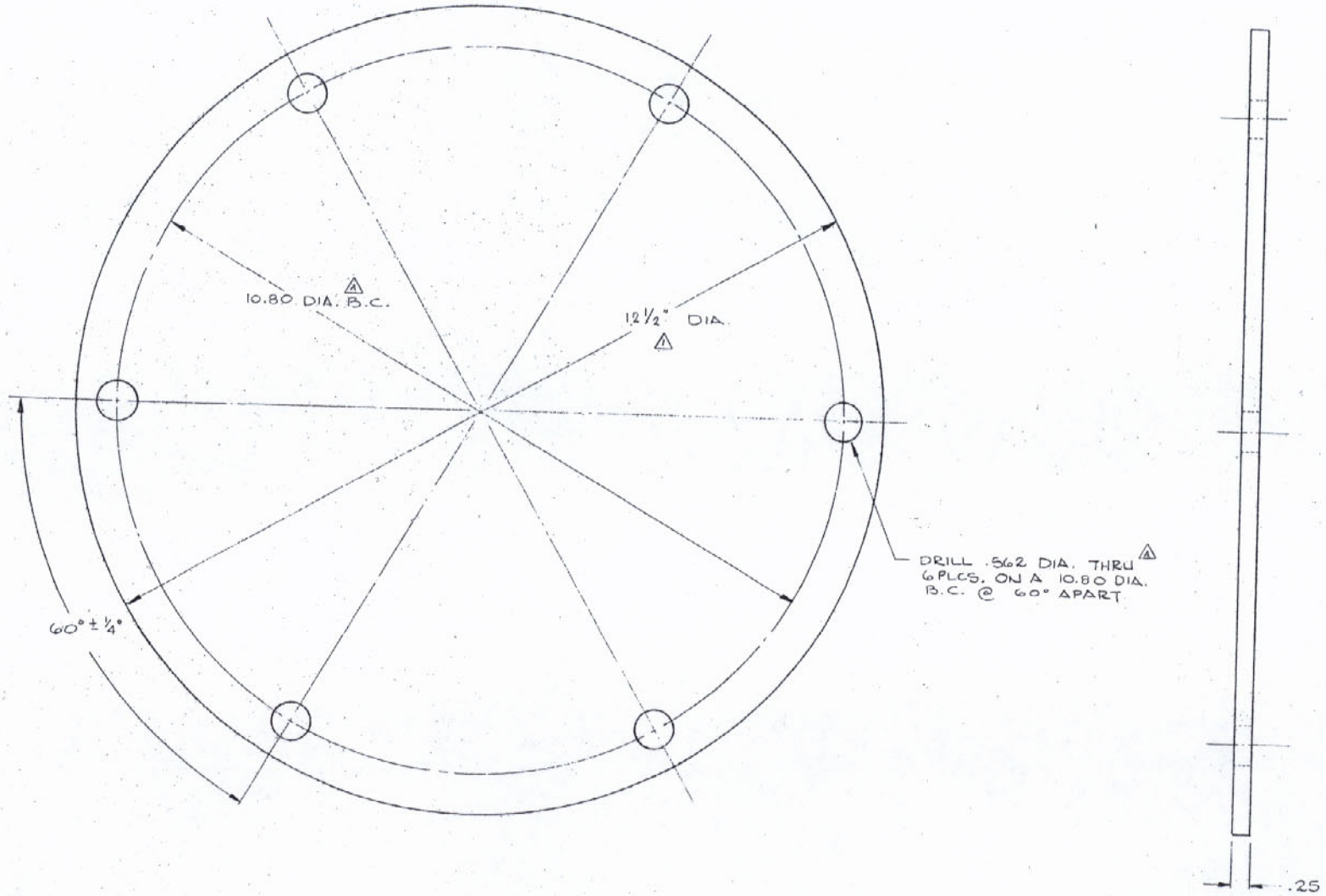

5. REMOVE ROUGH EDGE WITH GRINDER IF PLATES ARE FLAME CUT IN LIEU OF CHAMFER.
4. PLATE THICKNESS TO MILL TOLERANCE PER ASTM A-6.
3. FLAME CUT BASIC SHAPE ACCEPTABLE - PARTS MUST BE FLAT WITHIN 1/16" OVER DIAMETER.
2. HOLES TO BE DRILLED USING DRILL FIXTURE.
1. SHOP COAT PAINT:
   A. REMOVE OILY RESIDUES W/ SOLVENTS.
   B. SANDBLAST PER SECTION 811.06 OF STD. SPECIFICATIONS.
   C. SPRAY PAINT SAME DAY W/ONE FULL COAT OF "INORGANIC ZINC SILICATE PAINT", MIN. DRY THICKNESS 2.5 MILS.

NOTES:

APPROVED
For Design, Material & Workmanship
Frankland & Lienhard
By I.V. 6-8-81

APPROVED
FOR SIZE OF MATERIAL AND STRENGTH OF CONNECTIONS
BRIDGE DESIGN SECTION
LOUIS A. GARRIDO BRIDGE DESIGN ENGINEER
By REB Date JUN 15 1981

RECEIVED
MAY 20 1981
MAY 19 1981

ITEM NO	QTY REQ'D	MATERIAL	MATERIAL SIZE	SPEC	DESCRIPTION	DRAWING NO
1	1	STEEL PLATE	1250 DIA. X .25 THK	A-36	CAP PLATE	

UNLESS NOTED: FRACTION ± 1/16, .XXX ± .010, .XX ± .030

THE PRESCON CORPORATION
8918 TESORO DRIVE
SAN ANTONIO, TEXAS
78217

Freyssinet PRESCON

WILLIAMS BROTHERS CONSTRUCTION CO., INC
IHI INTERNATIONAL, INC
FRANKLAND AND LIENHARD - MOOJESKI AND MASTERS

MISSISSIPPI RIVER BRIDGE (LOCING)
MAIN RIVER CROSSING SUPERSTRUCTURE

CAP PLATE - LIVE END / DEAD END

27 JULY 79

CP-4

DATE	REVISION DESCRIPTION	REV. NO.
3-19-81	MATERIAL SPECIFICATION	1
3-30-81	AS NOTED	2
5-5-81	AS NOTED	3
5-19-81	AS NOTED	4

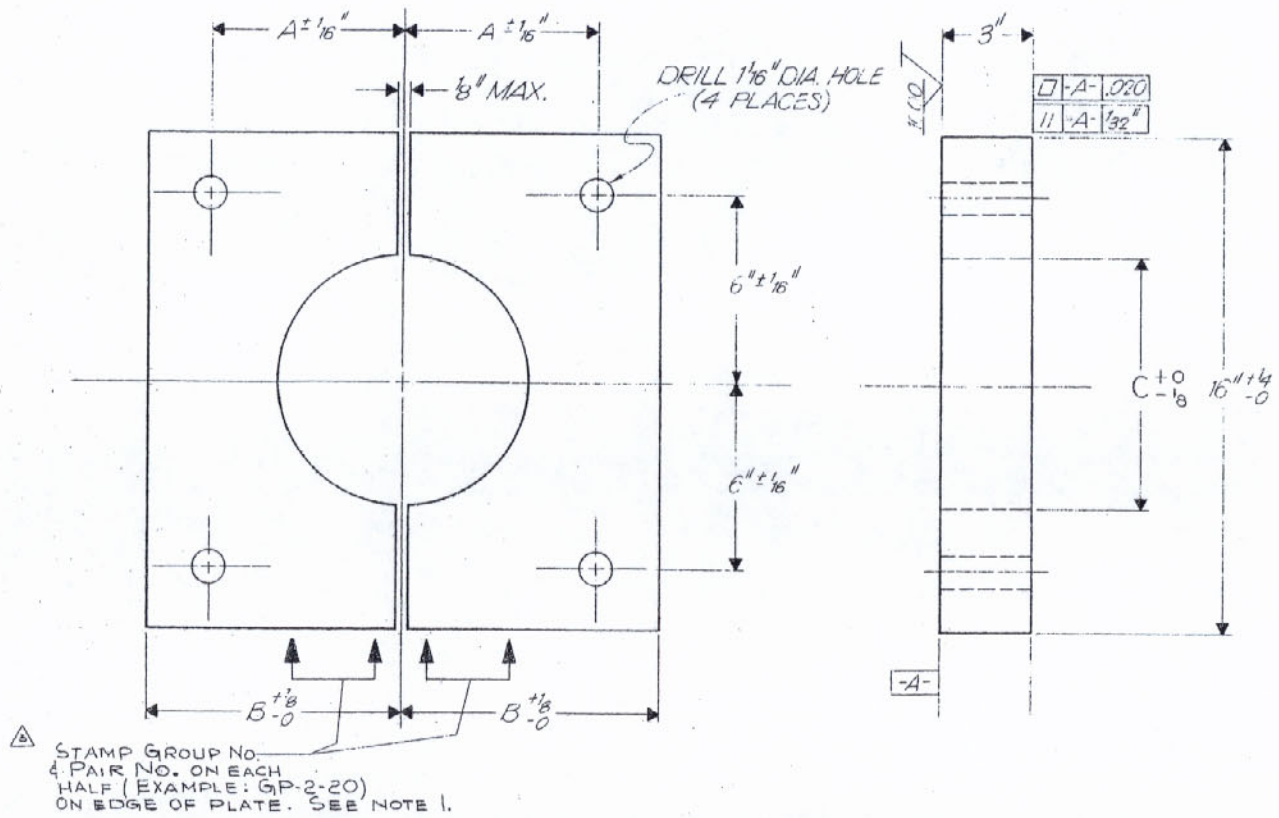

TOP SPLIT WASHER

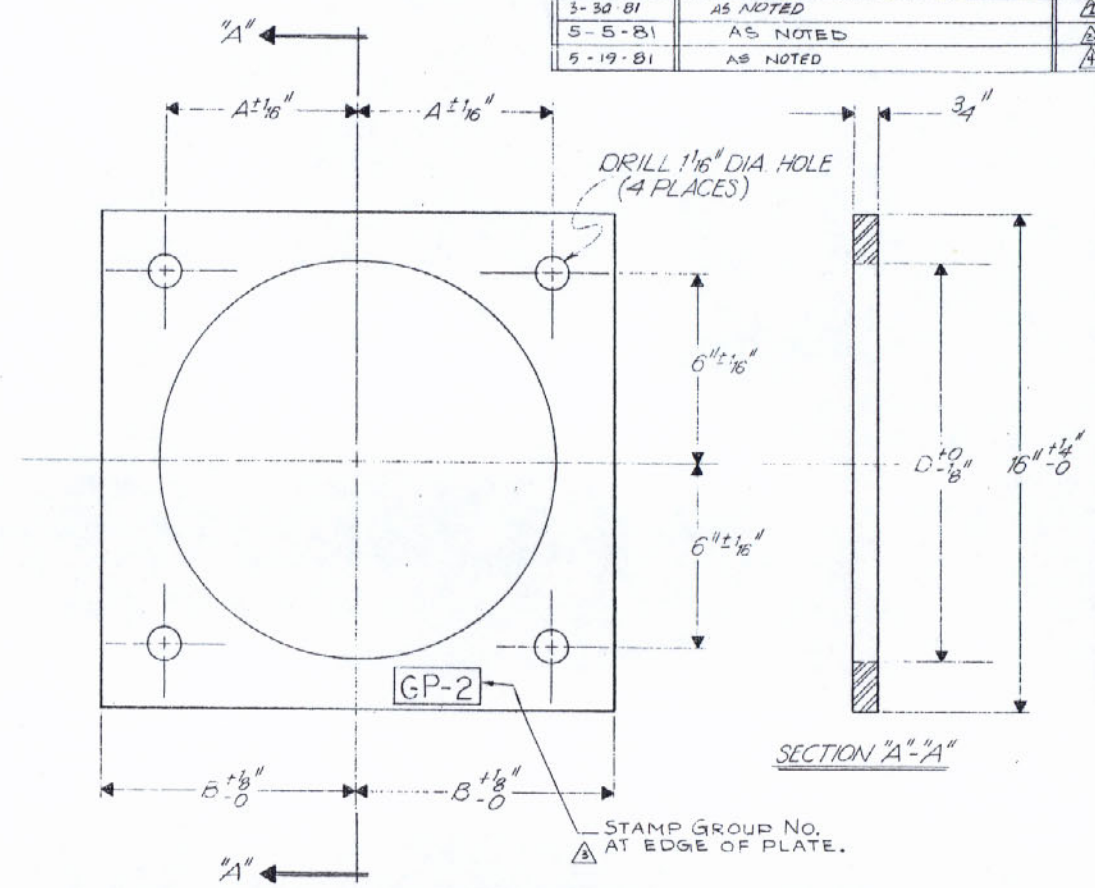

TOP KEEPER PLATE

MARK	PC NO.	GROUP	DIMENSIONS A	B	C	D			NO. REQ.
			TOP SPLIT WASHER						
		I	5 3/4"	7 3/4"	7 1/4"	—			16
		II	5 3/8"	7 3/8"	7 1/4"	—			32
		IV	3 3/4"	5 3/4"	5 1/4"	—			16
		V	6 1/4"	8 1/4"	8"	—			8
			TOP KEEPER PLATE						
		I	5 3/4"	7 3/4"	—	11 3/4"			16
		II	5 3/8"	7 3/8"	—	11"			32
		IV	3 3/4"	5 3/4"	—	7 3/4"			16
		V	6 1/4"	8 1/4"	—	12 3/4"			8

4

3 NOTES:

1. Washers and keeper plates to be stamp-marked as noted above, mark to show cable group number and for washers only, the pairing number.
2. Thickness tolerance per ASTM A588, mating halves to be cut from adjacent plate area. Thickness difference between halves at joint shall not exceed 0.010". Surface finish shall conform to ANSI 1000 or better. (See drawing)
3. All tolerances apply equally to washer halves and assembled pairs.
4. Shop coat paint, the procedure for the shop coat paint should be as follows:
   a. All weld spatter and other undesirable materials shall be removed and sharp edges ground smooth for metal surfaces prior to blast cleaning. (Round edges to between 1/16" R and 1/8" R.)
   b. Degrease with solvent.
   c. Sandblast per section 811.06 of Brandard Specification.
   d. Spray paint same day with one full coat of "Inorganic Zinc Primer", dry thickness to be 2/4 to 2.0 mm. Primer shall conform to subsection 1006.03 Louisiana Standard Specifications, as manufactured by Mobil Chemical Co. or Lexco Chemical Company.

APPROVED
For Design, Material & Workmanship

Frankland & Lienhard
By I.V. 6-8-81

APPROVED FOR SIZE OF MATERIAL AND STRENGTH OF CONNECTIONS ONLY. THIS APPROVAL DOES NOT CONSTITUTE A DESIGN CHANGE
By R.E.B. Date JUN 1 5 1981

RECEIVED MAY 20 1981

MAY 1 9 1981

Contractor: WILLIAMS BROTHERS CONSTRUCTION CO., INC. THI INTERNATIONAL, INC.	Project: MISSISSIPPI RIVER BRIDGE (LA 641) MAIN RIVER CROSSING SUPERSTRUCTURE ST. CHARLES PARISH	NOTICE: THIS DRAWING IS THE EXCLUSIVE PROPERTY OF THE PRESCON CORP. AND THE INFORMATION SHOWN MAY NOT BE USED NOR THE DRAWING REPRODUCED WITHOUT WRITTEN PERMISSION OF THE PRESCON CORP.	Freyssinet PRESCON	THE PRESCON CORPORATION 8918 TESORO DRIVE SAN ANTONIO, TEXAS 78217	Tolerances UNLESS OTHERWISE SPECIFIED ± .25 DECIMALS ± .010 FRACTIONS ± 1/16 ANGLES ± 1°
Engineer: FRANKLAND AND LIENHARD - MODJESKI AND MASTERS	PROJECT NUMBER: 450-37-02 FAP. I-510-4(35)223 STATE: LOUISIANA			© Freyssinet international company	WGT. WGT. EACH / FINISHED WGT. / MAX. BIN HARDNESS / WELD TREAT / FINISH / HEAT ASSEMBLY

MATERIAL SPECIFICATIONS: ASTM A-588	PART NAME: TOP SPLIT WASHER / TOP KEEPER PLATE	
DRAWN BY: L. GONZALEZ	APPROVED BY: M. [illegible]	
SCALE: N/S	APPROVAL DATE	DRAWING NUMBER: TSW-1 REV. 4

DATE	REVISION DESCRIPTION	REV. NO.
2-7-80	AS NOTED	1
8-8-80	ADDED STEP ON WASHER / MATERIAL	2
10-31-80	AS NOTED - PER STATE COMMENTS	3
3-31-81	AS NOTED	4
5-5-81	AS NOTED	5
5-19-81	AS NOTED	6

CROSS GIRDER	GROUP	A	B Ø	C Ø	D Ø
1, 12	I	3"	7.25"	16"	11.0"
2, 3, 5, 8, 10, 11	II	3"	7.25"	15"	10.25"
4, 9	IV	3"	5.25"	12"	7.0"
6, 7	V	3"	8.0"	17½"	12.0"

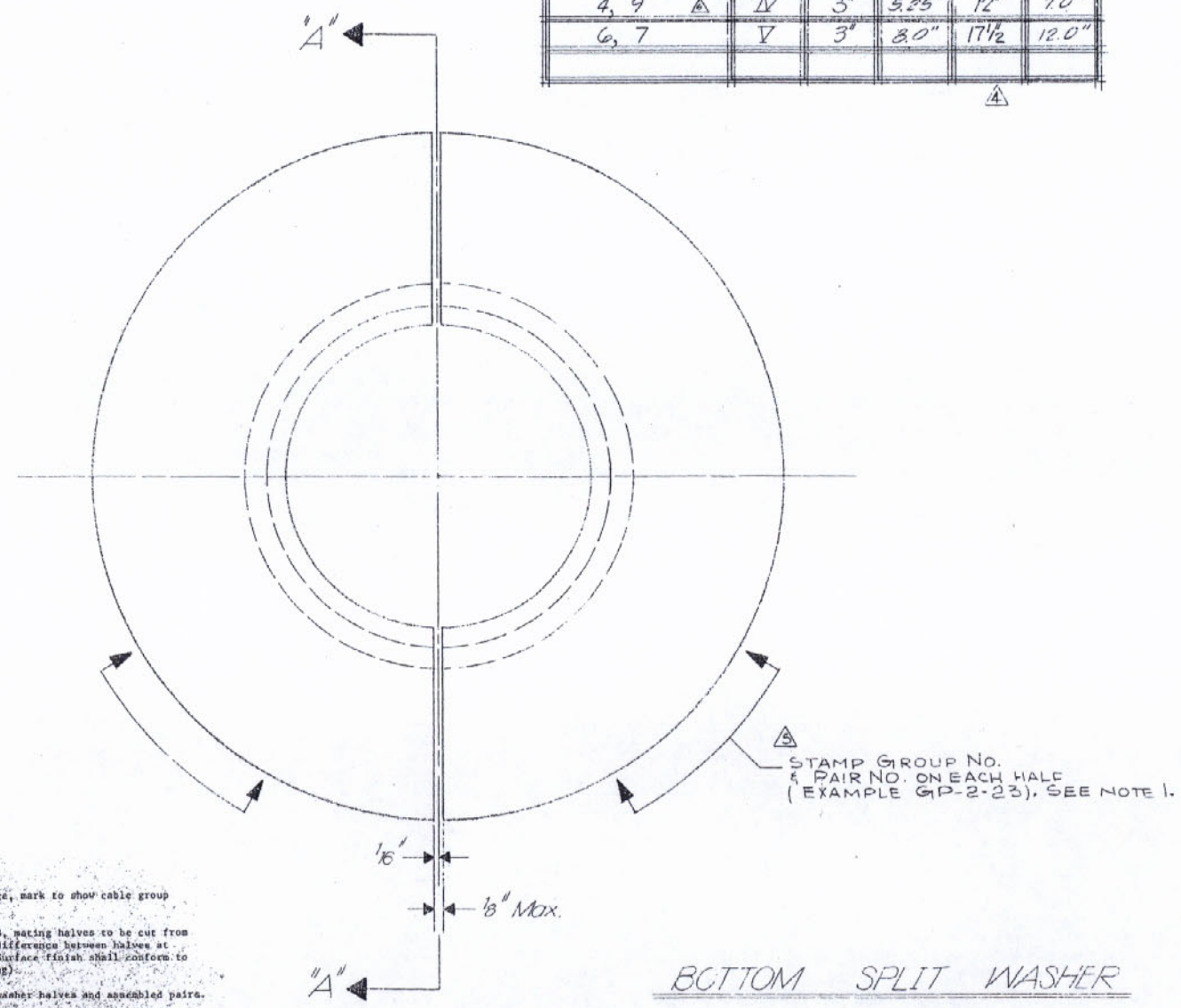

BOTTOM SPLIT WASHER

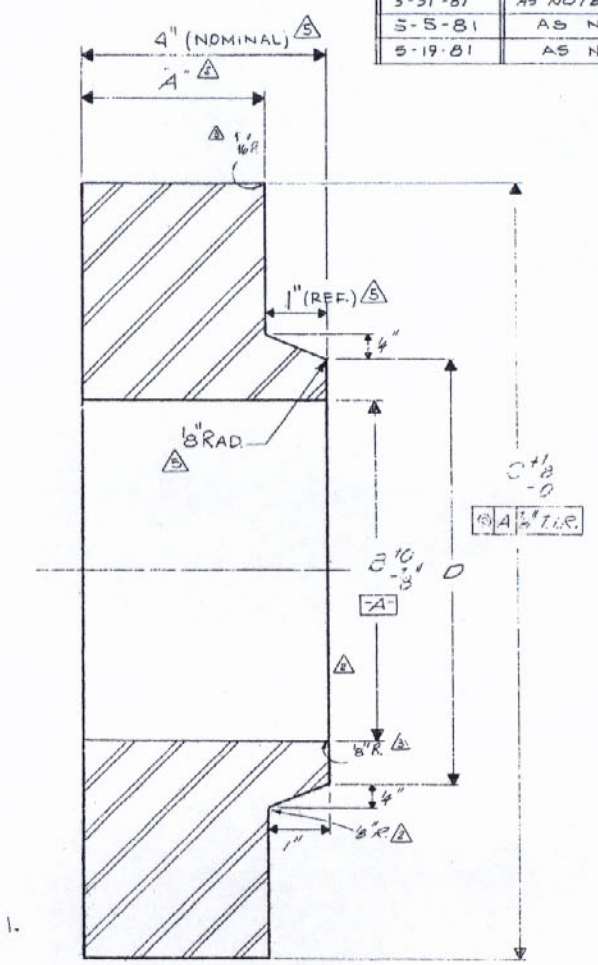

SECTION "A"-"A"

NOTES:

1. Washers to be stamp marked on edge, mark to show cable group number and pairing number.
2. Thickness tolerance per ASTM A588, mating halves to be cut from adjacent plate area. Thickness difference between halves at joint shall not exceed 0.010". Surface finish shall conform to ANSI 1000 or better. (See drawing).
3. All tolerances apply equally to washer halves and assembled pairs.
4. Shop coat paint, the procedure for the shop coat paint should be as follows:
   a. All weld spatter and other undesirable materials shall be removed and sharp edges ground smooth for metal surfaces prior to blast cleaning. (Round edges to between 1/16" R and 1/8" R.)
   b. Degrease with solvent.
   c. Sandblast per section 811.06 of Standard Specifications.
   d. Spray paint same day with one full coat of "Inorganic Zinc Primer", dry thickness to be 3/4 to 2.0 mm. Primer shall conform to subsection 1008.03 Louisiana Standard Specifications, as manufactured by Mobil Chemical Co. or Exxon Chemical Co.
5. When placing shims, the joint between one pair of shims shall be rotated through 90° ±15° from the joint of previously placed pair of shims or washer. So that in no case shall the joints of any adjacent pairs of shims be in line.

APPROVED
For Design, Material & Workmanship
Frankland & Lienhard
By I.V. 6-8-81

APPROVED
FOR SIZE OF MATERIAL AND STRENGTH OF CONNECTIONS
BRIDGE DESIGN SECTION
LOUIS A. GARRIDO BRIDGE DESIGN ENGINEER
By REB Date JUN 15 1981

RECEIVED
MAY 20 1981

MAY 19 1981

Contractor: WILLIAMS BROTHERS CONSTRUCTION CO., INC. THI INTERNATIONAL, INC.

Engineer: FRANKLAND AND LIENHARD - MODLESKI AND MASTERS

Project: MISSISSIPPI RIVER BRIDGE (LUTCHG) MAIN RIVER CROSSING SUPERSTRUCTURE ST. CHARLES PARISH

PROJECT NUMBER: 450-37-02 FAP. 1-310-4(35)22

NOTICE: THIS DRAWING IS THE EXCLUSIVE PROPERTY OF THE PRESCON CORP. AND ALL INFORMATION SHOWN MAY NOT BE USED FOR THE DRAWING REPRODUCED WITHOUT WRITTEN PERMISSION OF THE PRESCON CORP.

Freyssinet PRESCON

THE PRESCON CORPORATION
8918 TESORO DRIVE
SAN ANTONIO, TEXAS
78217
a freyssinet international company

Tolerances: UNLESS NOTED FRACTION ± 1/16" DECIMAL ± .010 ANGLE ± 1/2°

MAT'L WGT. OF SIZE | FINISHED WGT. | MAX. & MIN HARDNESS | HEAT TREAT | FINISH | NEXT ASSEMBLY

MATERIAL SPECIFICATIONS: A-588

DRAWN BY: M. REBENDEZ | APPROVED BY: M. W. Hoffner | SCALE: NTS | APPROVAL DATE: 11-1-81

PART NAME: BOTTOM SPLIT WASHER

DRAWING NUMBER: BSW-100 REV. 5

DATE	REVISION DESCRIPTION	REV. NO.
2-11-80	AS PER I.H.I., GENERAL REV.	1
9-12-80	AS PER I.H.I., GENERAL REV.	2
11-3-80	AS NOTED - I.H.I. REDESIGN	3
5-5-81	GENERAL REVISIONS	4
6-3-81	AS NOTED	5

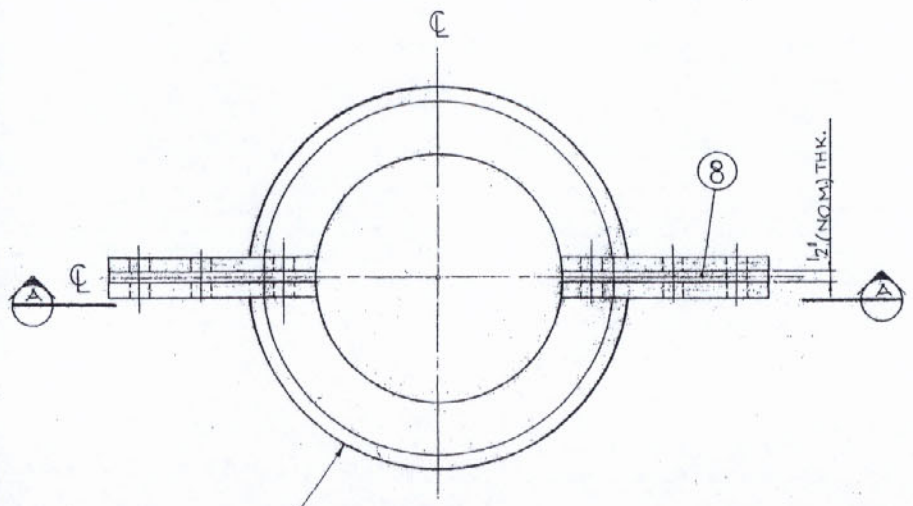

PLAN

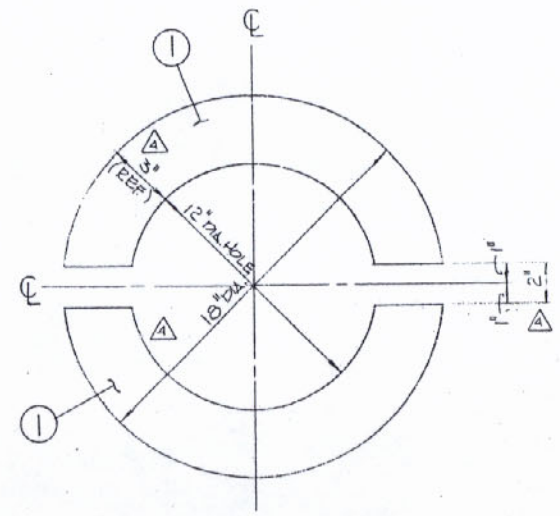

1 - TOP PLATE

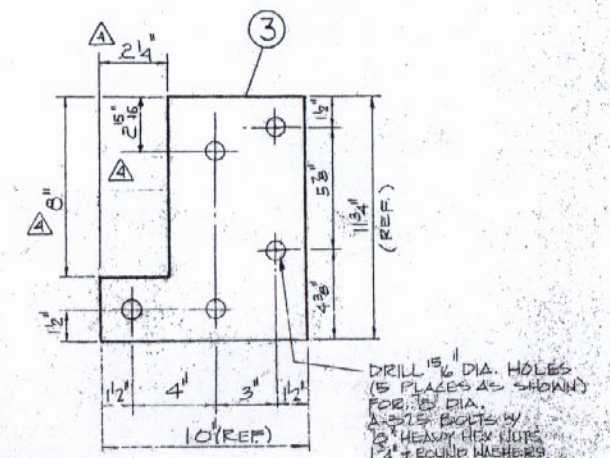

3 - EAR

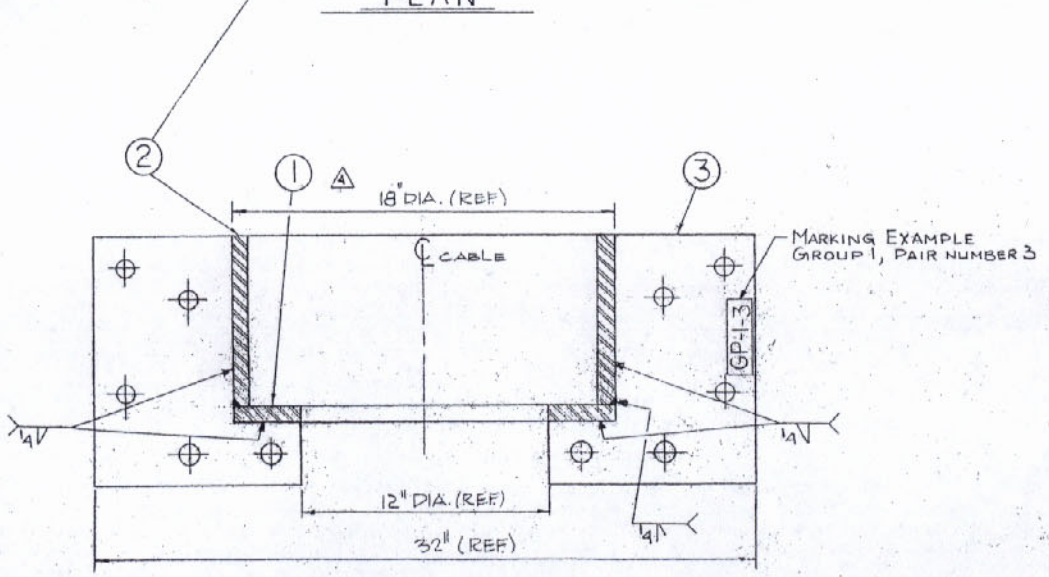

VIEW A-A

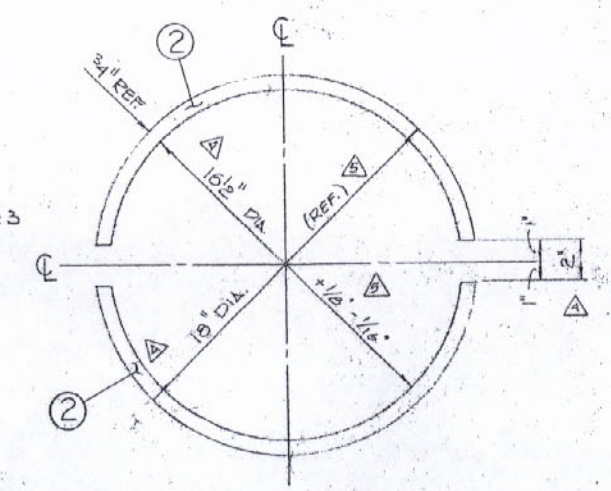

2 - SIDE PLATE

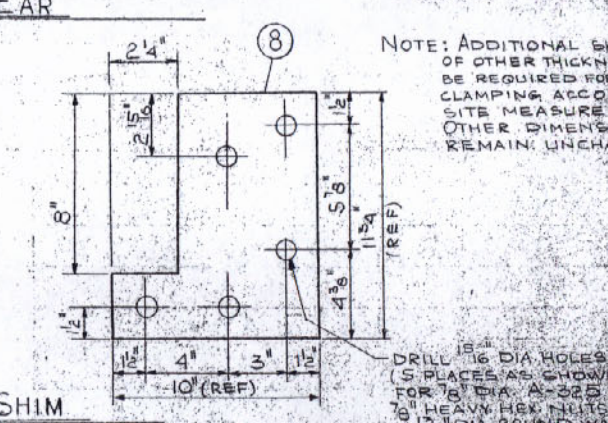

8 - SHIM

NOTE: ADDITIONAL SHIMS OF OTHER THICKNESSES MAY BE REQUIRED FOR TIGHT CLAMPING ACCORDING TO SITE MEASUREMENTS. OTHER DIMENSIONS REMAIN UNCHANGED.

NOTES:

1. All socket clamp pieces are to be assembled utilizing a jig fixture.
2. Matched pairs should be assembled and checked for hole alignment, then group number and pair-marking number to be stamped in the positions shown on the drawing.
3. Shop coat paint, the procedure for the shop coat paint should be as follows:
   a. All weld spatter and other undesirable materials shall be removed and sharp edges ground smooth for metal surfaces prior to blast cleaning. (Round edges to between 1/16" R and 1/8" R.)
   b. Degrease with solvent.
   c. Sandblast per section 811.06 of standard specifications.
   d. Spray paint same day with one full coat of "Inorganic Zinc Primer", dry thickness to be 3/4 to 2.0 mm. Primer shall conform to subsection 1008.03 Louisiana Standard Specifications, as manufactured by Mobil Chemical Co. or Exxon Chemical Co.

8	2	STEEL	1/2" PL x 11 3/4" x 10"	A-588	SHIM	—
7	10	STEEL	7/8" I.D. x 1 3/4" O.D.	—	FLAT WASHER	NOT SHOWN
6	10	STEEL	7/8"-9 UNC	A325	HEAVY HEX NUT	NOT SHOWN
5	4	STEEL	7/8"-9UNC x 4 1/2" LG	A325	HEX HEAD BOLT	NOT SHOWN
4	6	STEEL	7/8"-9UNC x 3 1/2" LG	A-325	HEX HEAD BOLT	NOT SHOWN
3	4	STEEL	3/4" PL x 11 3/4" x 10"	A-588	EAR	—
2	2	STEEL	3/4" PL x 8" ROLLED 16" I.D.	A-588	SIDE PLATE	—
1	2	STEEL	3/4" PL x 18" O.D. x 12" I.D.	A-588	TOP PLATE	—
ITEM NO.	NO. REQ'D	MATERIAL	MATERIAL SIZE	SPEC.	DESCRIPTION	REMARKS

APPROVED
For Design, Material & Workmanship
Frankland & Lienhard
By T. T. 6-16-81

APPROVED SUBJECT TO SATISFACTORY INSTALLATION AND OPERATION
BRIDGE DESIGN SECTION
By REB Date JUN 23 1981
BRIDGE DESIGN ENGINEER

RECEIVED JUN 8 1981
JUN 5 1981

Contractor: WILLIAMS BROTHERS CONSTRUCTION CO., INC. & IHI INTERNATIONAL, INC.
Engineer: FRANKLAND AND LIENHARD w MODJESKI AND MASTERS
Project: MISSISSIPPI RIVER BRIDGE (LULING) MAIN RIVER CROSSING SUPERSTRUCTURE ST. CHARLES PARISH
PROJECT NUMBER: 450-57-02 FAP 1-310-4(35)223 STATE: LOUISIANA

NOTICE: THIS DRAWING IS THE EXCLUSIVE PROPERTY OF THE PRESCON CORP. AND THE INFORMATION SHOWN MAY NOT BE USED NOR THE DRAWING REPRODUCED WITHOUT WRITTEN PERMISSION OF THE PRESCON CORP.

Freyssinet PRESCON
THE PRESCON CORPORATION
8918 TESORO DRIVE
SAN ANTONIO, TEXAS
78217

Tolerances: FRACTION ± 1/16; DECIMAL ±; ANGLE ±
MATL. WGT. OR SIZE | FINISHED WGT. | MAX. & MIN. HARDNESS | HEAT TREAT | FINISH 250 | HEAT ASSEMBLE
MATERIAL SPECIFICATIONS: SEE PARTS LIST
DRAWN BY: TOM TA
CHECKED BY: M.N. MOSLER
DATE: 10-15-79
APPROVED DATE: 10-15-79
GROUP # SOCKET CLAMP
DRAWING NUMBER: SC-101 REV. 5

DATE	REVISION DESCRIPTION	REV. NO.
2-11-80	AS PER I.H.T. GENERAL REV.	1
6-13-80	AS NOTED	2
9-12-80	AS PER I.H.T. GENERAL REV.	3
8-3-81	AS NOTED & I.H.T. REDESIGN	4
6-5-81	GENERAL REVISIONS	5
6-5-81	AS NOTED	6

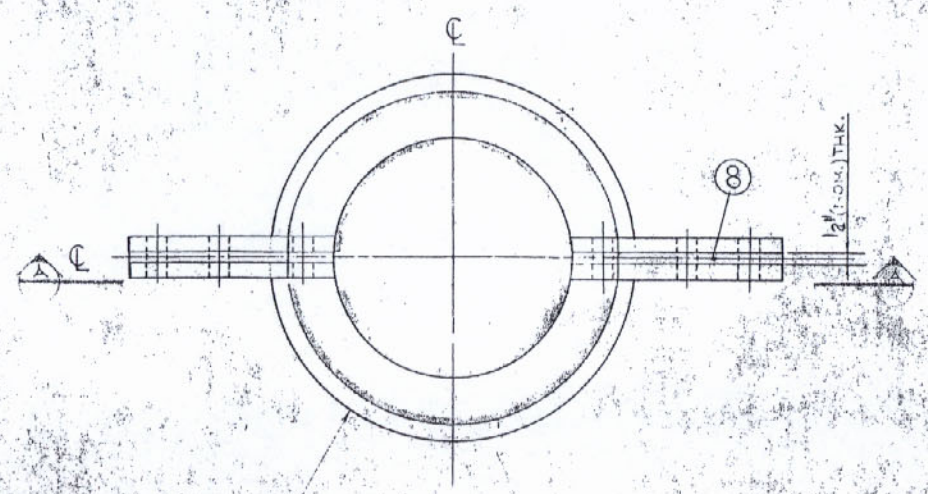

PLAN

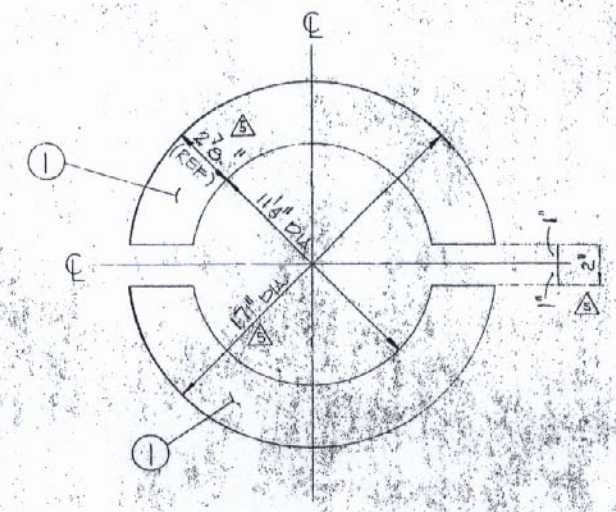

1 — TOP PLATE

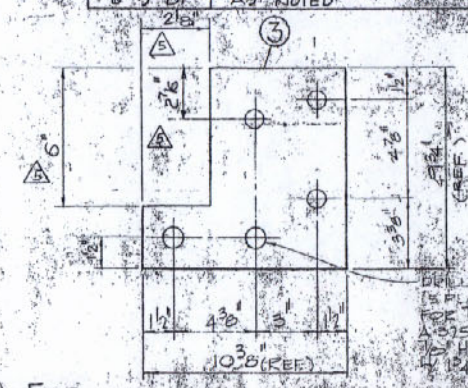

3 - EAR

NOTE: ADDITIONAL SHIMS OF OTHER THICKNESSES MAY BE REQUIRED FOR TIGHT CLAMPING ACCORDING TO SITE MEASUREMENTS. OTHER DIMENSIONS REMAIN UNCHANGED.

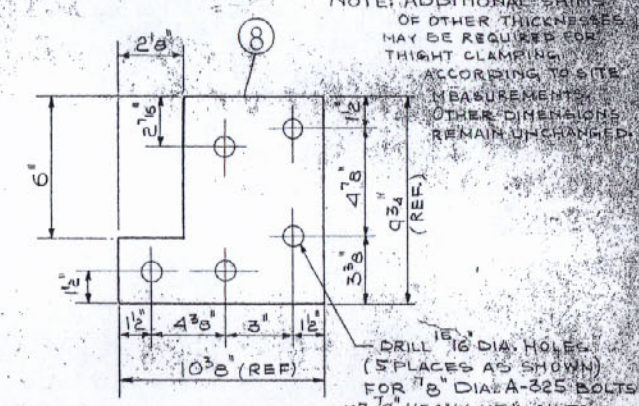

8 - SHIM

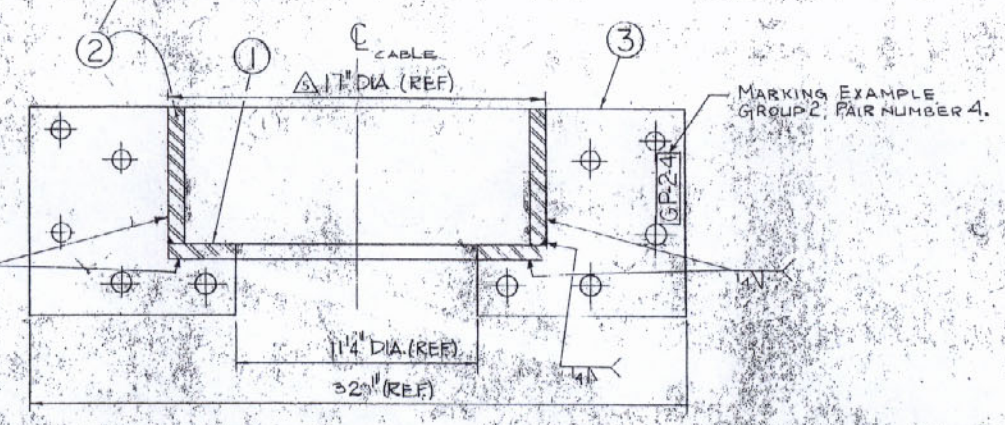

VIEW A-A

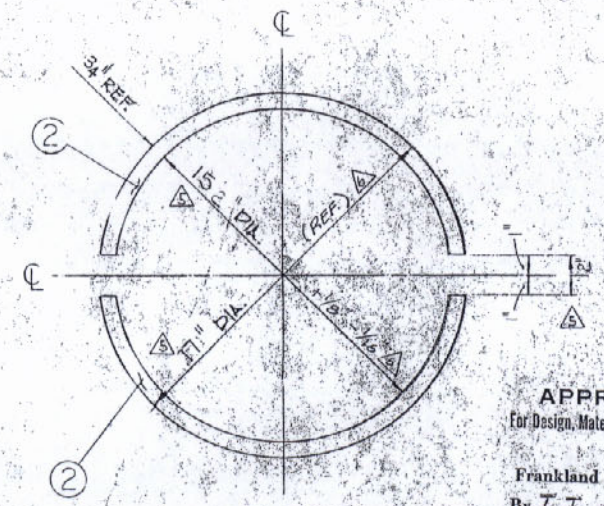

2 - SIDE PLATE

NOTES:

1. All socket assy. pieces are to be assembled utilizing a jig fixture, by Dupreene with solvent.
2. Matched pairs should be assembled and checked for bolt alignment. Each group number and pair marking number to be stamped on the positions shown on the drawing.
3. Shop coat paint. The procedure for the shop coat paint should be as follows:
   a) All weld spatter and other undesirable materials shall be removed and sharp edges ground smooth for metal surfaces prior to blast cleaning. (Round edges between 1/16" R and 1/8" R.)
   b) Spray paint same day without full coat of "Dorgards Zinc Primer", dry-film thickness to be 3/4 to 2.0 mils. Primer shall conform to subsection 1008.03 Louisiana Standard Specifications, as manufactured by Mobil Chemical Co. or Exxon Chemical Co.

APPROVED
For Design, Material & Workmanship.
Frankland & Lienhard
By T. T. 6-16-81

RECEIVED JUN 3 1981

RECEIVED JUN 5 1981

APPROVED SUBJECT TO SATISFACTORY INSTALLATION AND OPERATION
BRIDGE DESIGN SECTION
LOUIS A. CARBIDO - BRIDGE DESIGN ENGINEER
Date JUN 23 1981
RAB

ITEM NO.	QTY. REQ'D	MATERIAL	MATERIAL SIZE	SPEC	DESCRIPTION	DRAWING NO.
8	2	STEEL	1/2" PL x 9 3/4" x 10 3/8"	A-588	SHIM	
7	10	STEEL	7/8" I.D. x 1 3/4" OD	—	FLAT WASHER	NOT SHOWN
6	10	STEEL	7/8"-9 UNC	A-325	HEAVY HEX. NUT	NOT SHOWN
5	4	STEEL	7/8"-9 UNC x 4 1/2 LG.	A-325	HEX HEAD BOLT	NOT SHOWN
4	6	STEEL	7/8"-9 UNC x 3 1/2 LG.	A-325	HEX HEAD BOLT	NOT SHOWN
3	4	STEEL	3/4" PL x 9 3/4" x 10 3/8"	A-588	EAR	
2	2	STEEL	3/4" PL x 6" R.U.T.C. 15 1/2" I.D.	A-588	SIDE PLATE	
1	2	STEEL	3/4" PL x 17" O.D. x 11 1/4" I.D.	A-588	TOP PLATE	

Contractor: WILLIAMS BROTHERS CONSTRUCTION CO., INC. IHI INTERNATIONAL, INC.

Engineer: FRANKLAND AND LIENHARD - MODJESKI AND MASTERS

PROJECT: MISSISSIPPI RIVER BRIDGE (LULING) MAIN RIVER CROSSING SUPERSTRUCTURE ST. CHARLES PARISH

PROJECT NUMBER	STATE
450-03-02 FAP. I-310-1(15)223	LOUISIANA

NOTICE: THIS DRAWING IS THE EXCLUSIVE PROPERTY OF THE PRESCON CORP. AND THE INFORMATION SHOWN MAY NOT BE USED NOR THE DRAWING REPRODUCED WITHOUT WRITTEN PERMISSION OF THE PRESCON CORP.

Freyssinet PRESCON

THE PRESCON CORPORATION
8918 TESORO DRIVE
SAN ANTONIO, TEXAS
78217

A Freyssinet International Company

Tolerances: Fraction ± 1/16"; Decimal ± ; Angle ±

MATL. NOT AS SHOWN — FINISHED PART — MAX. & MIN. HARDNESS — MATERIAL SPECIFICATIONS: SEE PARTS LIST

HEAT TREAT — FINISH — HEAT PROCESS: SO

DRAWN BY: T. FORREST — SCALE: NONE — APPROVED BY: — DATE: 2-11-80

PART NAME: GROUP II SOCKET CLAMP

DRAWING NUMBER: SC-102

DATE	REVISION DESCRIPTION	REV. NO.
2-11-80	AS PER I.H.I., GENERAL REV.	1
8-13-80	AS NOTED	2
9-15-80	AS PER I.H.I., GENERAL REV.	3
11-3-80	AS NOTED - I.H.I. REDESIGN	4
5-5-81	GENERAL REVISIONS	5
6-5-81	AS NOTED	6

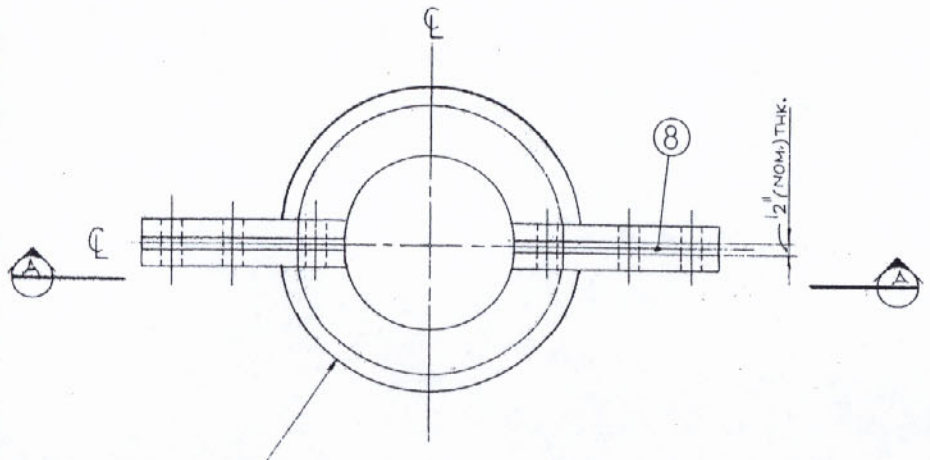

PLAN

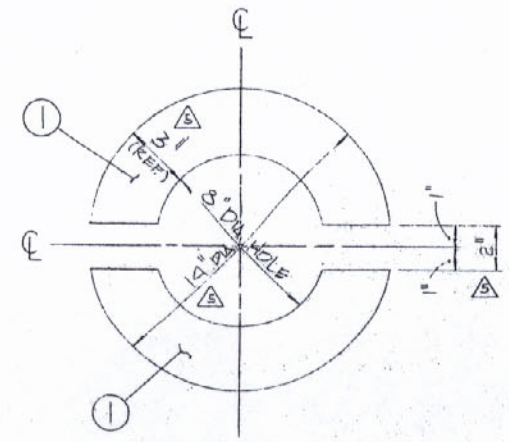

1 - TOP PLATE

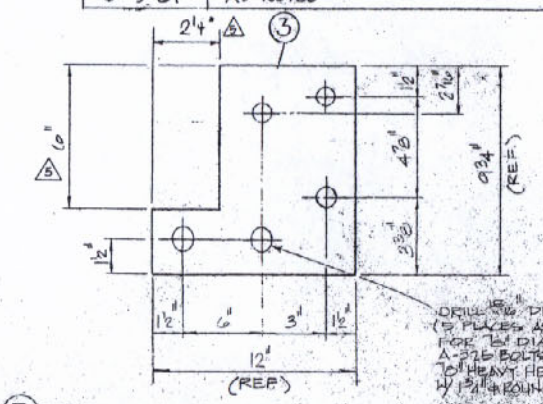

3 - EAR

NOTE: ADDITIONAL SHIMS OF OTHER THICKNESSES MAY BE REQUIRED FOR THIGHT CLAMPING ACCORDING TO SITE MEASUREMENTS. OTHER DIMENSIONS REMAIN UNCHANGED.

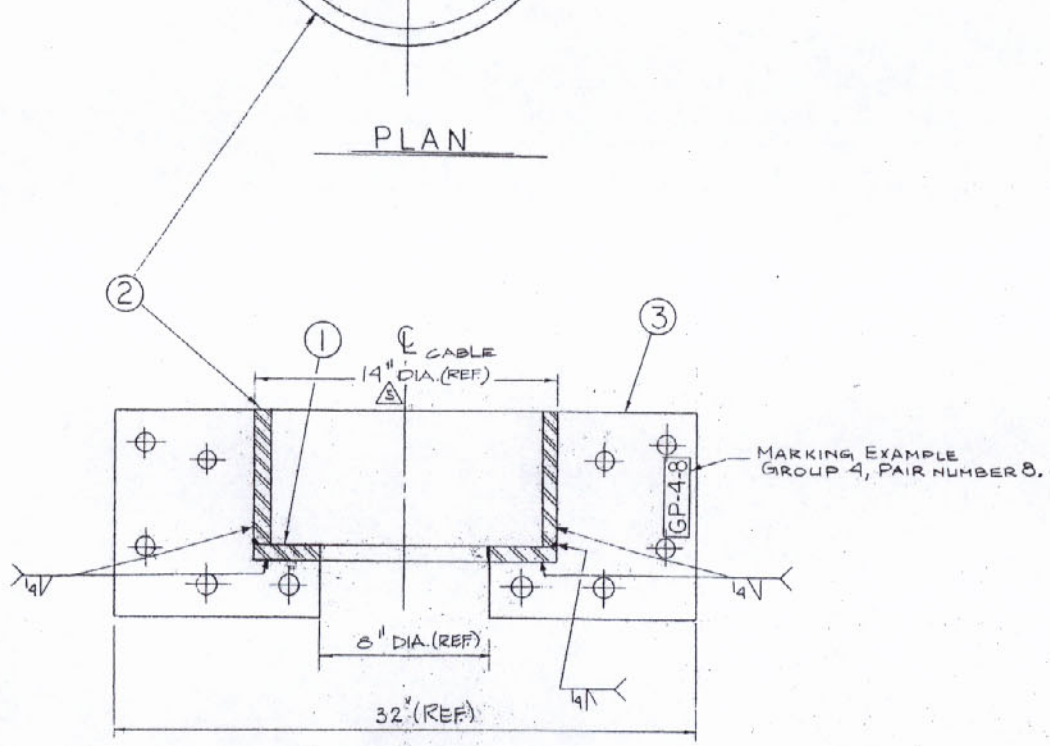

VIEW A-A

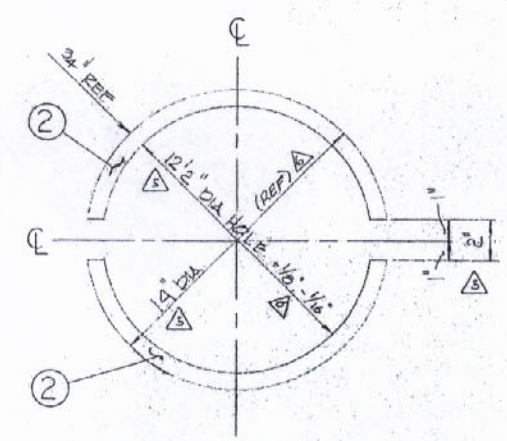

2 - SIDE PLATE

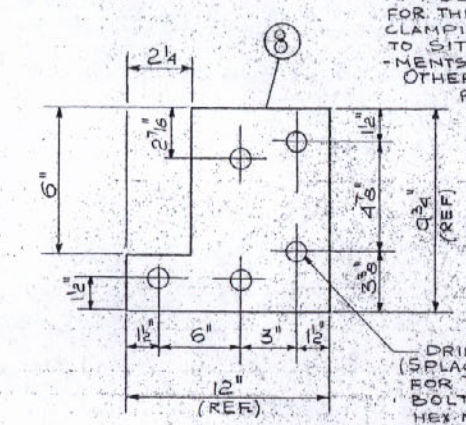

8 - SHIM

NOTES:

1. All socket clamp pieces are to be assembled utilizing a jig fixture.
2. Matched pairs should be assembled and checked for hole alignment, then group number and pair-marking number to be stamped on the positions shown on the drawing.
3. Shop coat paint, the procedure for the shop coat paint should be as follows:
   a. All weld spatter and other undesirable materials shall be removed and sharp edges ground smooth for metal surfaces prior to blast cleaning. (Round edges to between 1/16" R and 1/8" R.)
   b. Degrease with solvent.
   c. Sandblast per section 811.05 of standard specifications.
   d. Spray paint same day with one full coat of "Inorganic Zinc Primer", dry thickness to be 3/4 to 2.0 mm. Primer shall conform to subsection 1008.03 Louisiana Standard Specifications, as manufactured by Mobil Chemical Co. or Exxon Chemical Co.

APPROVED
For Design, Material & Workmanship

Frankland & Lienhard
By T. T. 6-16-81

APPROVED SUBJECT TO SATISFACTORY INSTALLATION AND OPERATION
BRIDGE DESIGN SECTION
LOUIS A. GARRIDO BRIDGE DESIGN ENGINEER
By REB Date JUN 23 1981

RECEIVED JUN 3 1981
RECEIVED JUN 5 1981

ITEM NO.	QTY. REQ'D.	MATERIAL	MATERIAL SIZE	SPEC.	DESCRIPTION	DRAWING
8	2	STEEL	1/2" PL x 9 3/4" x 12"	A-588	SHIM	—
7	10	STEEL	7/8" I.D. x 1 3/4" O.D.	—	FLAT WASHERS	NOT SHOWN
6	10	STEEL	7/8-9 UNC	A-325	HEAVY HEX NUT	NOT SHOWN
5	4	STEEL	7/8-9 UNC x 4 1/2	A-325	HEX HEAD BOLT	NOT SHOWN
4	6	STEEL	7/8-9 UNC x 3 1/2	A-325	HEX HEAD BOLT	NOT SHOWN
3	4	STEEL	3/4" PL x 7 3/4" x 11"	A-588	EAR	
2	2	STEEL	3/4" PL 6" ROLLED 12" I.D.	A-588	SIDE PLATE	—
1	2	STEEL	3/4" PL x 19" O.D. x 8" I.D.	A-588	TOP PLATE	—

Contractor: WILLIAMS BROTHERS CONSTRUCTION CO., INC. IHI INTERNATIONAL, INC.

Engineer: FRANKLAND AND LIENHARD - MISSISSIPPI AND MISSOURI

Project: MISSISSIPPI RIVER BRIDGE (LULING) MAIN RIVER CROSSING SUPERSTRUCTURE ST. CHARLES PARISH

STATE: LOUISIANA

NOTICE: THIS DRAWING IS THE EXCLUSIVE PROPERTY OF THE PRESCON CORP. AND THE INFORMATION SHOWN MAY NOT BE USED NOR THE DRAWING REPRODUCED WITHOUT WRITTEN PERMISSION OF THE PRESCON CORP.

Freyssinet PRESCON

THE PRESCON CORPORATION
8918 TESORO DRIVE
SAN ANTONIO, TEXAS
78217

Tolerances: FRACTION ± 1/16; DECIMAL ±; ANGLE ±

MATL. NOT OF SIZE | FINISHED NOT. | MAX. & MIN. HARDNESS | HEAT TREAT | FINISH | SEAT ASSEMBLY

MATERIAL SPECIFICATIONS: SEE PARTS LIST

DRAWN BY: T. FREEMAN | APPROVED BY | SCALE | APPROVAL DATE

PART NAME: GROUP V SOCKET CLAMP

DRAWING NUMBER: SC-103