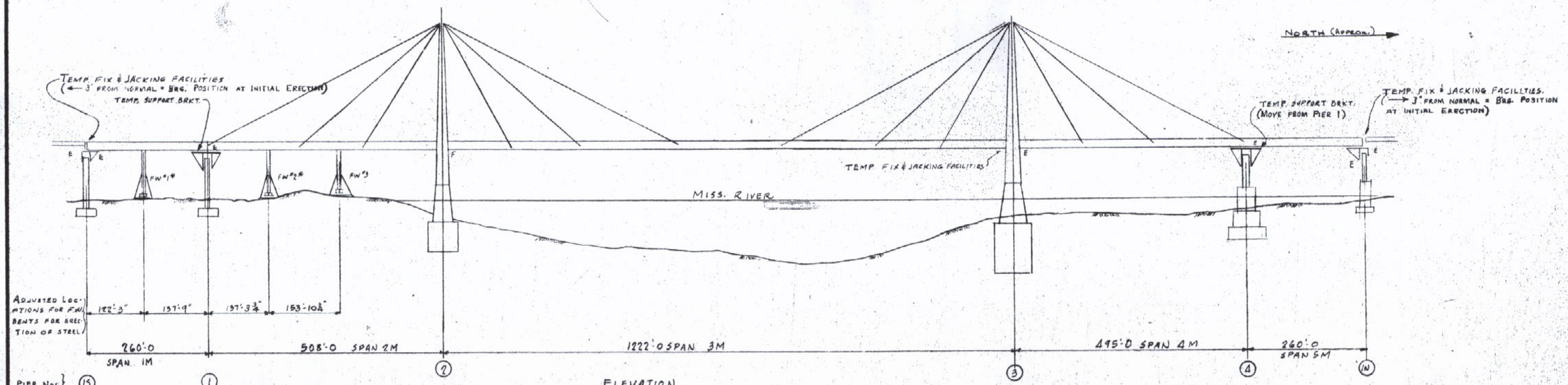

ELEVATION
Scale 1" = 100'

*UPON COMPLETION OF ERECTION STAGE 3S, BENT FW-1 IS TO BE RELEASED AND THEN RELOCATED AND REASSEMBLED TO FORM BENT FW-2

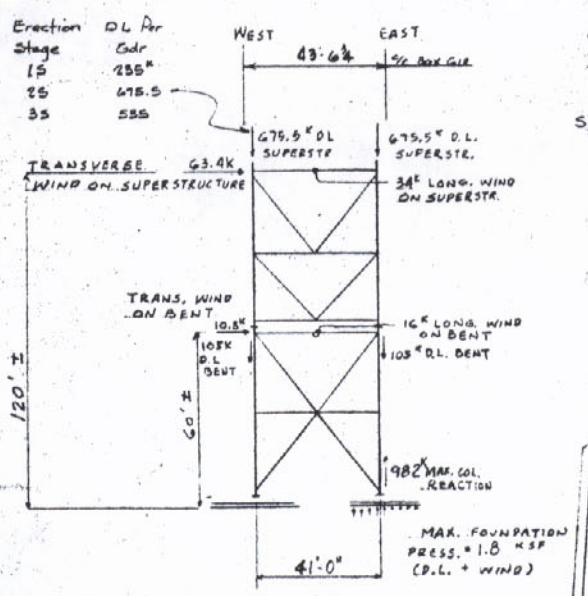

FALSEWORK BENT 1

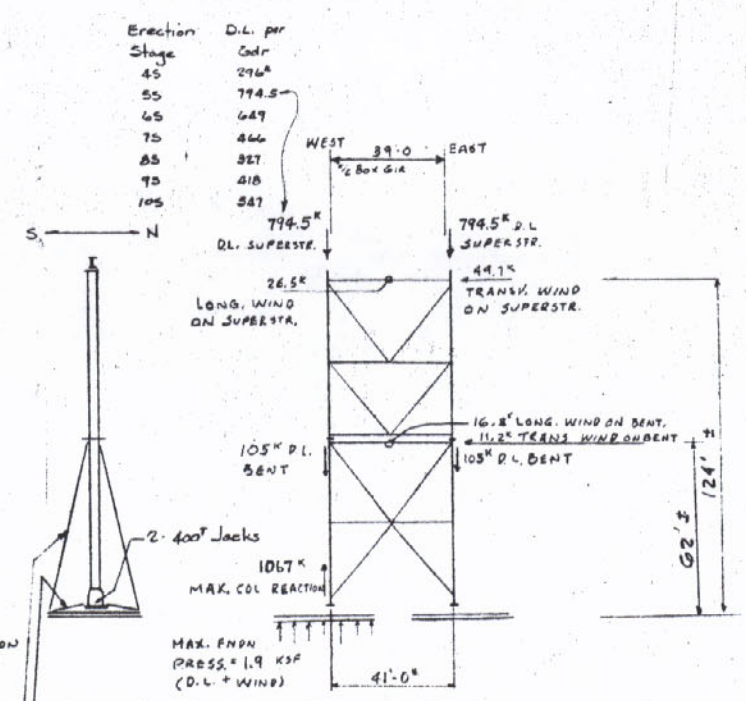

FALSEWORK BENT 2

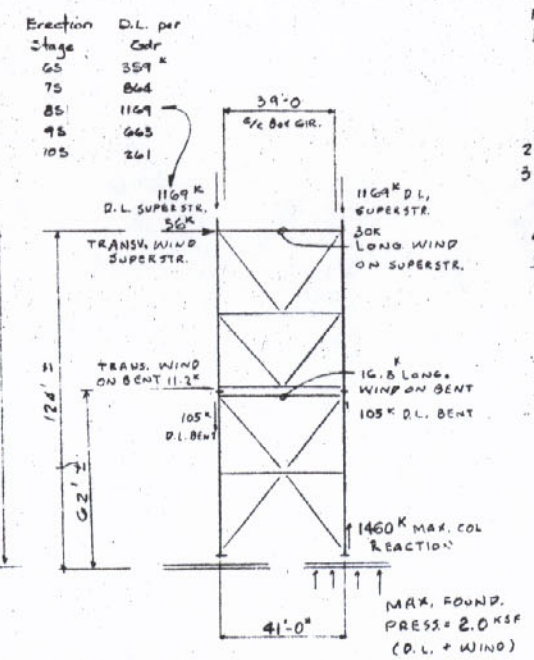

FALSEWORK BENT 3

TEMP. KICKER CABLE - ¾"ϕ AT EACH COLUMN.
TEMP. GUY CABLE - ¾"ϕ AT EACH COLUMN.
(REQ'D IN LONGITUDINAL DIRECTION ONLY)
CABLES ARE SECURED TO GRILLAGE.

NOTES:

1. FALSEWORK BENT COLS., DIAG. & STRUTS ARE SUPPLIED BY MELBOURNE BROS. AND ARE SHOWN ON ALLIER STRUCTURAL STEEL DWGS. FW1 & FW2 AS "SEATTLE TYPE FALSEWORK."
   COLS. ARE ASTM A242 WITH DESIGN CAP. 826 T PER COL.
   DIAG. & STRUTS STEEL IS A7. PINS ARE COLD ROLLED STEEL. NEW PLATE AND ANGLES ARE A36. 14 WF 237 GRILLAGE IS FROM ALLIER STRUC. STEEL, MARK 7A, AND IS A7 STEEL.
   PIECE MARKS INDICATED ARE FOR FIELD ASSEMBLY.
2. W14×73 PILES USED IN GRILLAGE SHALL BE A36 MIN.
3. WOODEN TIMBERS USED FOR MUDSILLS SHALL BE OF 12" × 12" NOMINAL SIZE AND OF GOOD STRUCTURAL QUALITY OR CRANE MATS.
4. SEE FW-2 FOR F.W. BENT ASSEMBLY.
5. JACKING CAPACITY REQUIRED: 2-400T JACKS AT BASE OF EACH BENT COLUMN.
6. SHIM REQUIREMENTS AT TOP OF GRILLAGES WILL DEPEND ON THE AMOUNT OF GROUND SETTLEMENT. CHECK ELEVATIONS PERIODICALLY.
7. ALL BOLTED CONNECTIONS FOR FALSEWORK BENTS AND THEIR APPURTENANCES SHALL BE MADE USING ⅞"ϕ ASTM A325 HIGH STRENGTH BOLTS WITH HEX NUTS & WASHERS UNLESS OTHERWISE NOTED
8. TEMP. FILL UNDER BENT GRILLAGES. FILL MATERIAL PER LDOT STD. SPEC 203.06. COMPACTION IN ACCORDANCE WITH STD. SPEC 203.15.

APPROVED
LOUIS A. GARRIDO
BRIDGE DESIGN ENGINEER
By R.E.B. Date DEC 27 1979

REVISIONS	DATE
Temp. Guy Cable Stage 4 D.L. Mbs	1/14/79
For Review	8/31/78
General	2-8-79

BRIDGE OVER MISS. RIVER
LULING, LOUISIANA

L.A.S.H. PROJECT 450-37-02

FALSEWORK LOCATIONS

THE MELBOURNE BROS. CONSTRUCTION CO.
NORTH CANTON OHIO

JOB NO. 1429 DATE 5 MAR. 1979

SHEET NO. FW1 OF

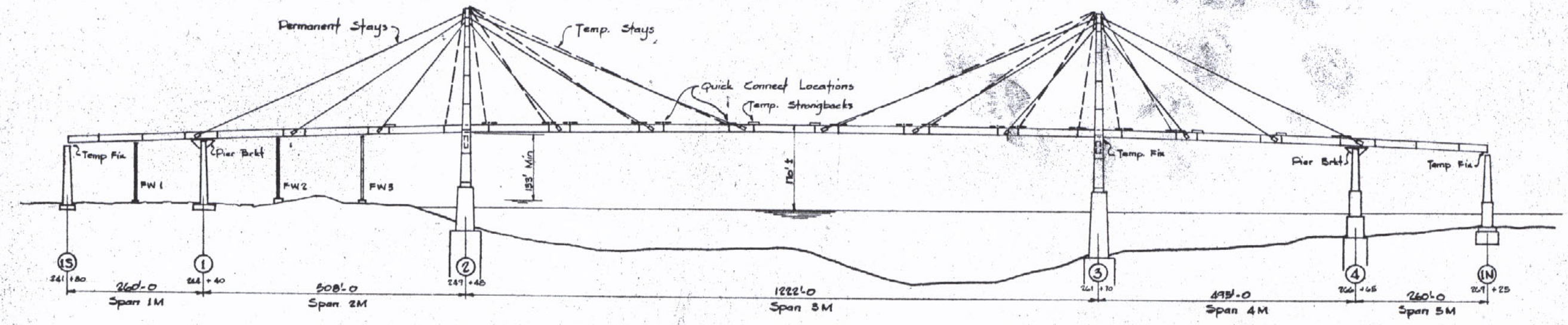

ELEVATION
1" = 100'

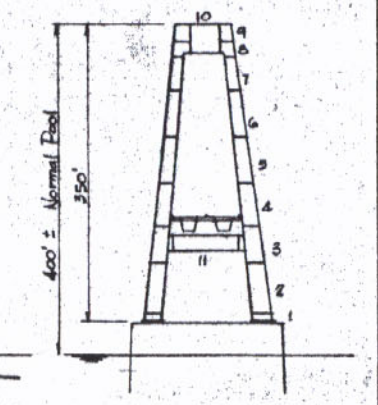

SECTION AT TOWER

INDEX TO DRAWINGS

Title Sheet
1 Work Platform Support Locations
2 Tower Bolting Scaffolds - General Arrangement
3 Tower Bolting - Top Platform & Details
4 Tower Bolting - Ladder & Platform Details
5 Tower Bolting - Layout At T9 & Scaffold Brackets
6 Temporary Tower Strut
7 Land Erection - General Plan & Elevation
8 Land Erection - Crawler Derrick & Anchor Layout
9 Land Erection - Sections At Crawler Derrick
10 Crawler Derrick Anchor & Guy Details
11 Tower Erection - T1 Thru T6 & T11
12 Tower Erection - T7 Thru T10
13 Tower Erection - Rigging Layout
14 Tower Sections - Uprighting For Erection
15 Details Of Lugs For Tower Erection & Uprighting
16 Access & Layout At Pier 2
17 Access & Layout At Pier 3
18 Details At Piers 2 & 3
19 Girder Erection At Piers 2, 3 & 4
20 Girder Erection - Span 3M
21 Girder Erection - Span 4M - Blocks 27 & 28
22 Girder Erection - Span 5M
23 Girder Erection - Span 3M Closing
24 Girder Erection Rigging - Typical Arrangement
25 Erection Rigging Details
26 Erection Rigging Details
27 Not Used
28 Not Used
29 Not Used
30 Not Used
31 Permanent Stay Erection - Arrangement and Procedure
32 Permanent Stay Erection - Typical Rigging Requirements

B1 Storage Barge Layout - Shipment # 1
B2 " " " " # 2
B3 " " " " # 2
B4 " " " " # 3
B5 " " " " # 3
B6 " " " " # 4
B7 " " " " # 4
B8 Storage Barges - Sections For Blocking

FW 1 Falsework Locations
FW 2 Falsework Bents
FW 3 Temporary Fix At Pier 3
FW 4 Alterations To Structure For Fix At Pier 3
FW 5 Alterations To Structure For Fixes At Piers 1S & 1N
FW 6 Falsework Bent Details
FW 7 Temporary Fix At Piers 1S & 1N
FW 8 Pier Bracket For 1 & 4
FW 9 Pier Bracket For 1 & 4 - Blocking Beams
FWD 1 Details of Falsework Bents - Bracing
FWD 2 Details Of Falsework Bents - Bracing
FWD 3 Falsework Bent Support Beam
FWD 4 Falsework Bent Support Beam
FWD 5 Falsework Bents Shim & Fill Plates
FWD 6 Temporary Fix Details For Pier 3
FWD 7 Cribbage Beams For Falsework Beams
FWD 8 Lifting Brackets For Falsework Bents
FWD 9 Concrete Pedestal For Bent 3
FWD 10 Bracing For Temporary Fix At Piers 1S & 1N
FWD 11 Temporary Fix Details For Piers 1S & 1N
FWD 12 Temporary Fix Details For Piers 1S & 1N
FWD 13 Temporary Fix Details For Piers 1S & 1N
FWD 14 Columns For Temporary Fix At 1S & 1N
FWD 15 Jacking Blocks For Temporary Fix At 1S & 1N
FWD 16 To FWD 27 } Pier Bracket Details For 1 & 4
FWD 28 Temporary Fix Details For Piers 1S & 1N

REFERENCE DRAWINGS

Howard, Needles, Tammen, Bergendoff
EP1 - EP4, EP10 - EP23 Erection Procedure & Analysis Data
Strosstek
1 - 7 Temporary Stay Layout & Details
The Contractors Engineer
D1 - D3, 1 - 18 Mobile Work Platform - Design & Detail

RECEIVED
OCT 7 1980

APPROVED
For Design, Materials & Workmanship
Frankland & Lienhard
By T. T. 10-10-80

APPROVED
LOUIS A. GARRIDO
BRIDGE DESIGN ENGINEER
By RFB Date SEP 14 1980

REVISIONS	DATE
Remove S7-30	8/6/80
Add Bents B-32	11/21/79
For Review	8/5/79
For Review	Jul-79

TITLE: SHEET FOR
ERECTION LAYOUT DRAWINGS
LOUISIANA DOT PROJECT # 450-37-02
ST CHARLES PARISH LULING, LA

THE MELBOURNE BROS. CONSTRUCTION CO.
NORTH CANTON OHIO
JOB NO. 1439 DATE 1-10-79
SHEET NO. TITLE OF

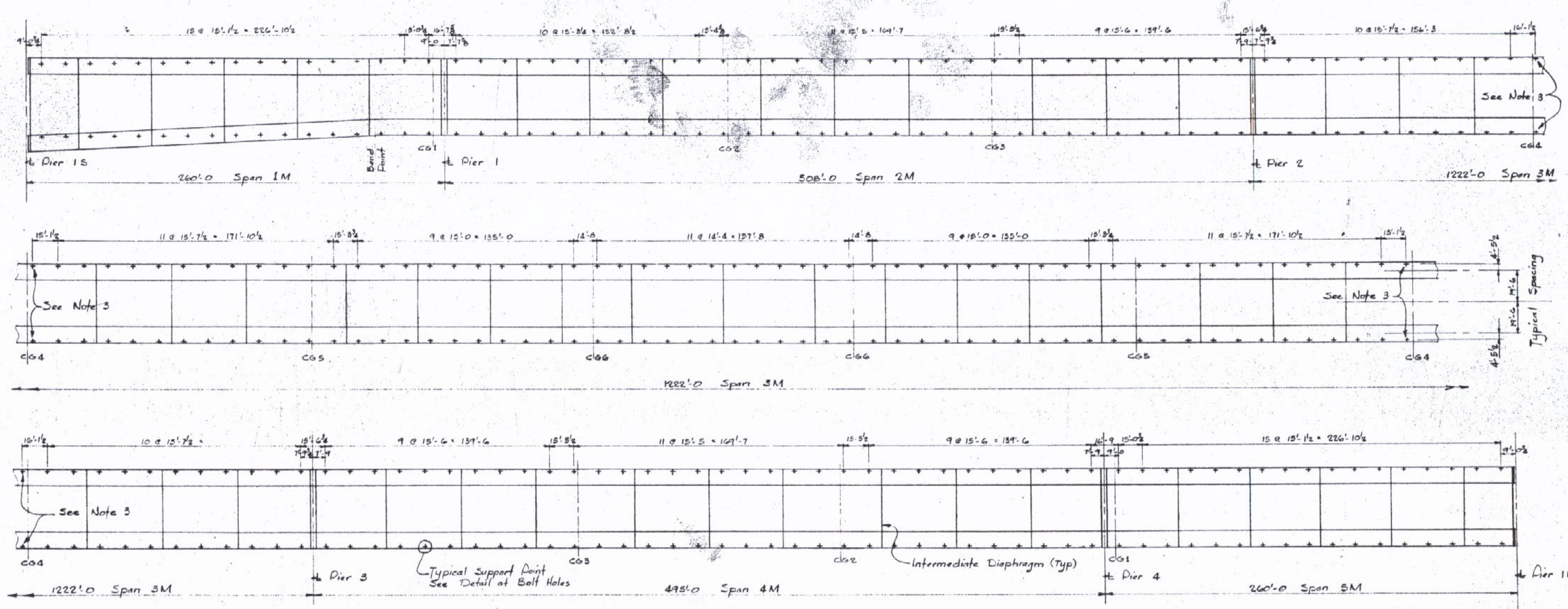

PLAN AT BOTTOM FLANGE
LAYOUT OF WORK PLATFORM SUPPORT POINTS

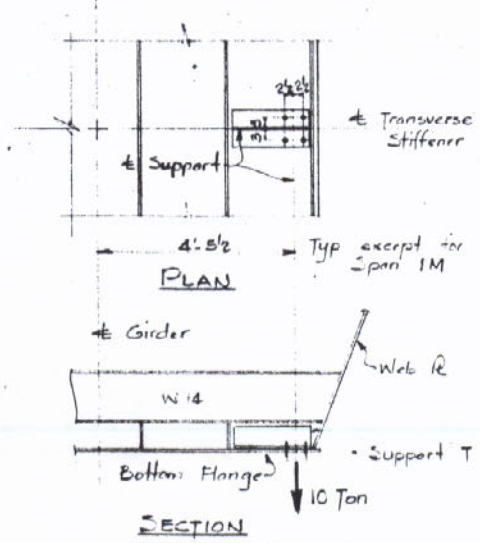

DETAIL AT BOLT HOLES

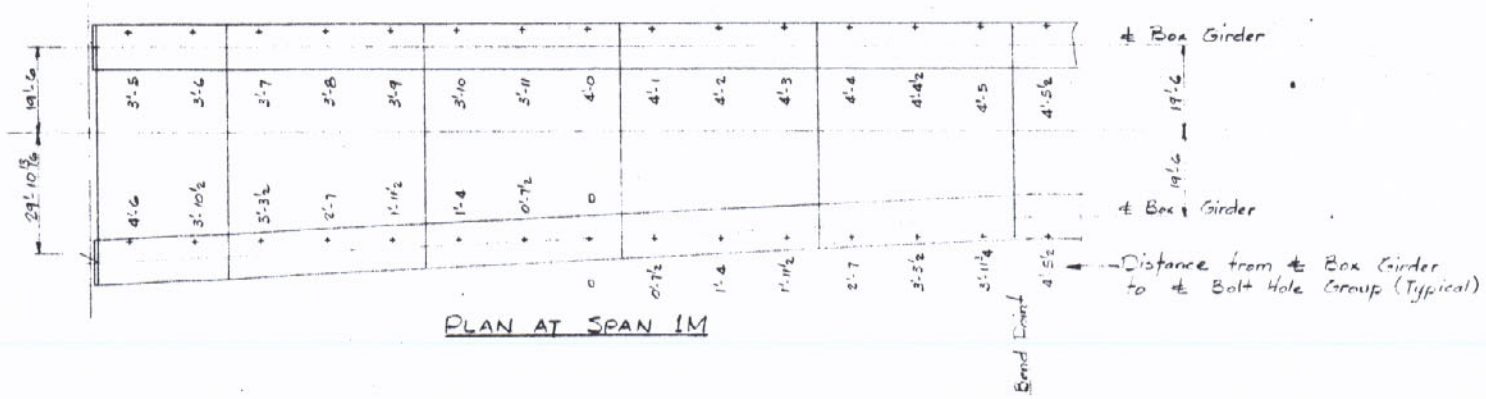

PLAN AT SPAN 1M

NOTES

1. All measurements are in a horizontal plane.
2. Typical bolt hole groups are centered about transverse stiffeners on bottom flange unless noted by Note 3.
3. Bolt hole group is not centered about transverse stiffener where indicated on plan.
4. Holes are 15/16" ⌀

APPROVED
LOUIS A. GARRIDO
BRIDGE DESIGN ENGINEER
By REB Date DEC 27 1979

REVISIONS	DATE	WORK PLATFORM SUPPORT LOCATIONS
		LOUISIANA DOT PROJECT #450-37-02
		ST CHARLES PARISH LULING, LA
		THE MELBOURNE BROS. CONSTRUCTION CO. NORTH CANTON OHIO
		SHEET NO. 1 OF
		JOB NO. 1429 DATE 7-28-78

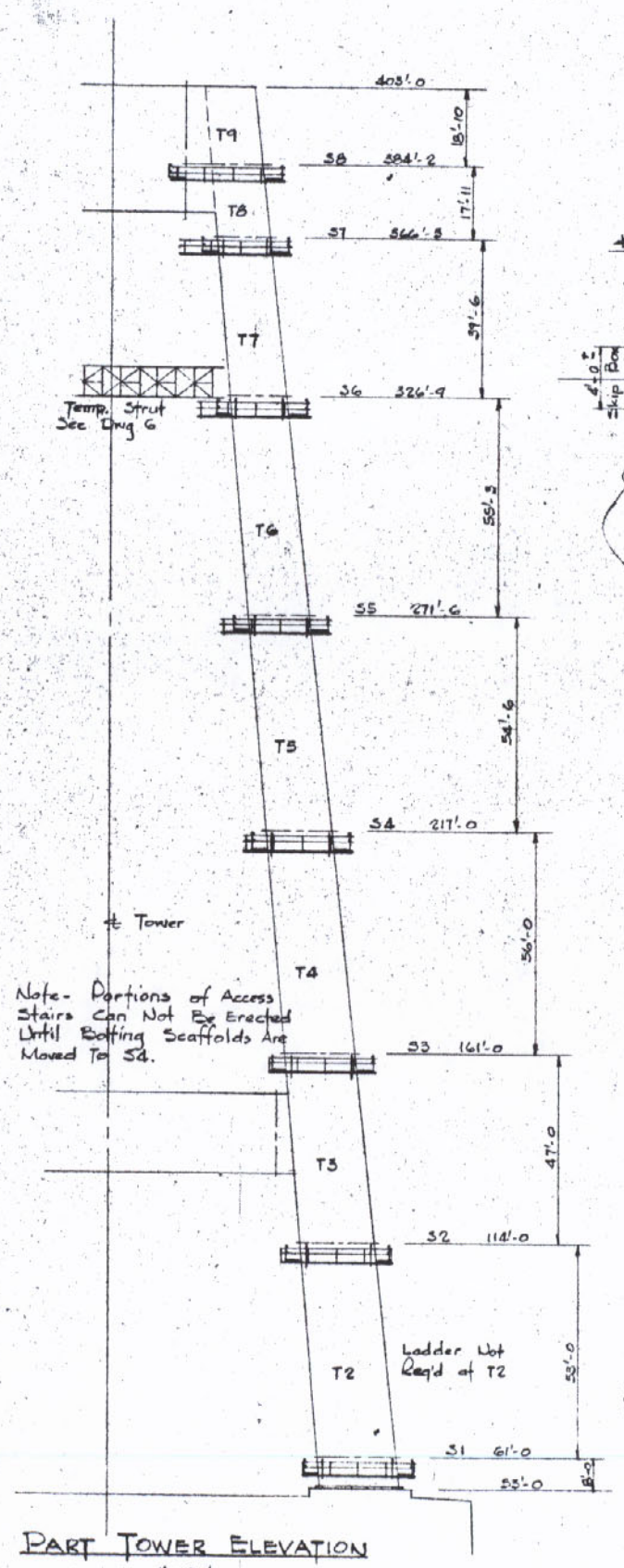

PART TOWER ELEVATION

1" = 20'

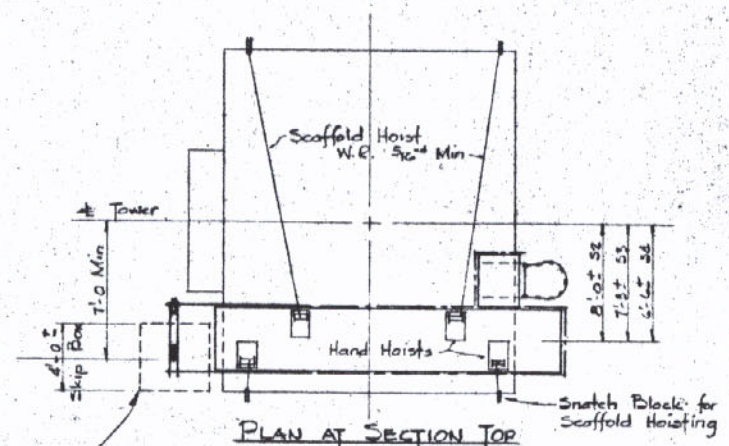

PLAN AT SECTION TOP

SIMILAR AT S2 & S4

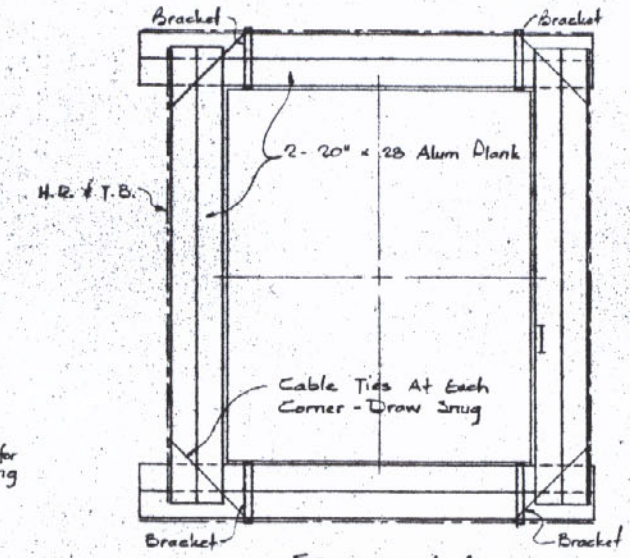

SECTION A-A

PLAN AT SECTION BOTTOM

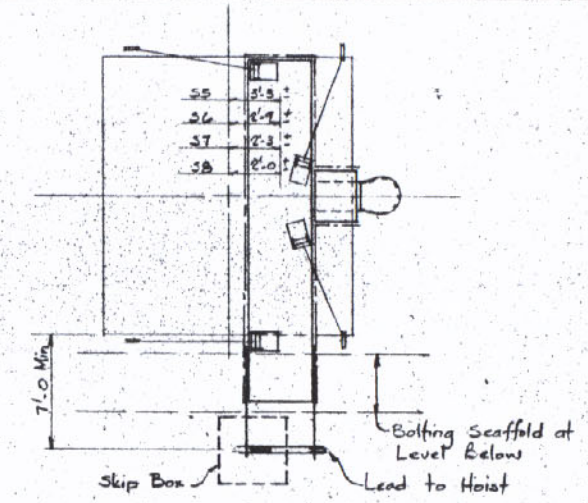

PLAN AT SECTION TOP AT S5

SIMILAR AT S6, S7 & S8

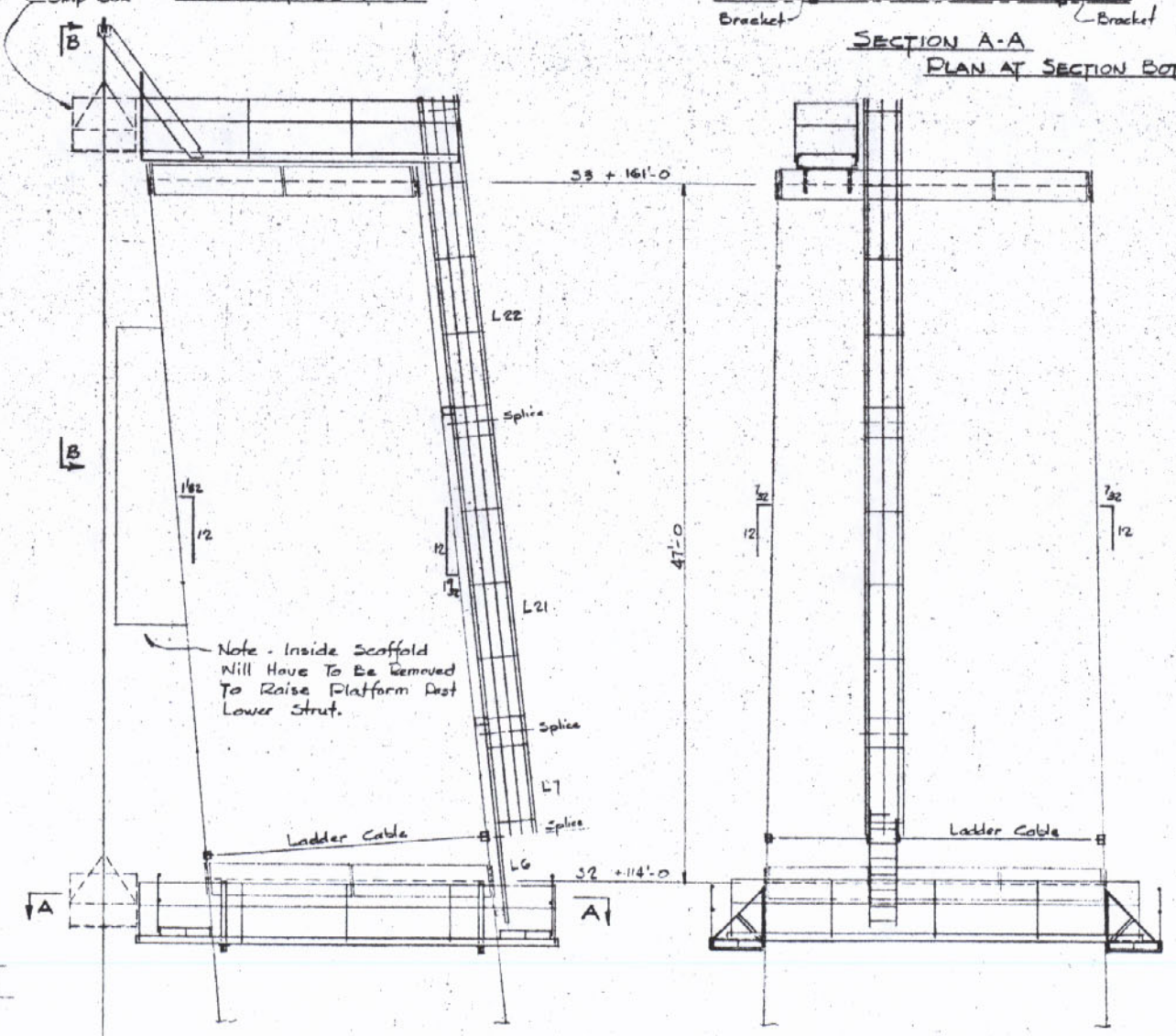

ELEVATION AT SIDE FACE

ELEVATION AT OUTSIDE FACE

TYPICAL VIEWS OF TOWER SECTIONS - SHOWN AT T3

3/16" = 1'-0

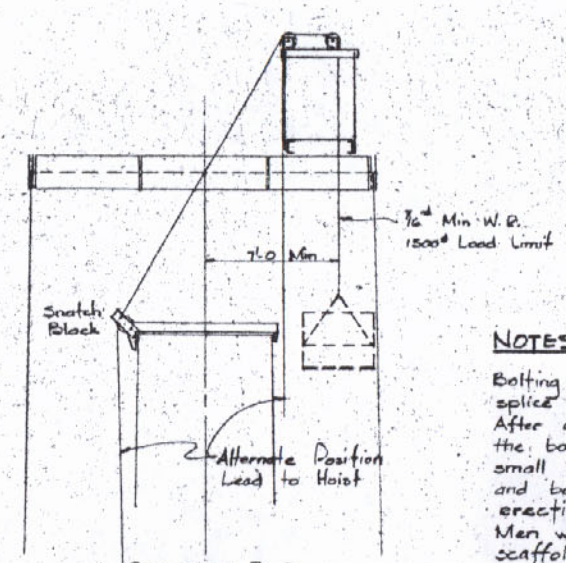

SECTION B-B

SCAFFOLD HOISTING STEPS

1. Attach hoisting lines to scaffold brackets.
2. Secure hoisting lines at top platform by positive locking or clamp device.
3. Loosen and remove scaffold brackets from structure.
4. Remove ladder.
5. Raise scaffolds.
6. Bolt scaffold brackets at splice position.
7. Adjust scaffolds to new size.
8. Check and secure all planks and handrail.

NOTES

Bolting scaffolds are supported at splice points by brackets. Dwg 5. After a splice point is bolted complete, the bolting scaffolds are raised by small hoists at the top platform and bolted into position before erection of the next tower section. Men working on scaffolds at time of scaffold fastening and unfastening must have individual tie-off lines. Men will not ride the bolting scaffolds while hoisting is taking place. After the bolting scaffolds are in place, the top platform is removed for the erection of the next tower section. All tower legs at Piers 2 and 3 will be erected and bolted simultaneously.

APPROVED
For Design, Material & Workmanship
Frankland & Lienhard
By E. S. 8-7-79
FRANKLAND & LIENHARD
CONSULTING ENGINEERS

APPROVED
FOR SIZE OF MATERIAL AND STRENGTH OF CONNECTIONS
BRIDGE DESIGN SECTION
LOUIS A. GAVRIDO BRIDGE DESIGN ENGINEER
By REB Date AUG 8 1979

Work Dwgs 2, 3, 4, 5 Together

TOWER BOLTING SCAFFOLDS

REVISIONS	DATE
For Review	4/4/79

GENERAL ARRANGEMENT

LOUISIANA DOT PROJECT # 450-37-02

ST. CHARLES PARISH LULING, LA

THE MELBOURNE BROS. CONSTRUCTION CO.

NORTH CANTON OHIO

JOB NO. 1-1-2-3 DATE

SHEET NO. 2

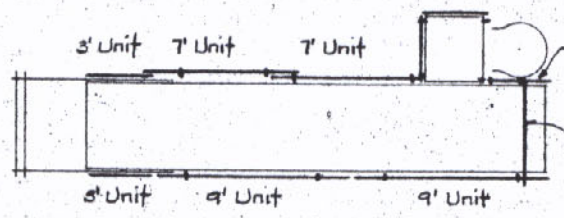

HANDRAIL PLAN S2 - S4

Note - 4½' End Unit Will Use Posts From Other Units

Note - The 3' Units At The Open Ends Will Be Field Welded To The 12" C's.

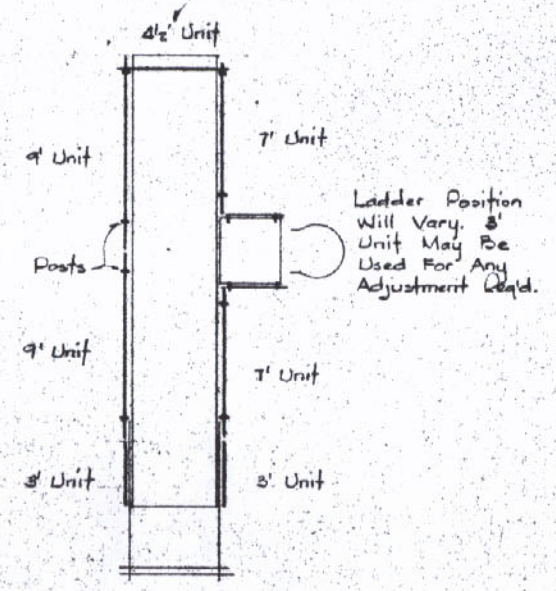

HANDRAIL PLAN S5 TO TOP

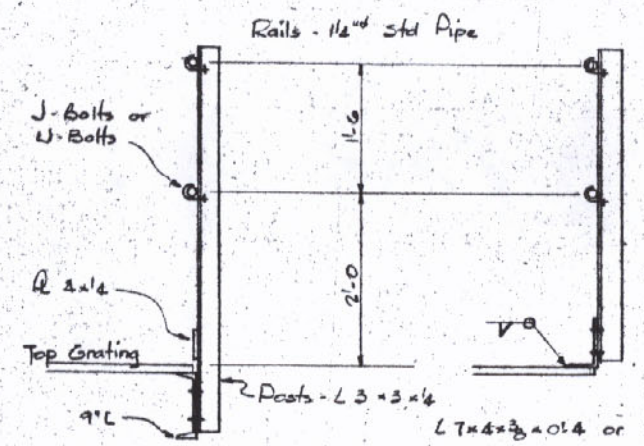

AT TOP PLATFORM

AT LADDER PLATFORM

HANDRAIL DETAILS

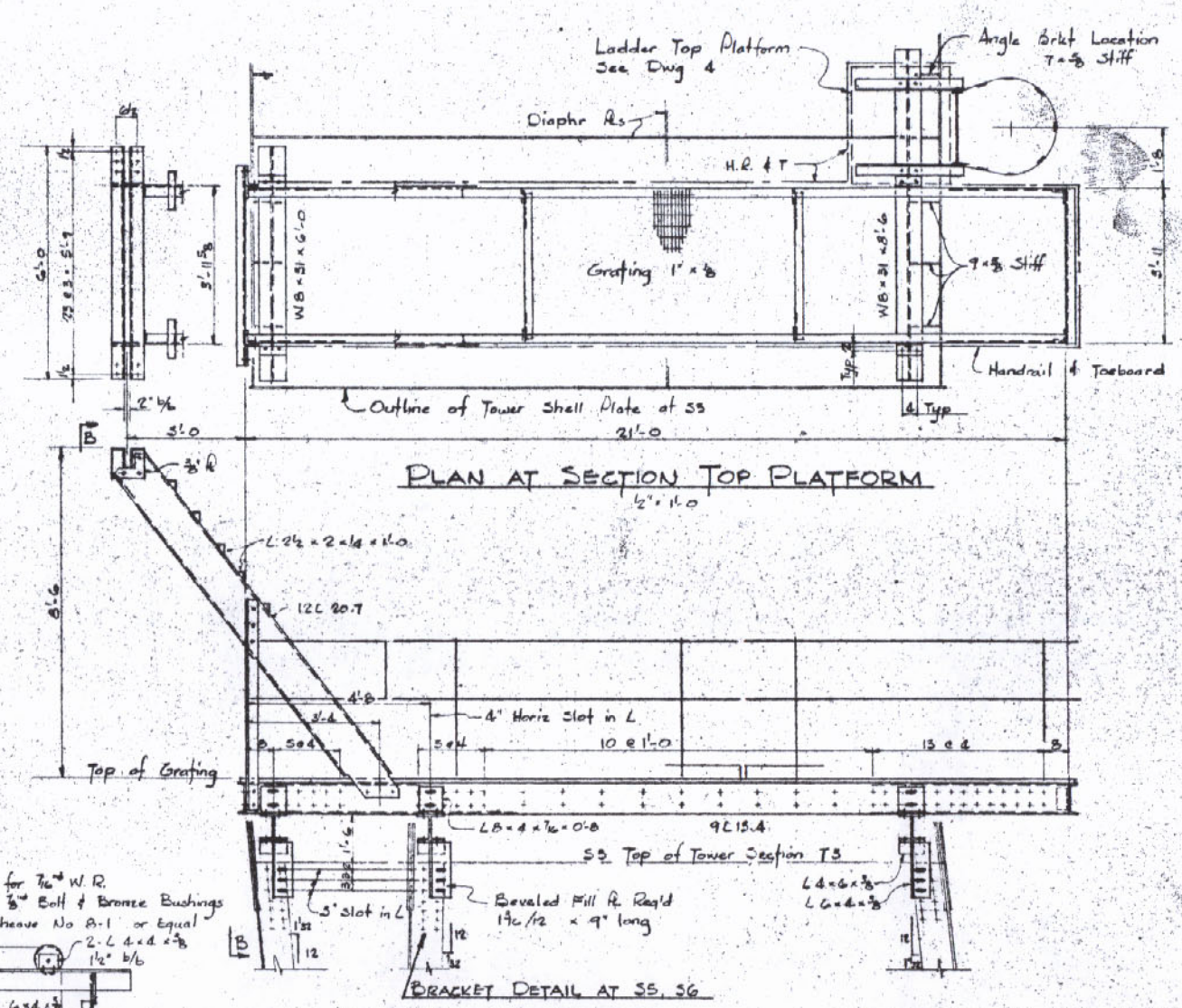

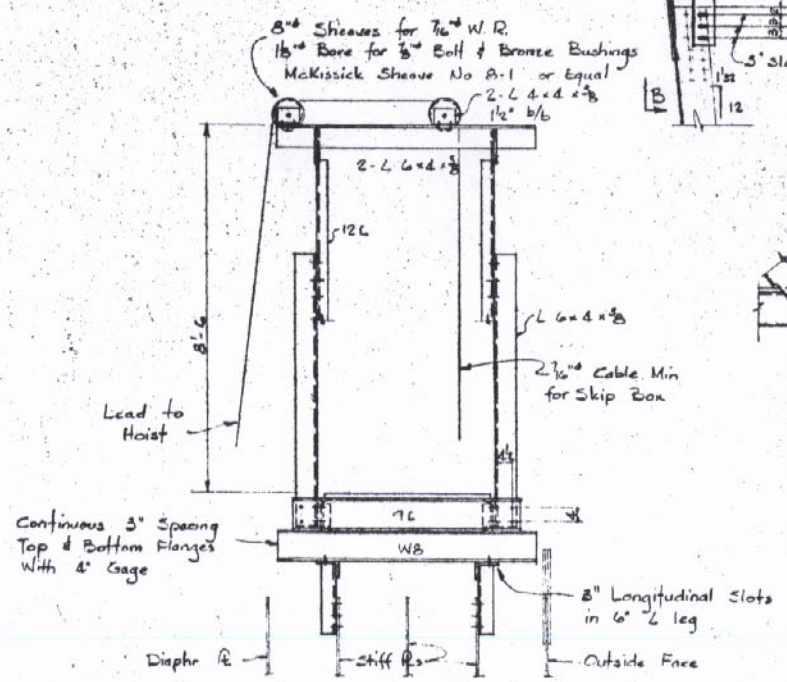

SECTION B-B

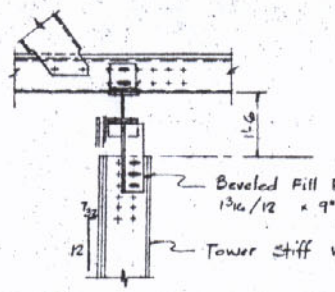

BRACKET DETAIL AT S7, S8

APPROVED
FOR SIZE OF MATERIAL AND STRENGTH OF CONNECTIONS
BRIDGE DESIGN SECTION
LOUIS A. GARRIDO BRIDGE DESIGN ENGINEER
By REB Date Oct 2 1979

NOTES

Structural Material - A36
Open Holes - 15/16" for 7/8" H.T. Bolts U.N.

APPROVED
For Design, Material & Workmanship

Frankland & Lienhard
By E.S. 8-7-79

FRANKLAND & LIENHARD
CONSULTING ENGINEERS

Work Dwgs 2, 3, 4, 5 Together

TOWER BOLTING

REVISIONS	DATE
For Review	6/1/79

TOP PLATFORM & DETAILS
LOUISIANA DOT PROJECT # 450-37-02
ST CHARLES PARISH LULING, LA

THE MELBOURNE BROS. CONSTRUCTION CO.
NORTH CANTON OHIO

JOB NO DATE

SHEET NO 3 OF

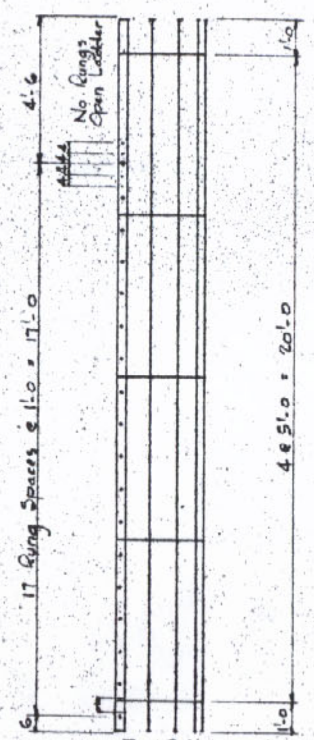

LADDER L22
4 Req'd

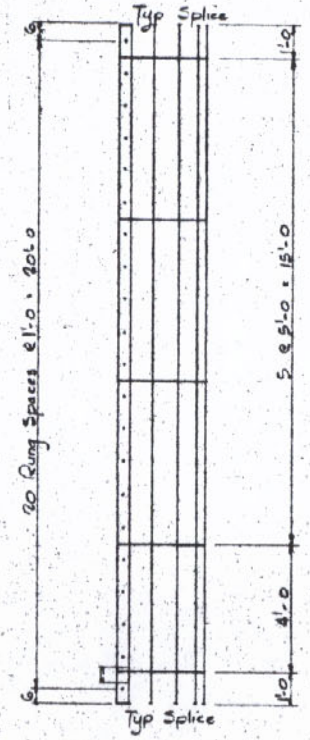

LADDER L21
4 Req'd

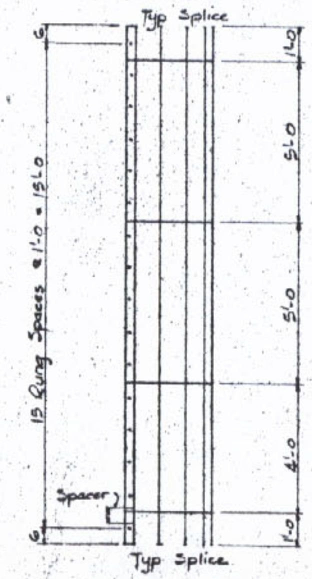

LADDER L16
4 Req'd

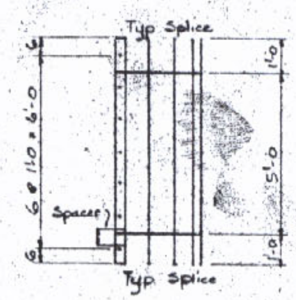

LADDER L7
4 Req'd

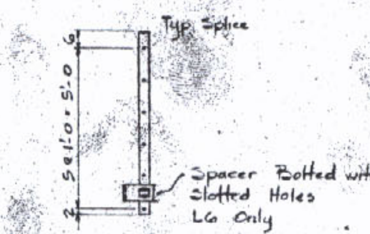

LADDER L6
4 Req'd

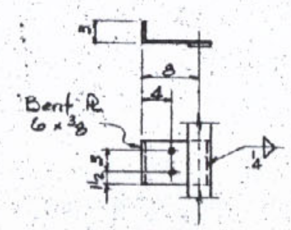

LADDER SPACER

LADDER REQUIREMENTS

TOWER SECTION	LADDER LENGTH	LADDER SECTIONS
T1	None	None
T2	None	None
T3	56'	L22, L21, L7, L6
T4	65'	L22, L21, L16, L6
T5	65'	L22, L21, L16, L6
T6	65'	L22, L21, L16, L6
T7	49'	L22, L21, L6
T8	28'	L22, L6
T9	28'	L22, L6

LADDER MATERIAL

Sides - 3 x 1/2
Rungs - 7/8"⌀
Cage Hoops - 3 x 3/8
Cage Bars - (7) - 2 1/2 x 3/8
Splice Plates
Sides - 3 x 3/8 x 0'-10 1/2
Cage Bars - 2 1/2 x 5/16 x 0'-10 1/2

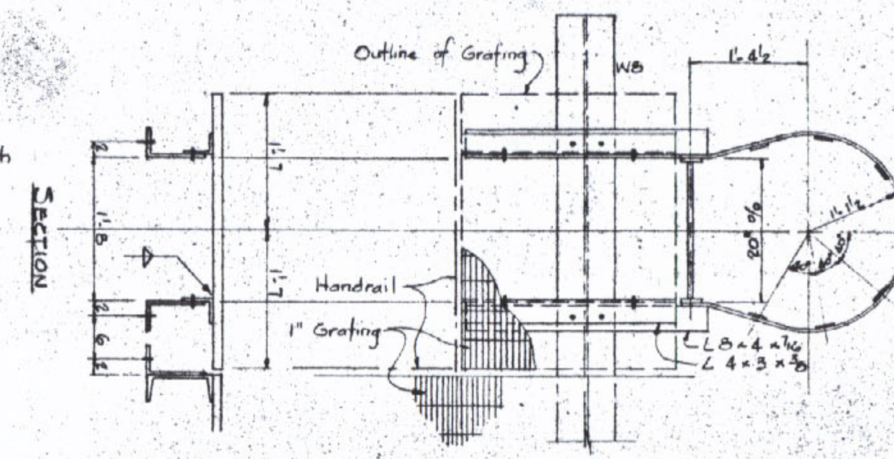

PLAN AT LADDER TOP - ACCESS PLATFORM
1" = 1'-0

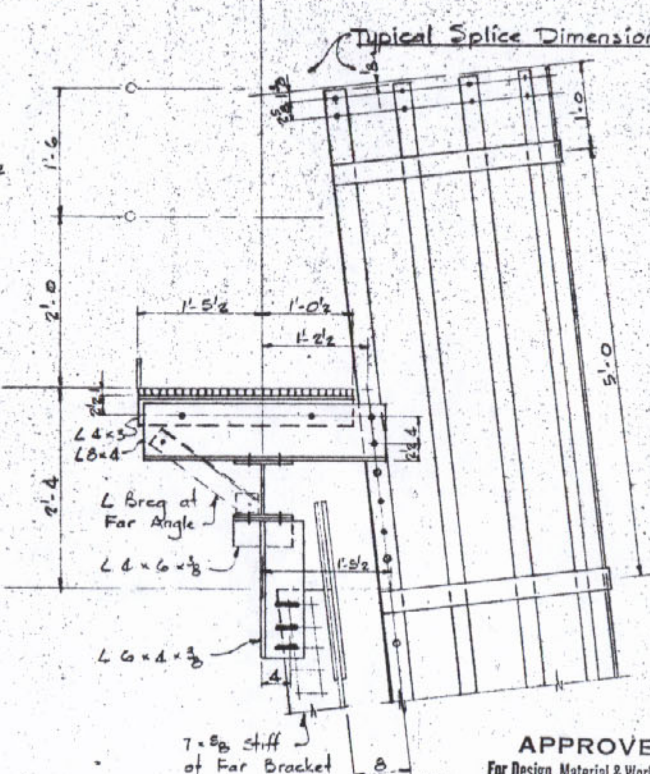

ELEVATION

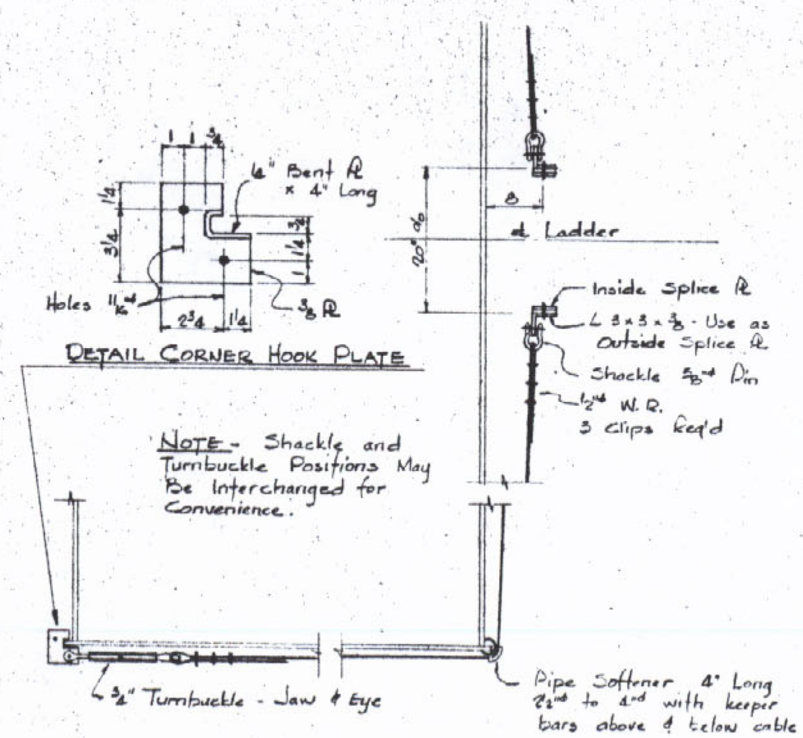

DETAIL CORNER HOOK PLATE

NOTE - Shackle and Turnbuckle Positions May Be Interchanged for Convenience.

PART PLAN AT LADDER CABLES

APPROVED
FOR SIZE OF MATERIAL AND STRENGTH OF CONNECTIONS
BRIDGE DESIGN SECTION
LOUIS ... BRIDGE DESIGN ENGINEER
By ... Date AUG 8 1979

APPROVED
For Design, Material & Workmanship
Frankland & Lienhard
By E.S. 8-7-79
FRANKLAND & LIENHARD
CONSULTING ENGINEERS

REVISIONS	DATE
For Review	6/1/79

TOWER BOLTING
LADDER & PLATFORM DETAILS
LOUISIANA DOT PROJECT # 450-37-02
ST CHARLES PARISH LULING, LA
THE MELBOURNE BROS. CONSTRUCTION CO.
NORTH CANTON OHIO
SHEET NO 4
JOB NO ... DATE ...

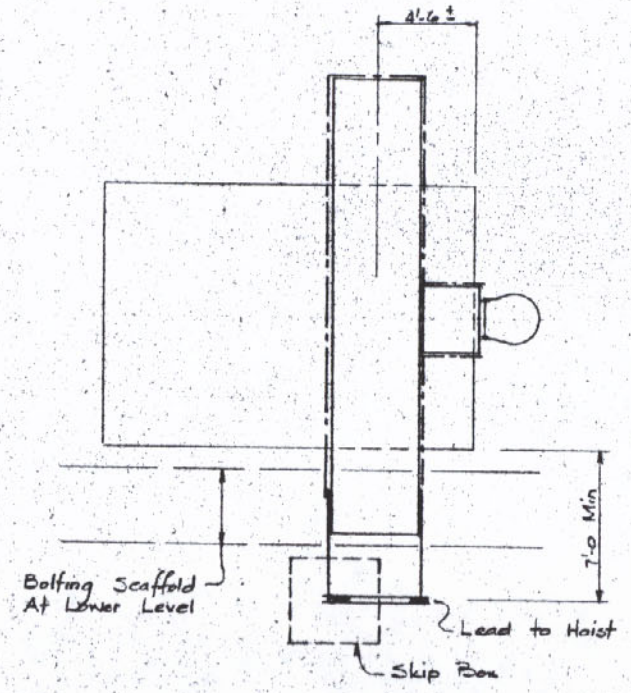

PLAN OF TOP PLATFORM AT T9

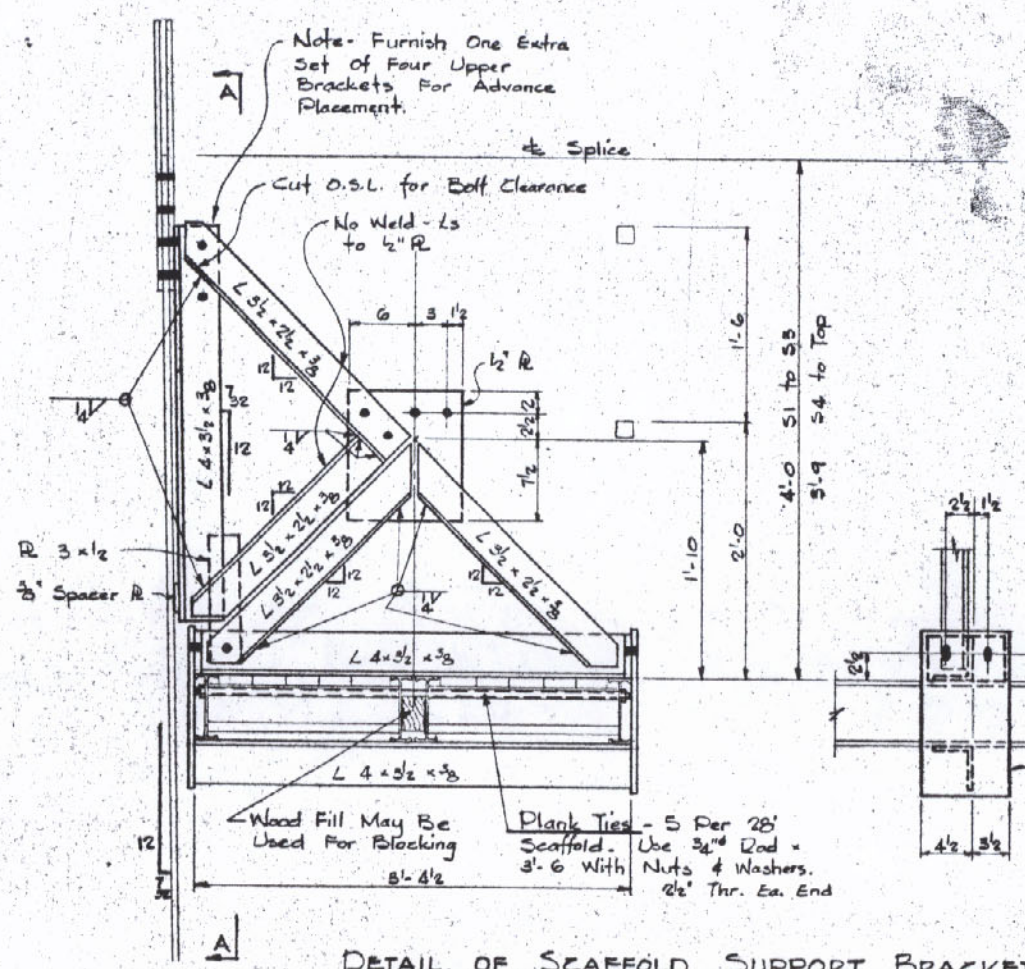

DETAIL OF SCAFFOLD SUPPORT BRACKETS
1½" = 1'-0

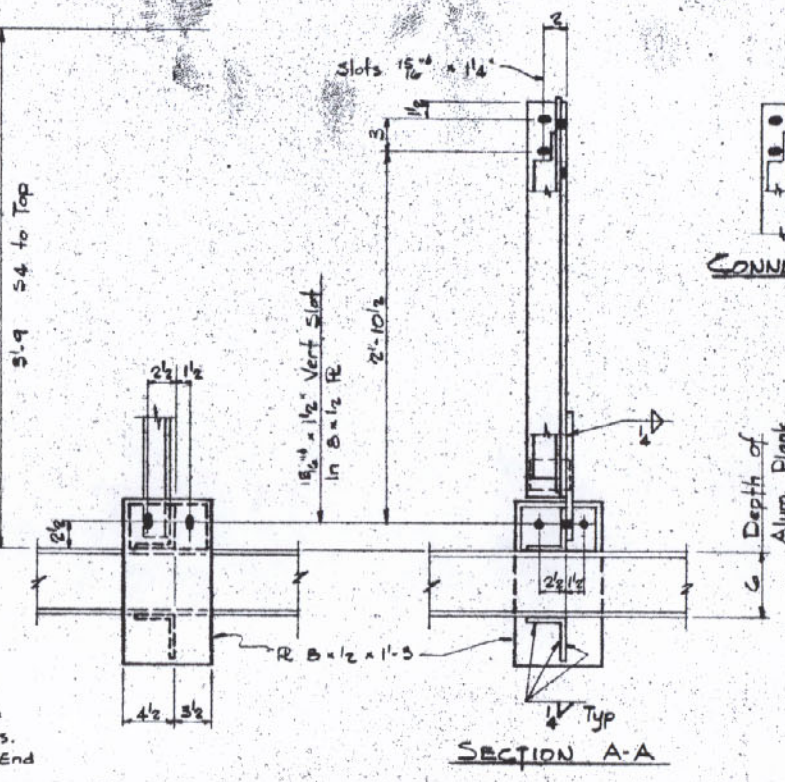

SECTION A-A

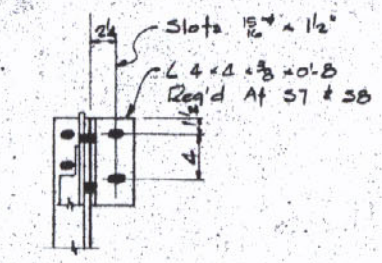

CONNECTION TO TOWER AT S7 & S8

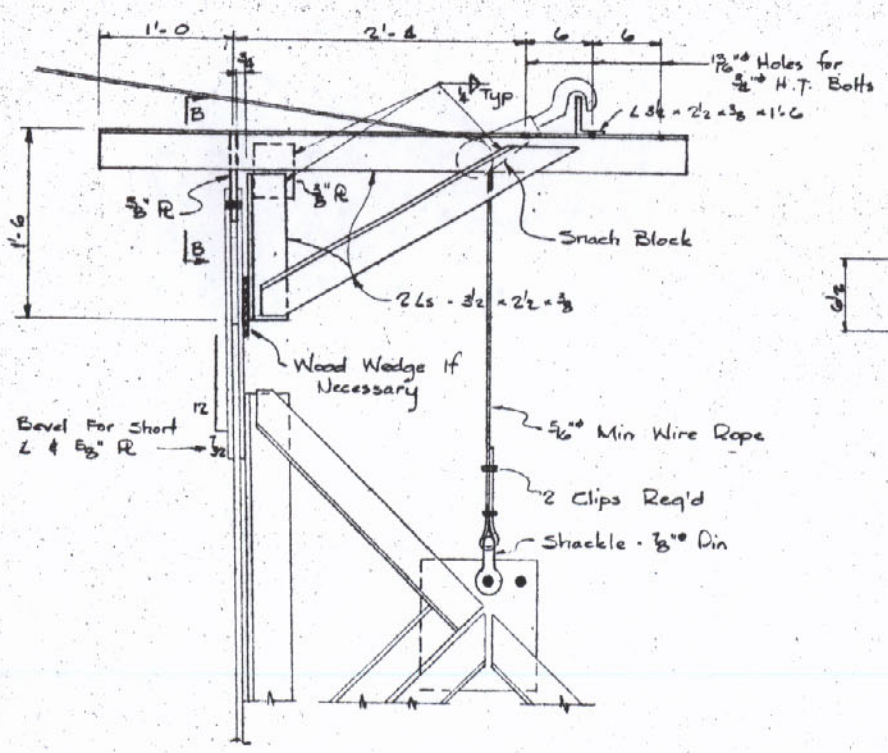

DETAIL AT SCAFFOLD HOISTING BRACKETS
8 REQ'D 1½" = 1'-0

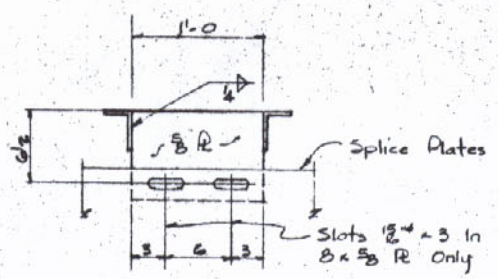

SECTION B-B

NOTES

Material - A36
Open Holes - 15/16"ø U.N.
Aluminum Scaffold Plank To Be 20" Wide × 28' Long With A 750# Or 3-Man Rating.

APPROVED
For Design, Material & Workmanship

Frankland & Lienhard
By E.S. 8-7-79

FRANKLAND & LIENHARD
CONSULTING ENGINEERS

APPROVED
FOR SIZE OF MATERIAL AND STRENGTH OF CONNECTIONS
BRIDGE DESIGN SECTION
LOUISIANA DEPARTMENT OF HIGHWAYS BRIDGE DESIGN ENGINEER
By REB Date AUG 8 1979

Check Dwgs 2, 3, 4, 5 Together

TOWER BOLTING - LAYOUT AT T9 AND SCAFFOLD BRACKETS

LOUISIANA DOT PROJECT #450-37-02
ST CHARLES PARISH LULING, LA

THE MELBOURNE BROS. CONSTRUCTION CO.
NORTH CANTON OHIO

SHEET NO 5

REVISIONS	DATE
For Review	6/1/79

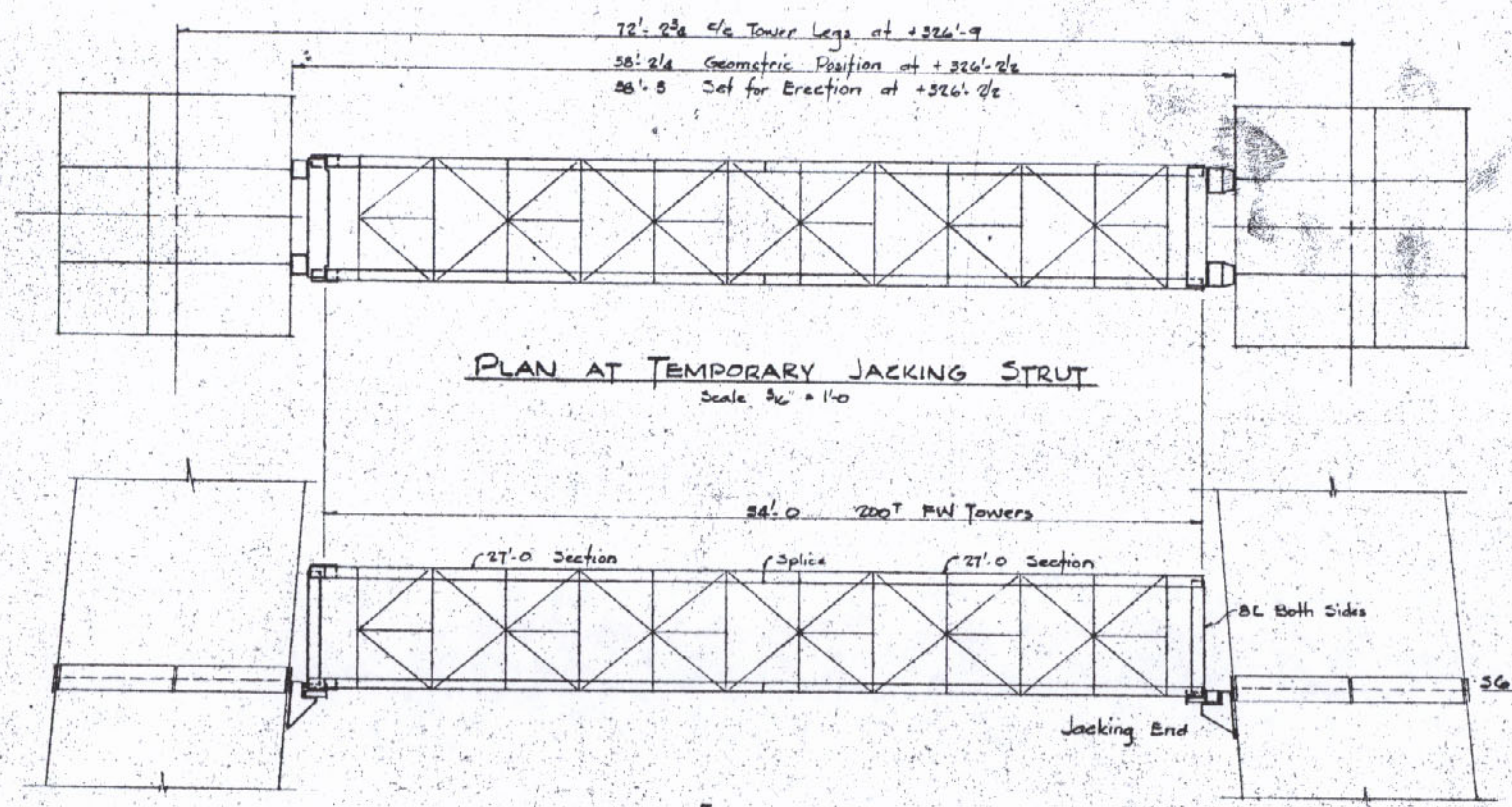

PLAN AT TEMPORARY JACKING STRUT
Scale 3/16" = 1'-0

ELEVATION

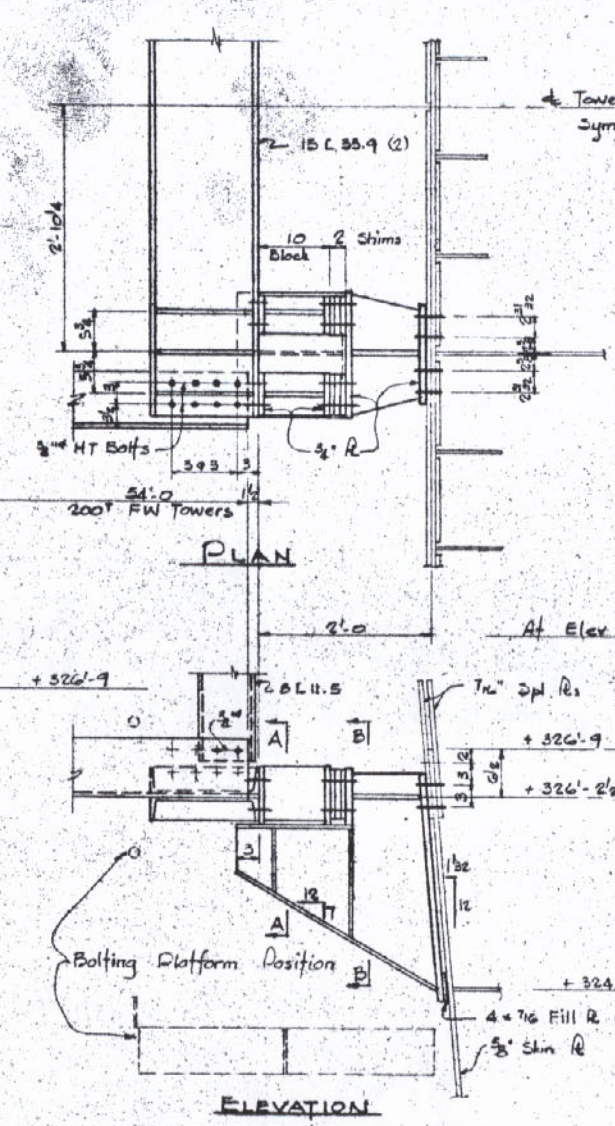

ELEVATION
DETAIL AT JACKING END
Scale 1" = 1'-0

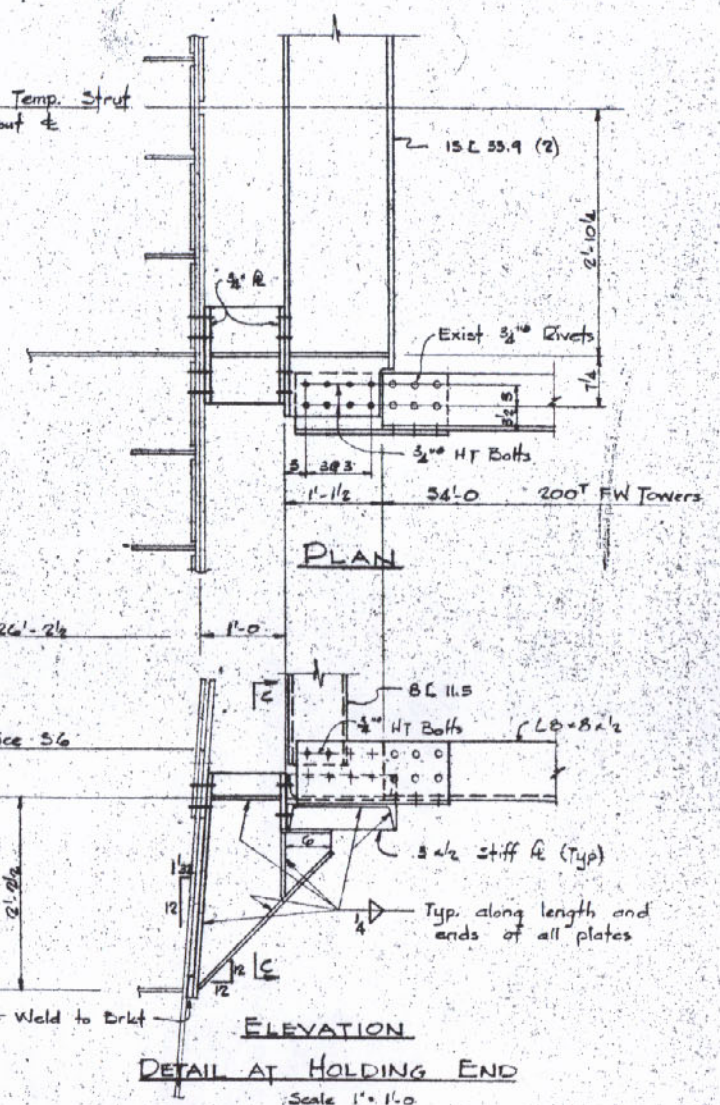

ELEVATION
DETAIL AT HOLDING END
Scale 1" = 1'-0

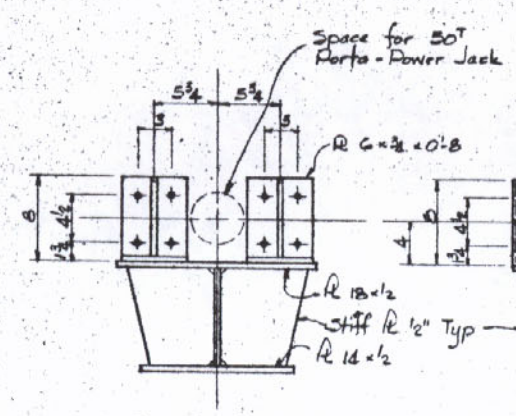

SECTION A-A
1/2" = 1'-0

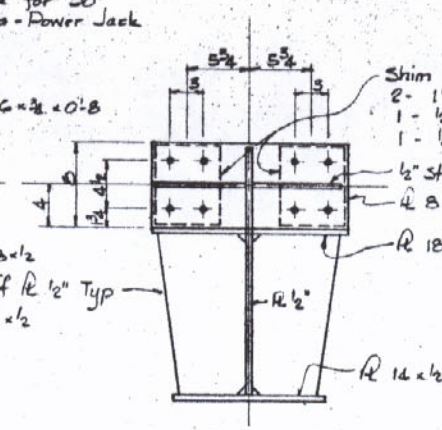

SECTION B-B
1/2" = 1'-0

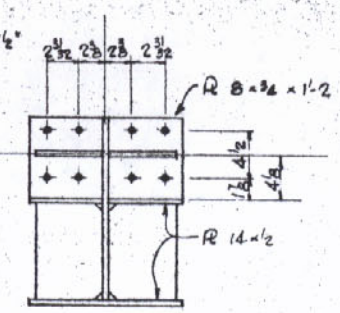

SECTION C-C
1/2" = 1'-0

APPROVED
FOR SIZE OF MATERIAL AND STRENGTH OF CONNECTIONS
BRIDGE DESIGN SECTION
LOUIS A. GARRIDO BRIDGE DESIGN ENGINEER
By RFB Date AUG 8 1979

APPROVED
For Design, Material & Workmanship
Frankland & Lienhard
By E.S. 8-7-79
FRANKLAND & LIENHARD
CONSULTING ENGINEERS

NOTES

Material - A36
Open Holes - 15/16" ϕ for 7/8" ϕ HT Bolts, U.N.
Bracket Plates - 1/2" U.N.
Ref. Drawing for 200 Ton FW Tower
Allied Structural Steel # FW-203
Detail of 27'-0 Section
The 10" Blocks at the Jacking End of the struts should be bolted to the 15" L's prior to erection.
Strut and Brackets shown are for one tower only. Struts and Brackets are required for both Towers at the same time.
Jacking will be required at the time the strut is erected and when closure is made with Tower Section T10.

For Review 6/1/79	DATE	TEMPORARY TOWER STRUT
	REVISIONS	LOUISIANA DOT PROJECT #450-57-02
		ST CHARLES PARISH LULING, LA
		THE MELBOURNE BROS. CONSTRUCTION CO. NORTH CANTON OHIO
		SHEET NO 6

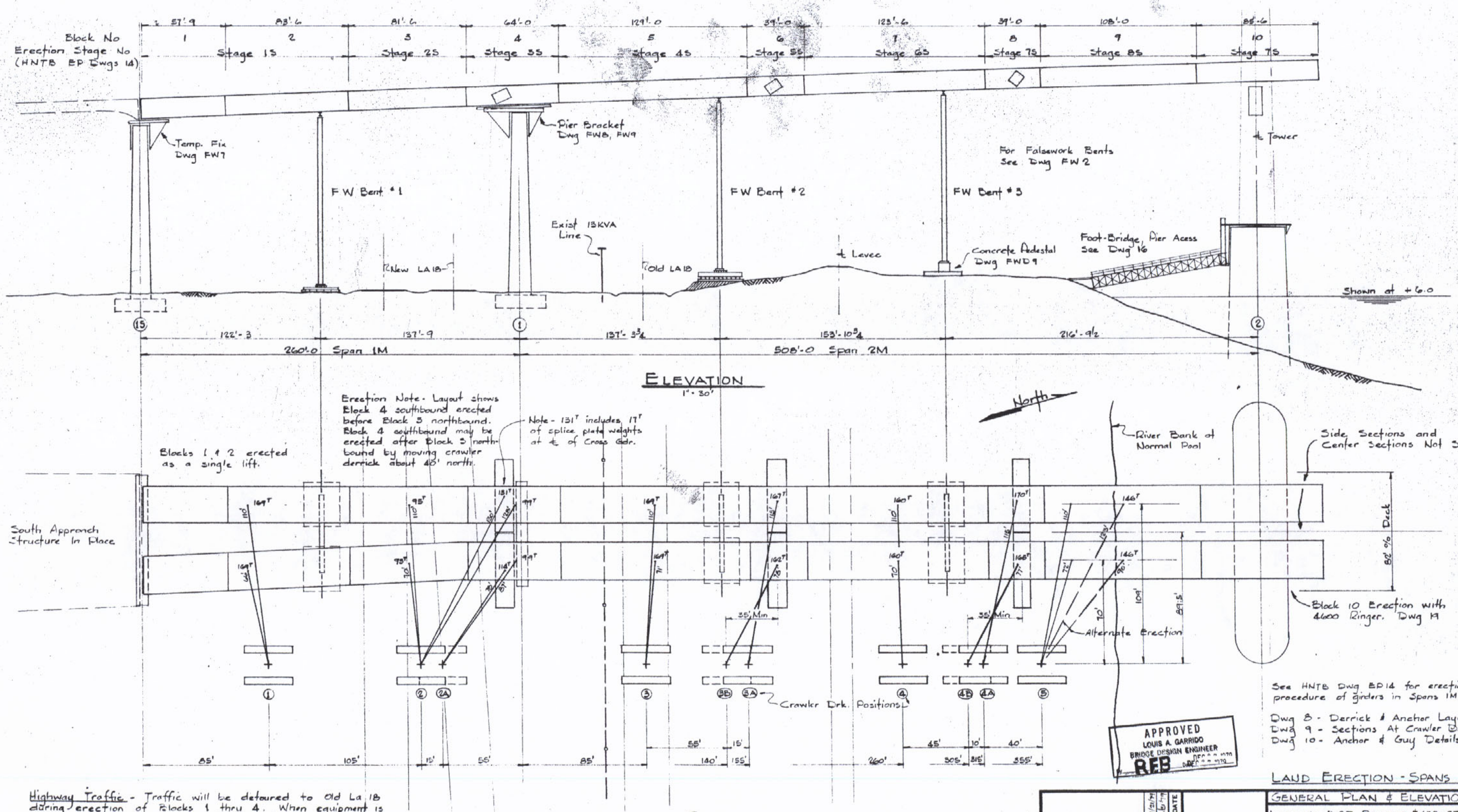

See HNTB Dwg EP14 for erection procedure of girders in Spans 1M & 2M.

Dwg 8 - Derrick & Anchor Layout
Dwg 9 - Sections At Crawler Derrick
Dwg 10 - Anchor & Guy Details

LAND ERECTION - SPANS 1 & 2

Highway Traffic - Traffic will be detoured to Old La 18 during erection of Blocks 1 thru 4. When equipment is being moved to Span 2M, traffic will be re-routed to New La 18.

13KVA Power Line - Will be re-routed to Span 1M area when erection starts in Span 2M.

Ref Stage Nos	11/21/78	
For Review	8/1/78	
REVISIONS	DATE	

GENERAL PLAN & ELEVATION

LOUISIANA D.O.T. PROJECT #450-37-02

ST CHARLES PARISH LULING, LA

THE MELBOURNE BROS. CONSTRUCTION CO.

NORTH CANTON OHIO

JOB NO. 1429 DATE 11-16-78

SHEET NO. 7 OF

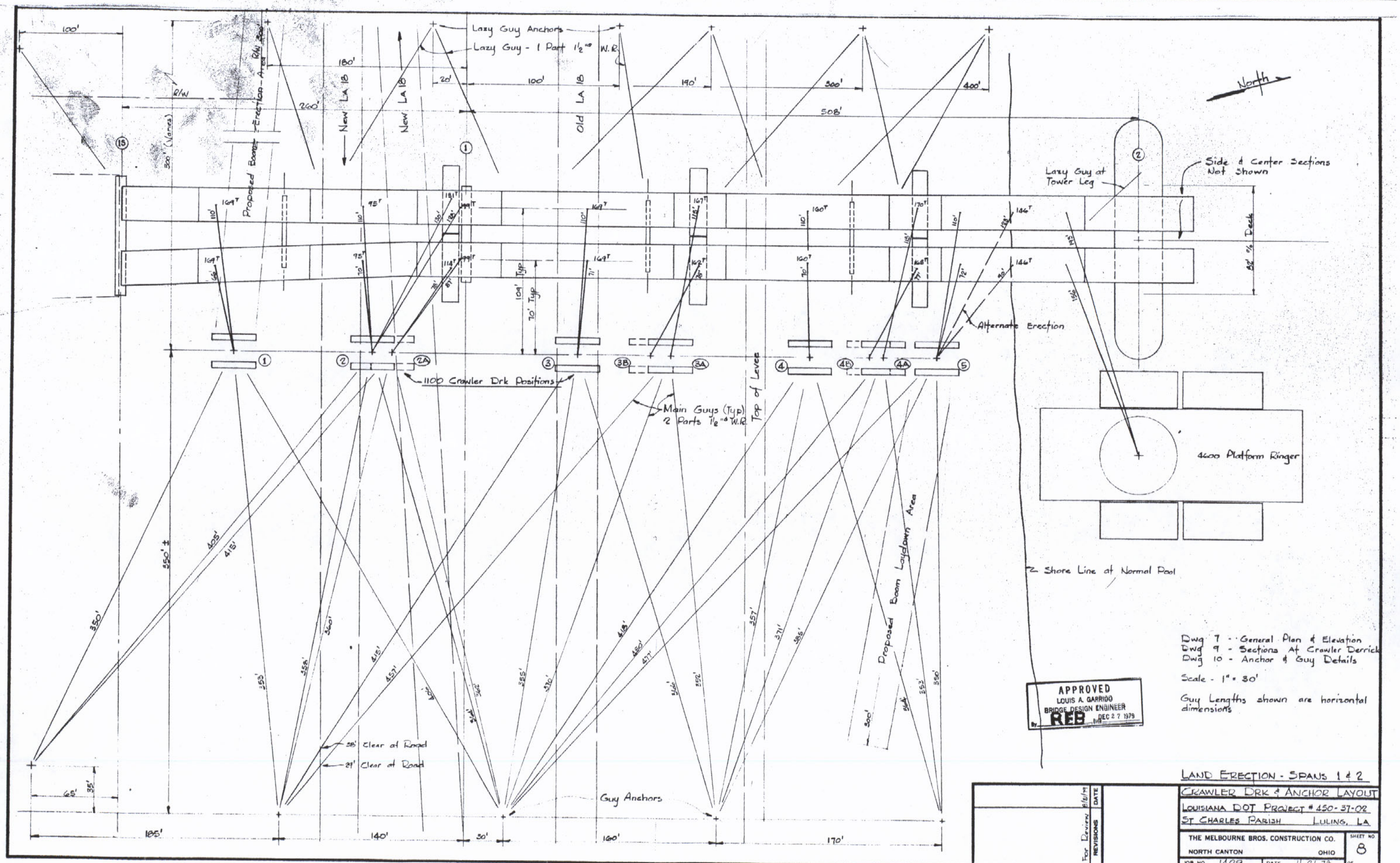

Dwg 7 - General Plan & Elevation
Dwg 9 - Sections At Crawler Derrick
Dwg 10 - Anchor & Guy Details

Scale - 1" = 30'

Guy Lengths shown are horizontal dimensions

APPROVED
LOUIS A. GARRIDO
BRIDGE DESIGN ENGINEER
By REB DEC 27 1979

LAND ERECTION - SPANS 1 & 2

For Review 8/8/79	DATE	CRAWLER DRK & ANCHOR LAYOUT
	REVISIONS	LOUISIANA DOT PROJECT # 450-37-02
		ST CHARLES PARISH LULING, LA
		THE MELBOURNE BROS. CONSTRUCTION CO. NORTH CANTON OHIO
		JOB NO. 1429 DATE 11-21-79
		SHEET NO 8 OF

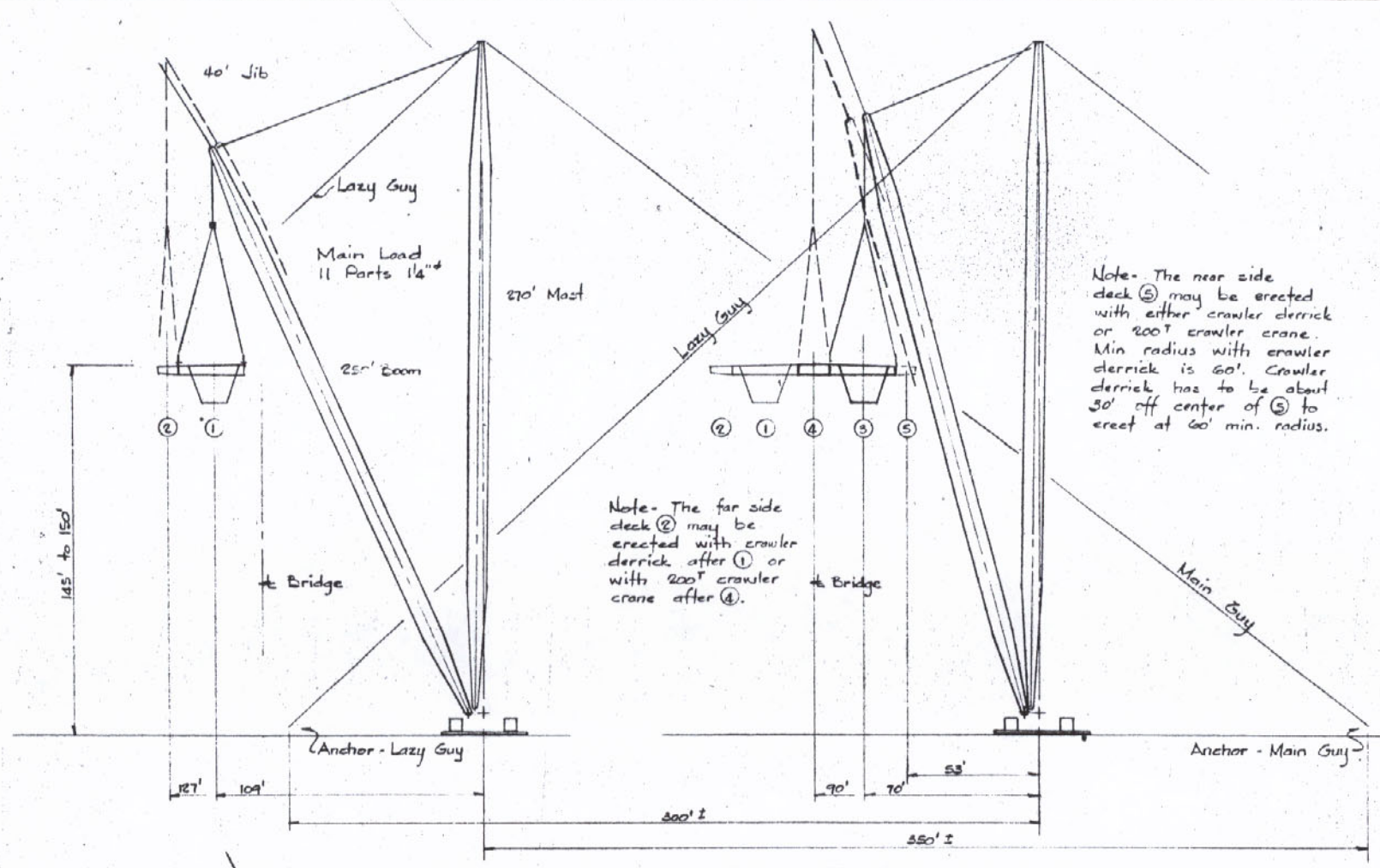

Note- The near side deck ⑤ may be erected with either crawler derrick or 200T crawler crane. Min radius with crawler derrick is 60'. Crawler derrick has to be about 30' off center of ⑤ to erect at 60' min. radius.

Note- The far side deck ② may be erected with crawler derrick after ① or with 200T crawler crane after ④.

SECTIONS AT CRAWLER DERRICK 11310 - TYPICAL DECK ERECTION
1" = 30'

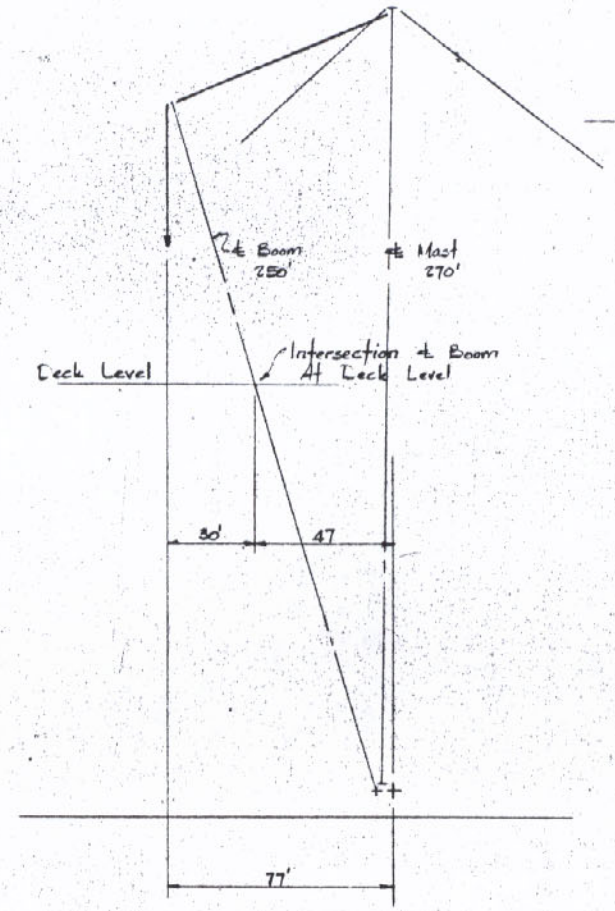

SECTION A-A
1" = 30'

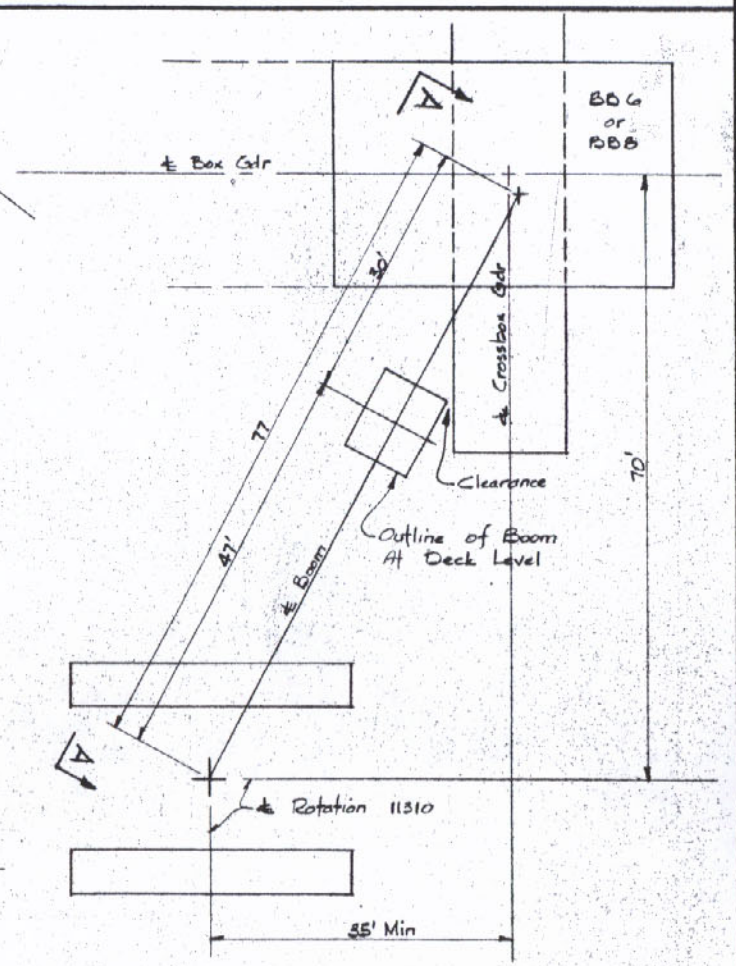

PLAN AT DERRICK POSITION 3B OR 4B
1" = 10'

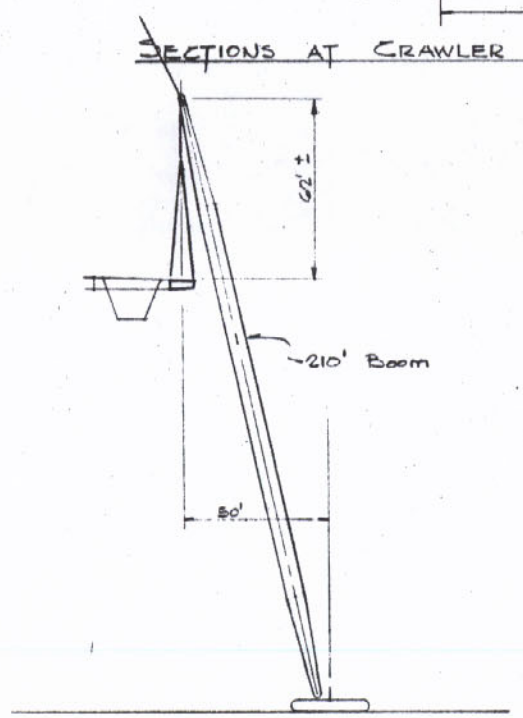

SECTION AT 200 TON CRANE

Dwg 7 - General Plan & Elevation
Dwg 8 - Derrick & Anchor Layout
Dwg 10 - Anchor & Guy Details

APPROVED
LOUIS A. GARRIDO
BRIDGE DESIGN ENGINEER
By RFB Date DEC 27 1979

LAND ERECTION - SPANS 1 & 2

For County	8/6/79	DATE
REVISIONS		

SECTIONS AT CRAWLER DERRICK
LOUISIANA DOT PROJECT # 450-37-02
ST CHARLES PARISH LULING, LA.

THE MELBOURNE BROS. CONSTRUCTION CO.
NORTH CANTON OHIO

JOB NO. 1429 DATE 12-1-73

SHEET NO. 9 OF

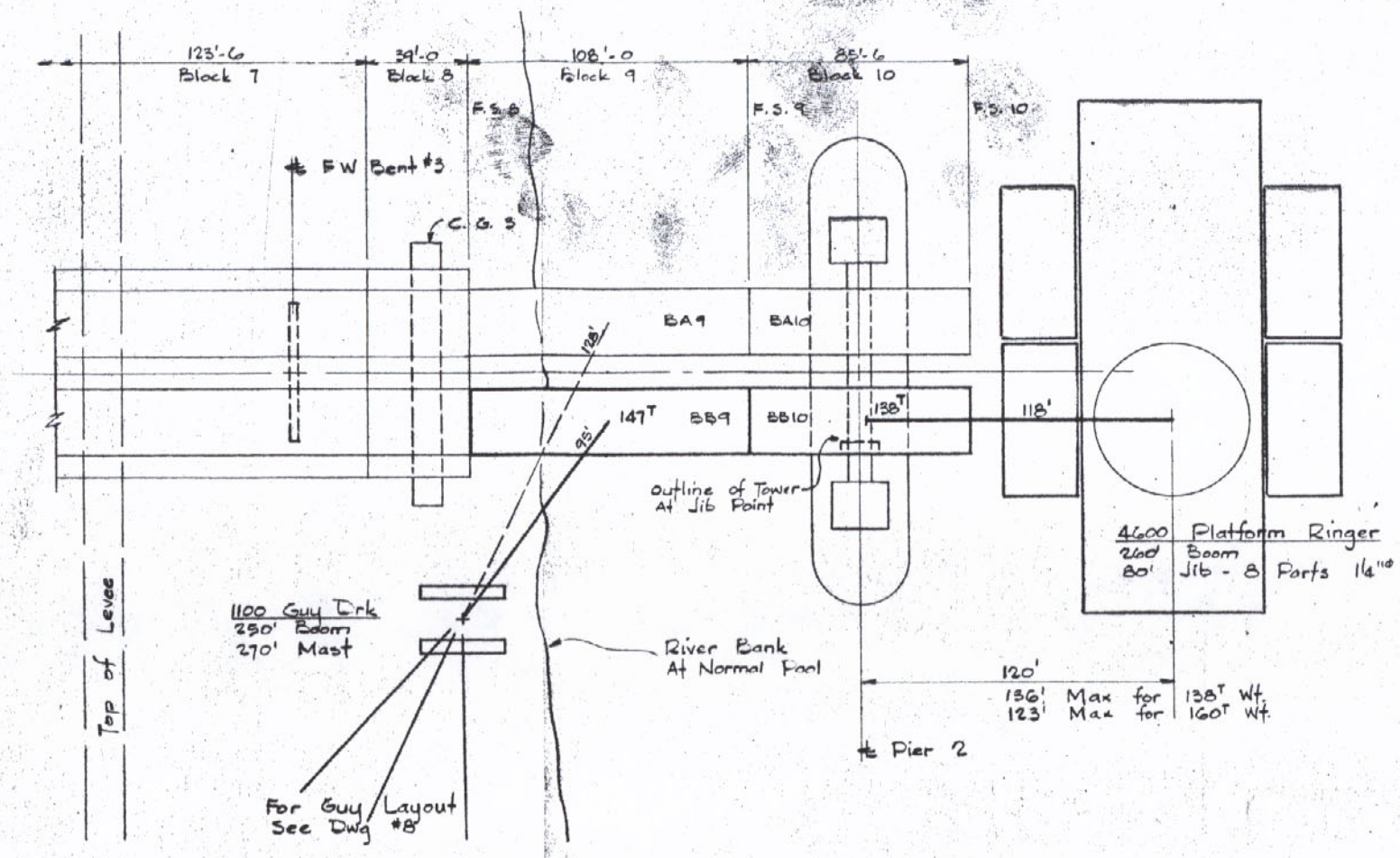

PLAN AT ALTERNATE ERECTION OF GIRDER BLOCKS 9 AND 10

1" = 30'

For information not shown for the erection of Block 9 see dwgs. 7, 8 & 9.

For information not shown for the erection of Block 10 see dwg 19.

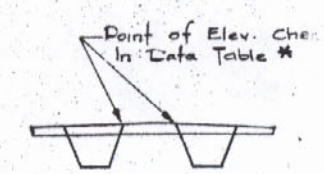

TYPICAL GIRDER SECTION

PROCEDURE

Girders BA9 and BA 10 will be erected simultaneously, and Girders BB9 and BB 10 will be erected simultaneously. The following items are necessary for this operation.

1. The permanent fix brackets for the bearings at Pier 2 will have to be loose to allow for erection clearance.
2. Adjust the temporary fix at Pier 13 to allow for proper distance between Block 8 and Pier 2 bearings. The distance will also have to allow for the estimated erection temperature. The temporary fix will remain blocked until the bearings at Pier 2 are fixed.
3. Lift Girder 9 and hold in erected position while splice 8 is initially pinned. Continue holding with Crawler Drk.
4. Lift Girder 10 and hold in erected position while splice 9 is initially pinned. Continue holding with Platform Ringer.
5. Hold both girders until splices 8 and 9 are sufficiently pinned.
6. Release both cranes slowly at the same time until seated on Pier 2 bearings.
7. After both roadways are erected, adjust longitudinally for permanent fix at Pier 2. Release temporary fix at Pier 13 and fix bearings at Pier 2.

Strongbacks at splice 8 are not required. Temporary stays T9 and T10. at splices 9 and 10 are not required.

ERECTION DATA FOR ALTERNATE PROCEDURE

Description	Erect Blocks 9 & 10		Cantilever Block 11	
	Alternate Procedure	Original Procedure	Alternate Procedure	Original Procedure
F.W. Bent #3 Load	1283 K/Gdr	1206 K/Gdr	936 K/Gdr	927 K/Gdr
Pier 2 Load	447 K/Gdr	164 K/Gdr	1104 K/Gdr	918 K/Gdr
Rotation Pier 2 Brgs	-.06°	-.07°	-.27°	-.24°
Gdr Elev at CG3	*164.64	*164.62	*164.70	*164.68
" " FS 8	165.02	165.00	165.08	164.96
" " FS 9	167.82	167.83	167.92	167.91
" " FS 10	169.92	169.92	169.71	169.72
" " FS 11	—	—	171.40	171.48
F.W. Bent #2 Load	244 K/Gdr	310 K/Gdr	373 K/Gdr	420 K/Gdr

NOTES

Data in table above furnished by HNTB.
Stresses in girders during alternate erection procedure are well below allowables per HNTB.

ALTERNATE ERECTION

Complete Data in Table	7/6/80	DATE
REVISIONS		

GIRDERS 9 AND 10

LOUISIANA DOT PROJECT #450-37-02

ST CHARLES PARISH LULING, LA

THE MELBOURNE BROS. CONSTRUCTION CO.
NORTH CANTON OHIO

JOB NO. 429 DATE 7-11-1980

SHEET NO 9A OF

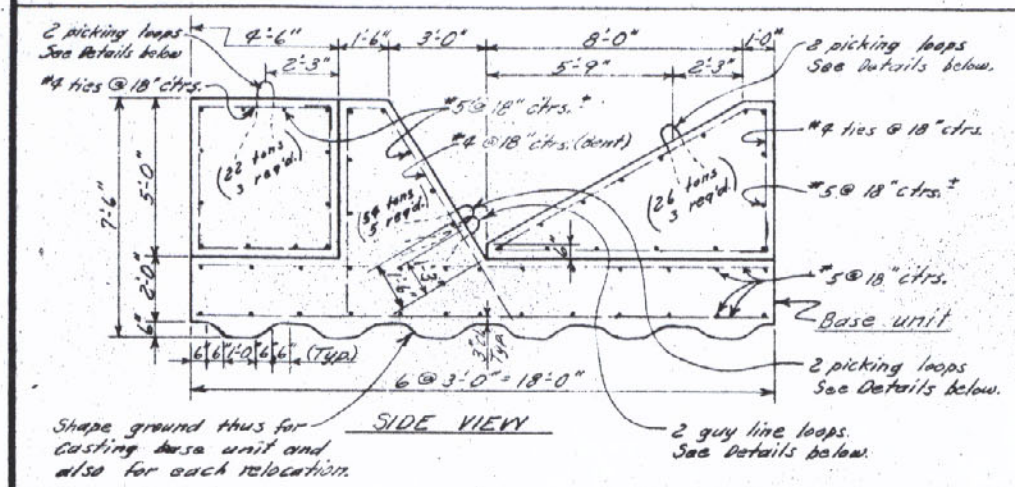

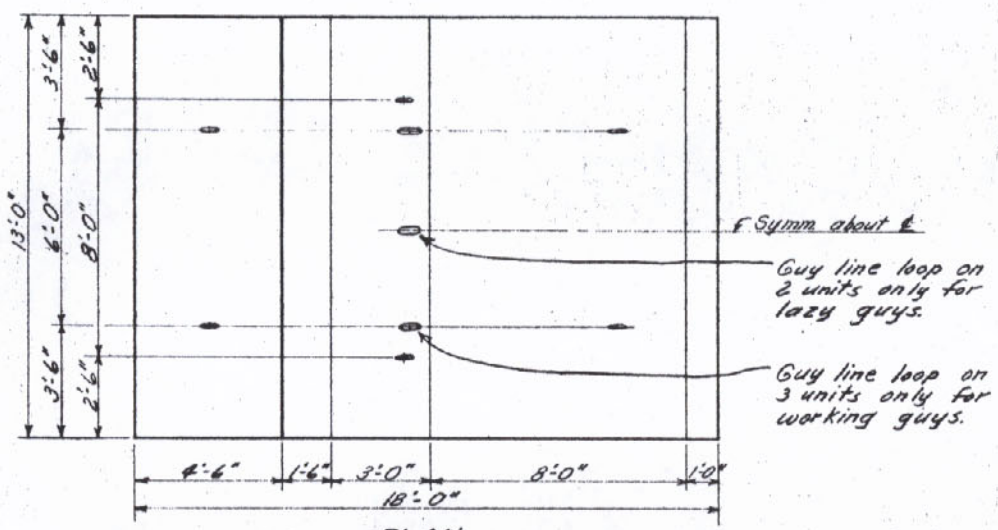

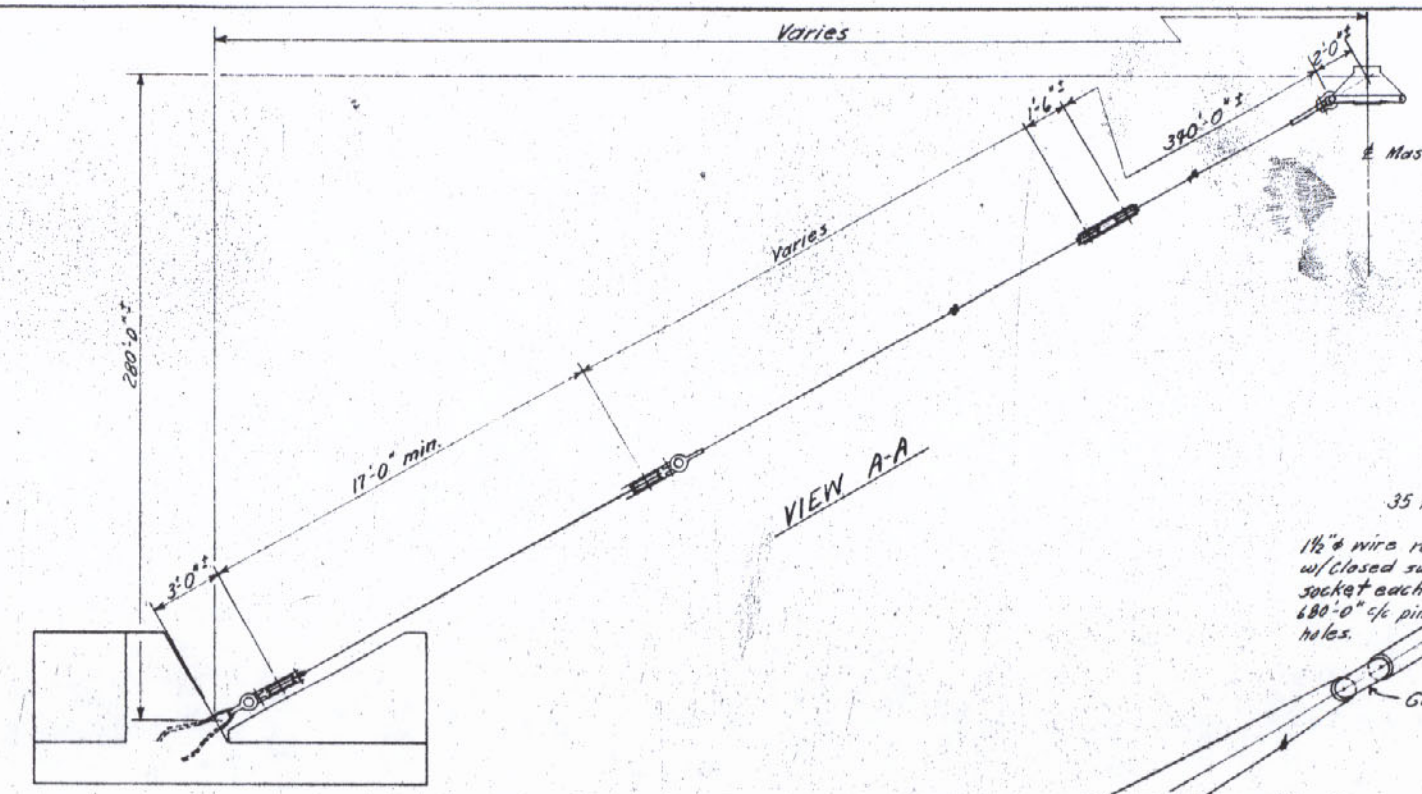

NOTES

1) All wire rope to be EIPS, IWRC, 6x19 class.
   1½"ϕ - 114 ton breaking strength
   ⅞"ϕ - 39.8 "
2) All wire rope clips to be Fist-grips.

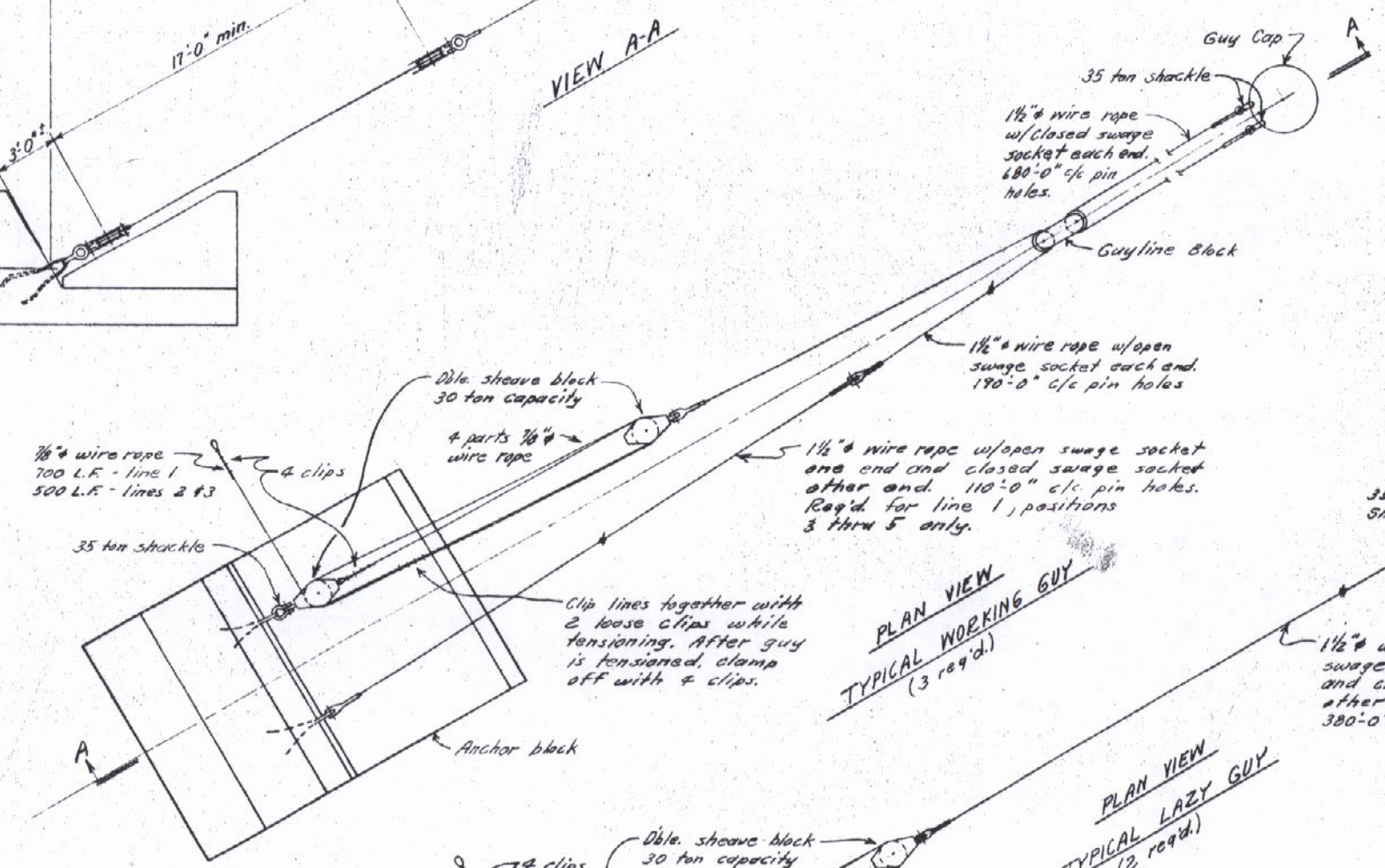

APPROVED
LOUIS A. GARRIDO
BRIDGE DESIGN ENGINEER
By RFB Date DEC 27 1979

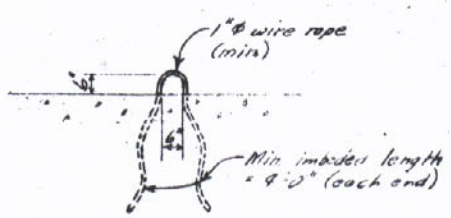

TYPICAL PICKING LOOP

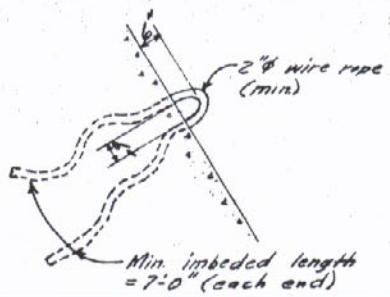

TYPICAL GUY LINE LOOP

ANCHOR DETAILS

LAND ERECTION - SPANS 1 & 2

For Erection	DATE	REVISIONS
	8/21/79	

CRAWLER DRK. ANCHOR & GUY DETAILS
LOUISIANA DOT PROJECT #450-37-02
ST. CHARLES PARISH LULING, LA.

THE MELBOURNE BROS. CONSTRUCTION CO.
NORTH CANTON OHIO

JOB NO. 1427 DATE 7-17-79

SHEET NO. 10 OF

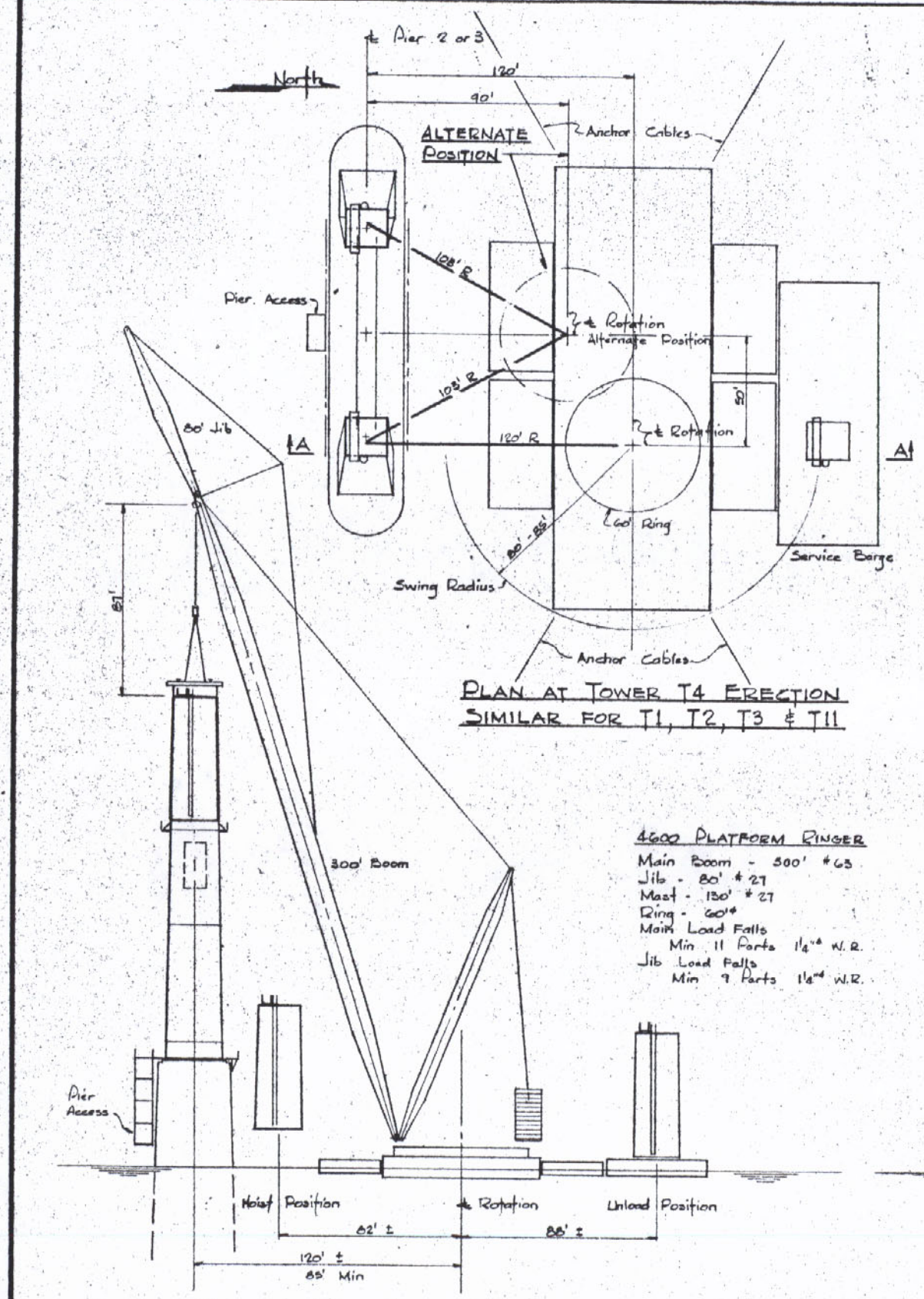

PLAN AT TOWER T4 ERECTION
SIMILAR FOR T1, T2, T3 & T11

4600 PLATFORM RINGER
Main Boom - 300' #63
Jib - 80' #27
Mast - 130' #27
Ring - 60'φ
Main Load Falls
Min 11 Parts 1¼"φ W.R.
Jib Load Falls
Min 9 Parts 1⅛"φ W.R.

SECTION A-A TOWER T1 - T4

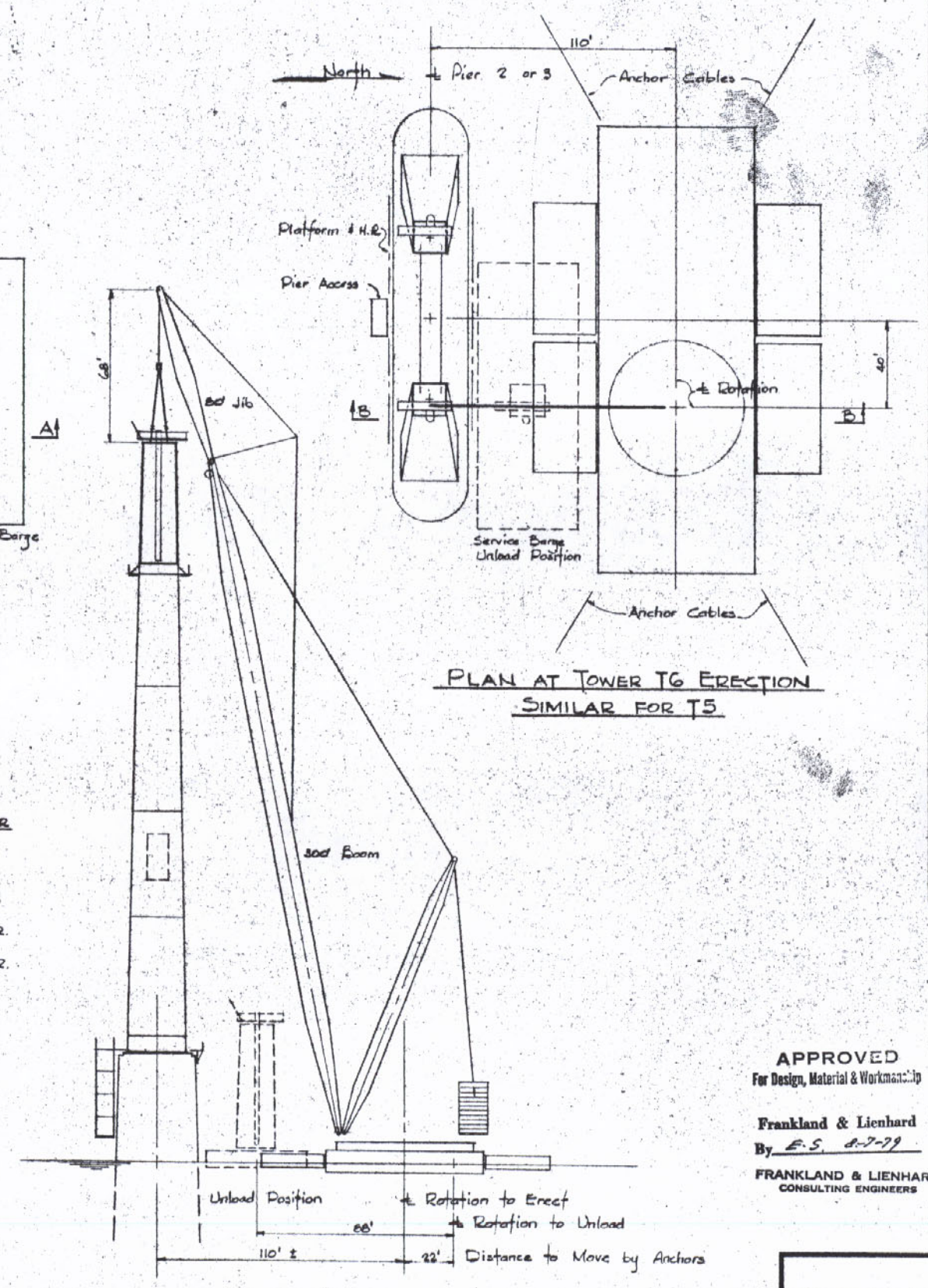

PLAN AT TOWER T6 ERECTION
SIMILAR FOR T5

SECTION B-B TOWER T5 & T6

ERECTION WEIGHTS

	T1	T2	T3	T11	T4	T5	T6
Wt. Main Piece	227*	328*	300*	302*	245*	211*	200*
Wt. Splice Plates	20	17	11	29	11	11	12
Erection Rigging	17	17	17	4	17	17	9
Platform, Beams	–	4	4	–	4	4	4
Caged Ladder	–	–	3	–	3	3	3
Erection Weight Kips	264	366	335	335	278	246	228
Erection Weight Tons	132	183	168	168	139	123	114
Max. Crane Radius	165'	140'	145'	145'	160'	185'	190'
Min. Crane Radius	80'	80'	80'	80'	80'	105'	105'

ERECTION RIGGING

	T1	T2	T3	T11	T4	T5	T6
Erection Lug 15A	4	4	4	–	4	–	–
" " 15B	–	–	–	–	–	2	2
" " 15G	–	–	–	–	–	2	–
" " 15H	–	–	–	–	–	–	2
" " 15L	–	–	–	2	–	–	–
Link Plate 25HH	–	8	8	–	–	4	4
" " 25H	8	–	–	–	8	4	4
Pins 25J	8	8	8	–	8	8	8
85T Shackle	4	4	4	–	4	4	4
Lift Lug 25E	8	*	8	–	8	8	8
Beam 25F	2	2	2	–	2	2	–
Beam 25G	2	2	2	–	2	2	2
Pendant 25D	4	**	4	4	4	4	4
Adaptor 25BB	–	–	–	–	–	2	2
Hook Plate 25AA	–	2	–	–	–	1	1
Hook Plate 25A	2	–	2	2	2	–	–

* Use 4 - 25EE above spreader beam,
4 - 25E below spreader beam.
** Use 4 Pendants 25CC

APPROVED
For Design, Material & Workmanship
Frankland & Lienhard
By E.S. 8-7-79
FRANKLAND & LIENHARD
CONSULTING ENGINEERS

NOTES
Do not swing with heavy loads on jib other than slight swing adjustment during erection.
See Dwg 12 for typical rigging layout.
See Dwg 13 for placement of rigging.
See Dwg 25 for rigging details.
See Dwg 15 for lift lug details.

APPROVED
FOR SIZE OF MATERIAL AND STRENGTH OF CONNECTIONS
BRIDGE DESIGN SECTION
LOUIS A. GARRIDO BRIDGE DESIGN ENGINEER
By ____ Date AUG 8 1979

Scale 1" = 30'-0"

TOWER ERECTION

For Review 6/1/79	SECTION T1 THRU T6 & T11	
REVISIONS / DATE	LOUISIANA DOT PROJECT # 450-37-02	
	ST CHARLES PARISH LULING, LA.	
	THE MELBOURNE BROS. CONSTRUCTION CO. NORTH CANTON OHIO	SHEET NO. 11

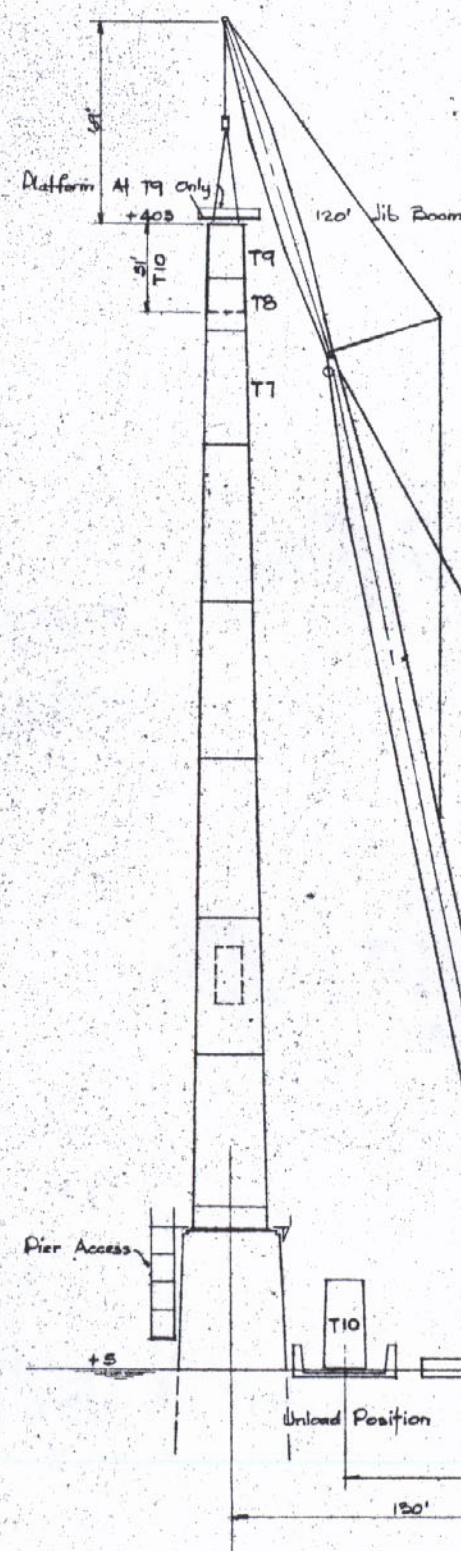

SECTION A-A TOWER T7 - T10

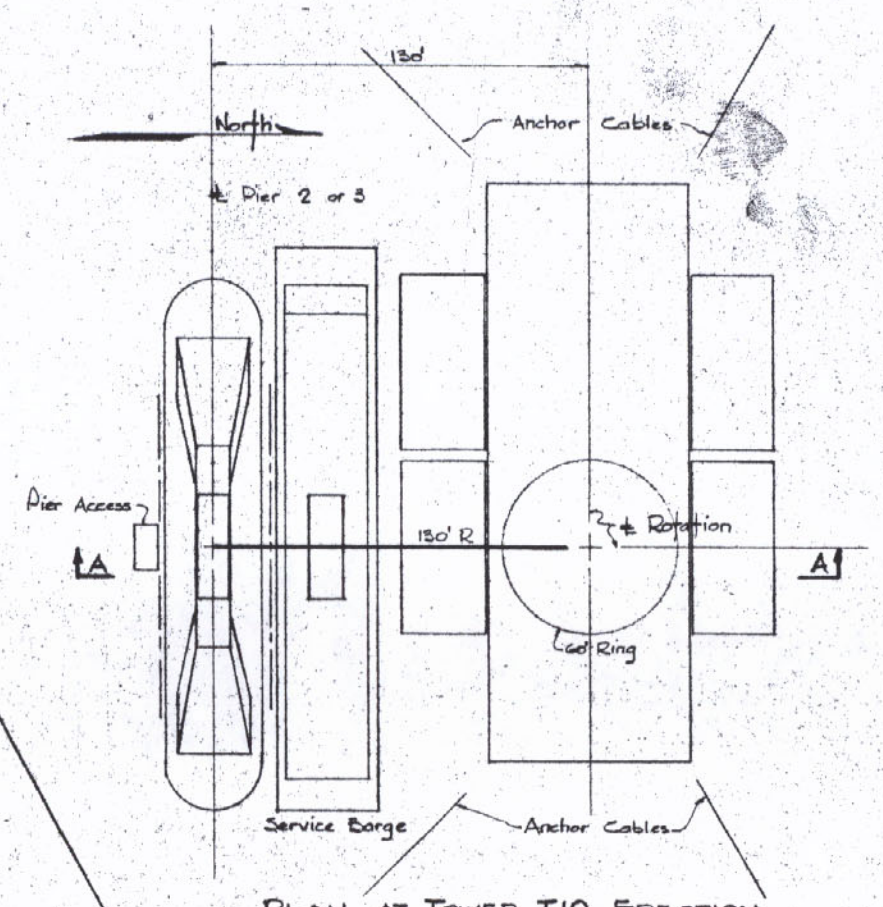

PLAN AT TOWER T10 ERECTION
SIMILAR FOR T7, T8 & T9

4600 PLATFORM RINGER

Main Boom - 540' #65
Jib Boom - 120' #27
Mast - 150' #27
Ring - 60'ϕ
Main Load Falls
Min 11 Parts 1¼"ϕ W. R.
Jib Load Falls
Min 7 Parts 1¼"ϕ W. R.

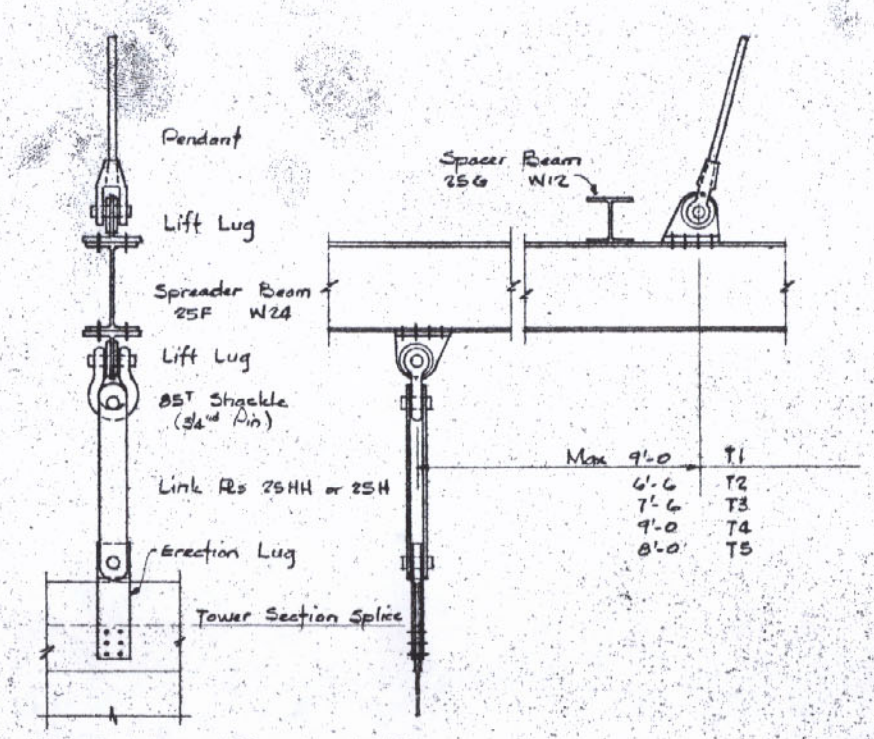

ERECTION RIGGING DETAIL
TYPICAL T1 - T5

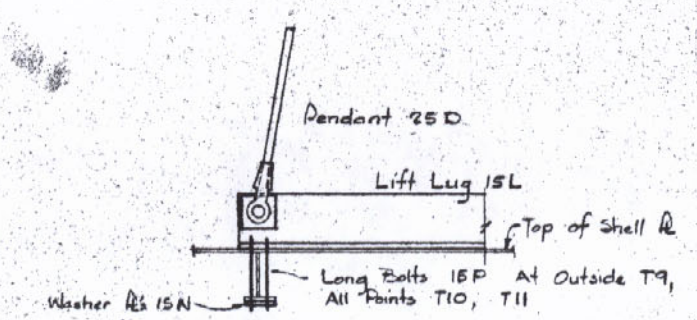

ERECTION RIGGING T10
T9 AND T11 SIMILAR

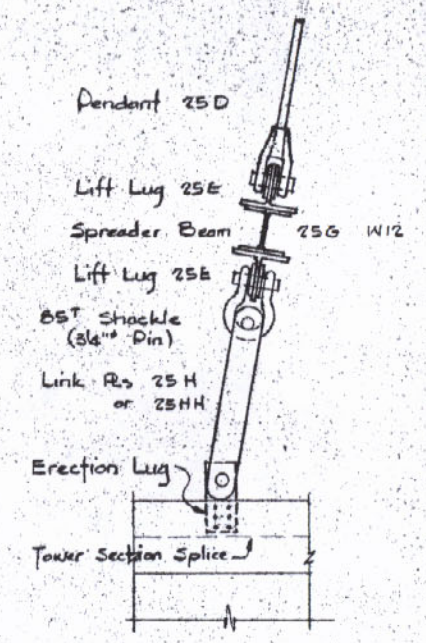

ERECTION RIGGING DETAIL
TYPICAL T6 - T8

ERECTION WEIGHTS

	T7	T8	T9	T10
Wt. Main Piece	146K	170K	150K	165K
Wt. Splice Plates	18	24	7	—
Erection Rigging	8	9	9	4
Platform, Beams	4	4	—	—
Caged Ladder	2	2	—	—
Erection Weight Kips	178	209	166	169
Erection Weight Tons	89	105	83	85
Max Crane Radius	180'	*120'	135'	135'
Min Crane Radius	125'	125'	125'	125'

ERECTION RIGGING

	T7	T8	T9	T10
Erection Lug 15C	2	2	—	—
Erection Lug 15J	2	—	—	—
Erection Lug 15K	—	2	—	—
Erection Lug 15L	—	—	2	2
Link Plate 25H	8	8	8	—
Pins 25J	8	8	8	—
85T Shackle	4	4	—	—
Lift Lug 25E	8	8	8	—
Beam 25G	2	2	2	—
Pendant 25D	4	4	4	4
Adapter 25BB	—	2	—	—
Adapter 25B	2	—	2	2
Hook Plate 25AA	—	1	—	—
Hook Plate 25A	1	—	1	1

* Boom Tip Sheave Point and Load Blocks to be removed and lowered during erection of T8's

NOTES

Do not swing with heavy jib loads.
See Dwg 13 for placement of rigging.
See Dwg 26 for rigging details.
See Dwg 15 for lift lug details.

APPROVED
For Design, Material & Workmanship

Frankland & Lienhard
By E.S. 8-7-79

FRANKLAND & LIENHARD
CONSULTING ENGINEERS

APPROVED
FOR SIZE OF MATERIAL AND STRENGTH OF CONNECTIONS
BRIDGE DESIGN SECTION
LOUIS A. CARRIDO BRIDGE DESIGN ENGINEER
By REB Date AUG 8 1979

Scale 1" = 30' & ½" = 1'-0

TOWER ERECTION

For Review	8/79	DATE
		REVISIONS

SECTION T7 THRU T10
LOUISIANA DOT PROJECT #450-57-02
ST CHARLES PARISH LULING, LA

THE MELBOURNE BROS. CONSTRUCTION CO.
NORTH CANTON OHIO

SHEET NO 12

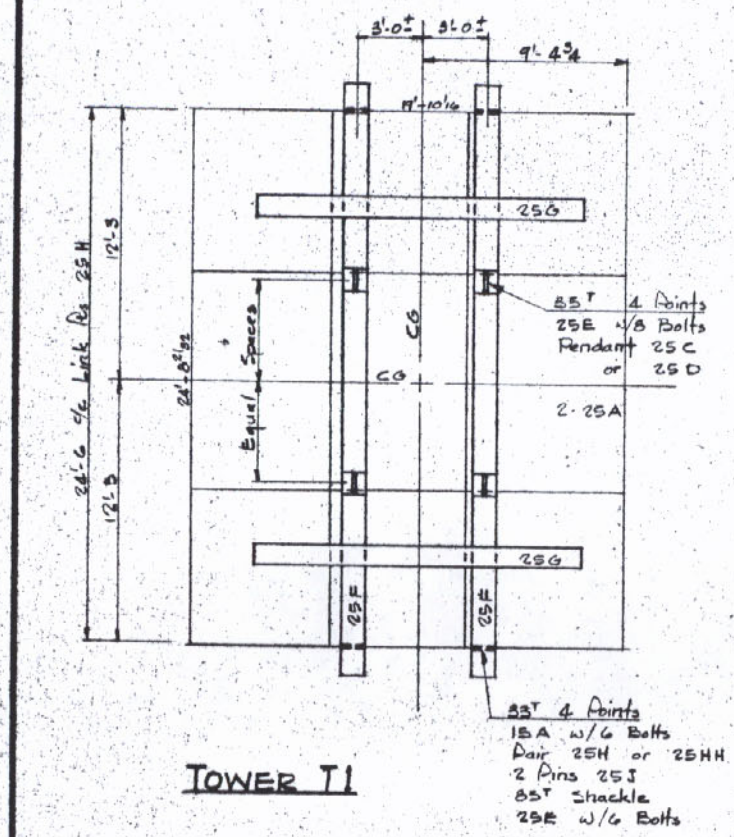

TOWER T1

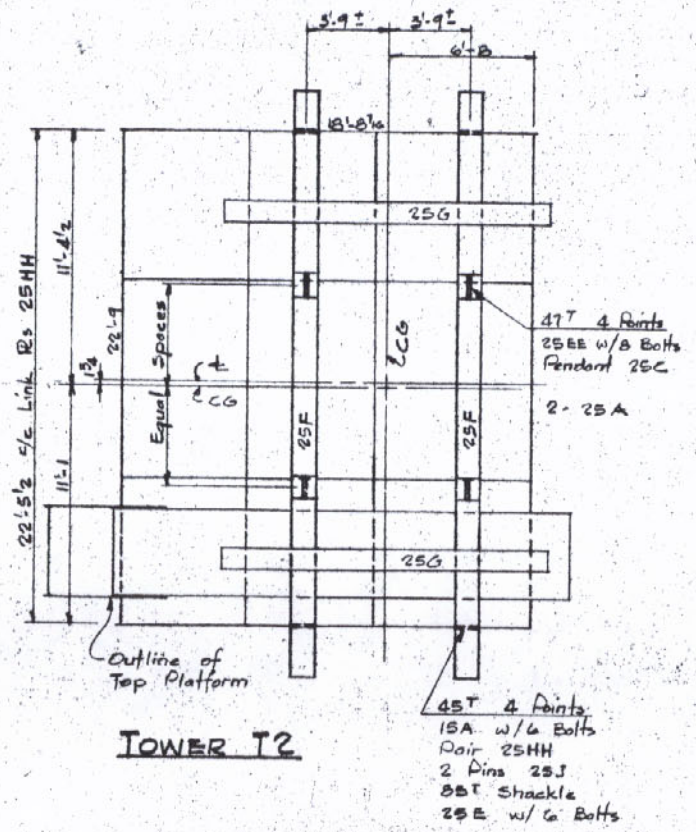

TOWER T2

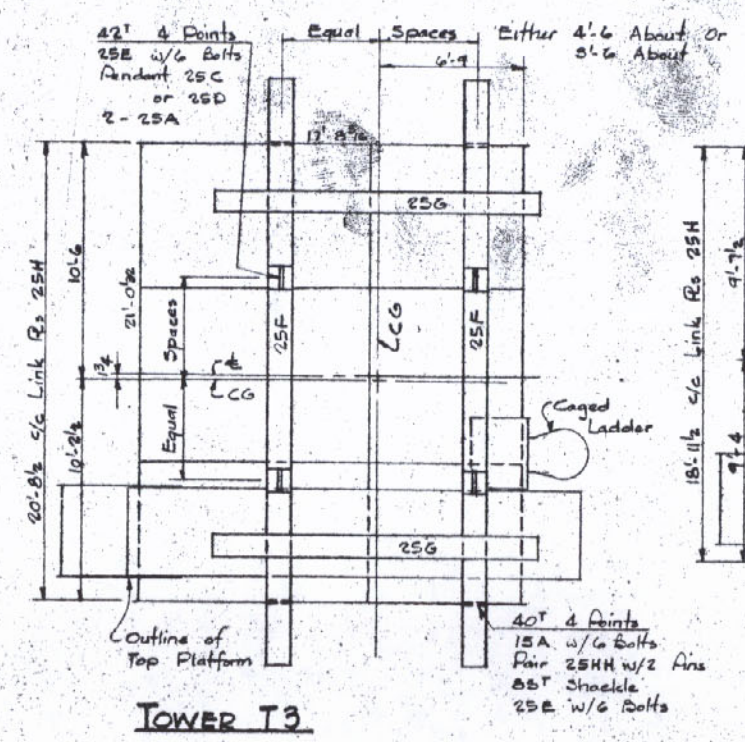

TOWER T3

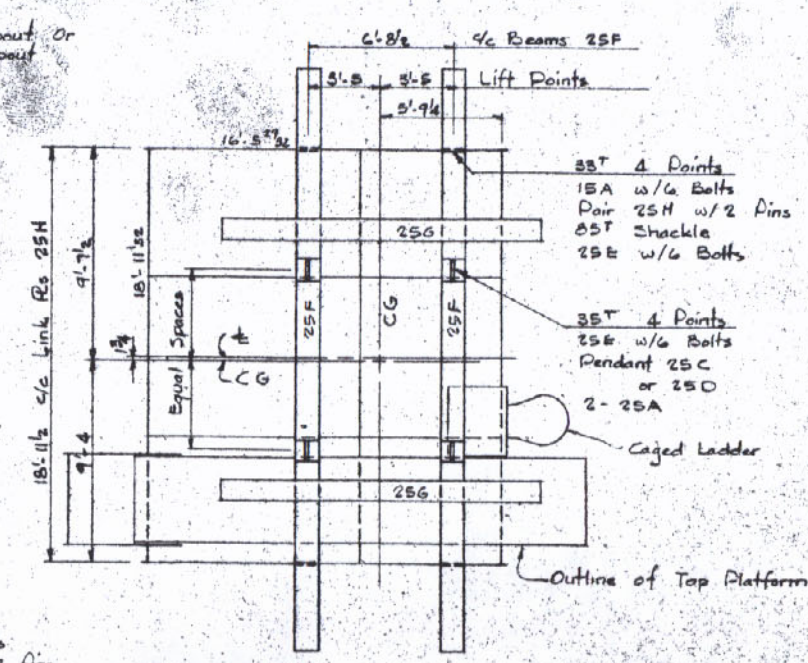

TOWER T4

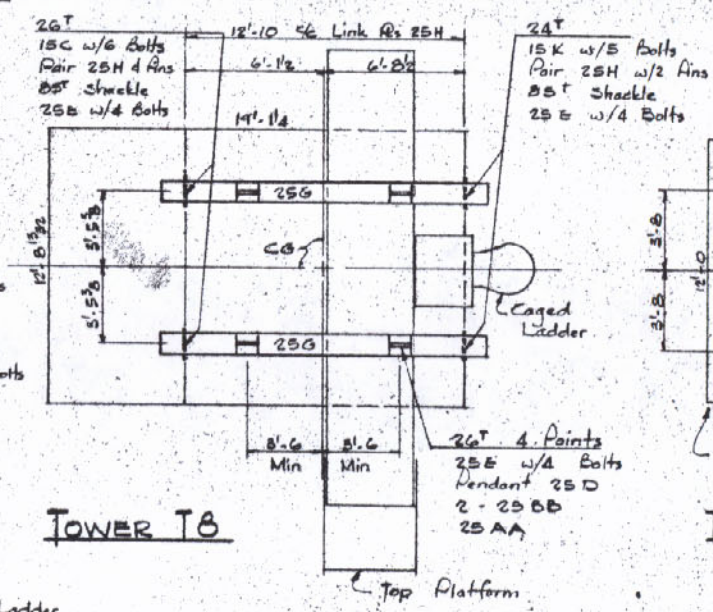

TOWER T8

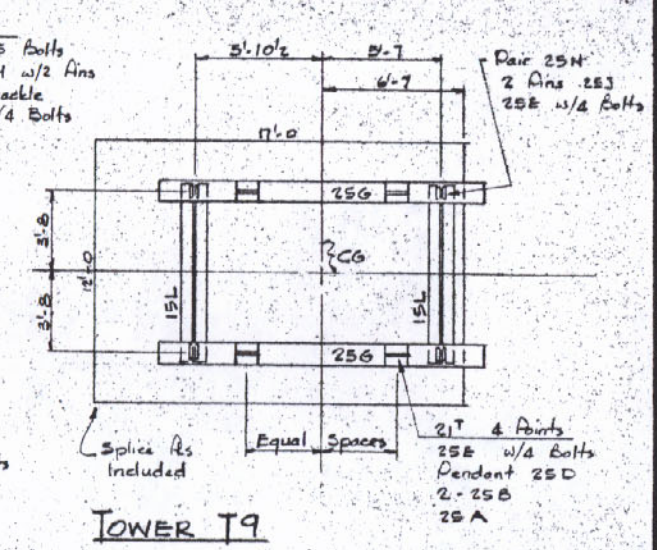

TOWER T9

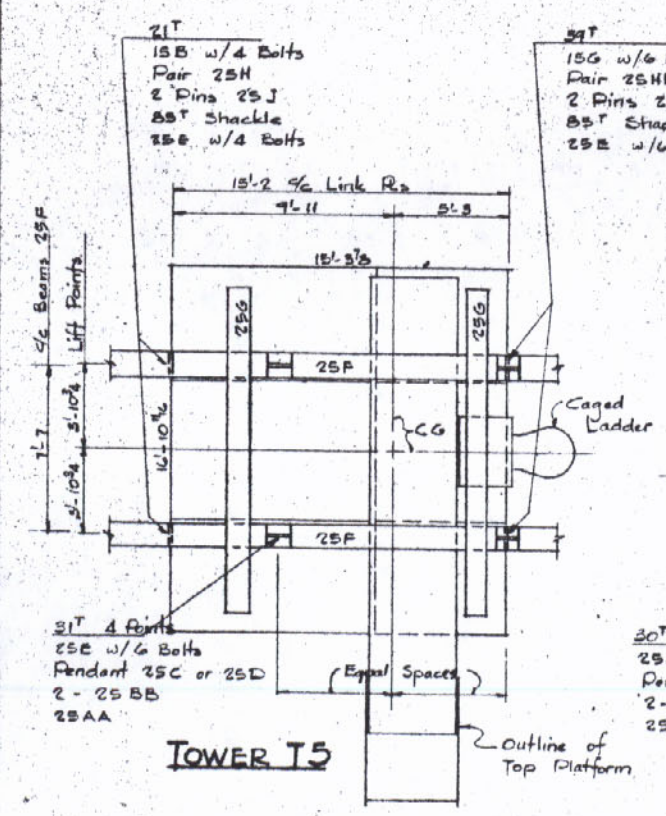

TOWER T5

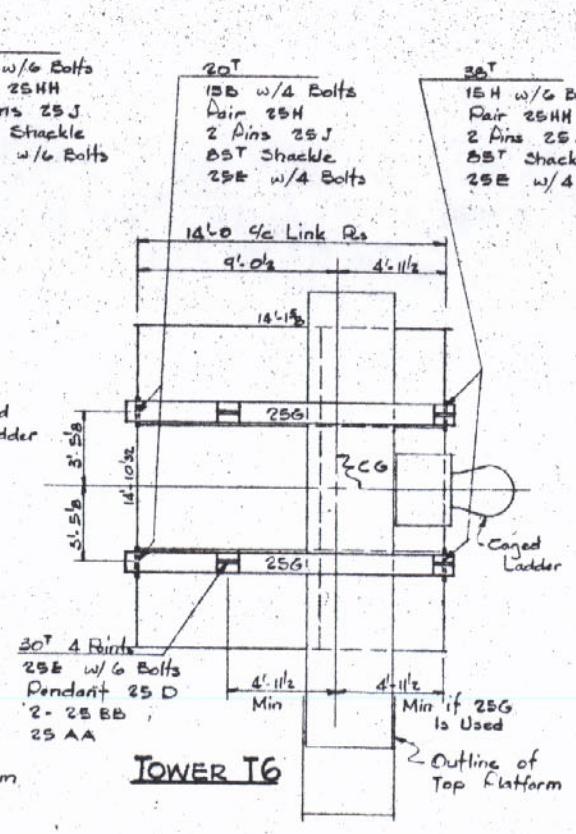

TOWER T6

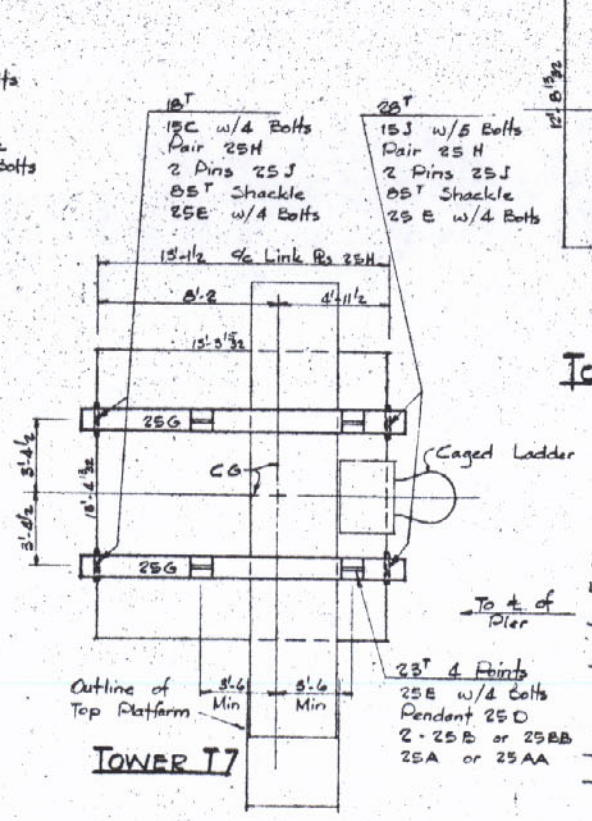

TOWER T7

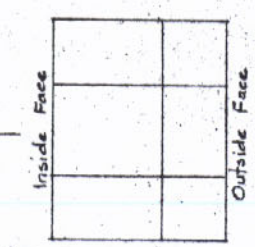

ORIENTATION OF TOWER SECTIONS

APPROVED
FOR SIZE OF MATERIAL AND STRENGTH OF CONNECTIONS
BRIDGE DESIGN SECTION
LOUIS A. GARRIDO BRIDGE DESIGN ENGINEER
By REB Date AUG 8 1979

APPROVED
For Design, Material & Workmanship
Frankland & Lienhard
By E. S. 8-7-79
FRANKLAND & LIENHARD
CONSULTING ENGINEERS

NOTES

See Dwgs 11 & 12 for crane erection.
See Dwg 13 for Lifting Lugs
See Dwg 25 for Rigging Details
See Dwg 14 for Uprighting of Tower Sections

Scale ¼" = 1'-0

TOWER ERECTION

The Review 6/1/79	REVISIONS	DATE

RIGGING LAYOUT - T1 TO T9

LOUISIANA D.O.T PROJECT # 450-37-02

ST CHARLES PARISH LULING, LA

THE MELBOURNE BROS. CONSTRUCTION CO.
NORTH CANTON OHIO

SHEET NO. 13

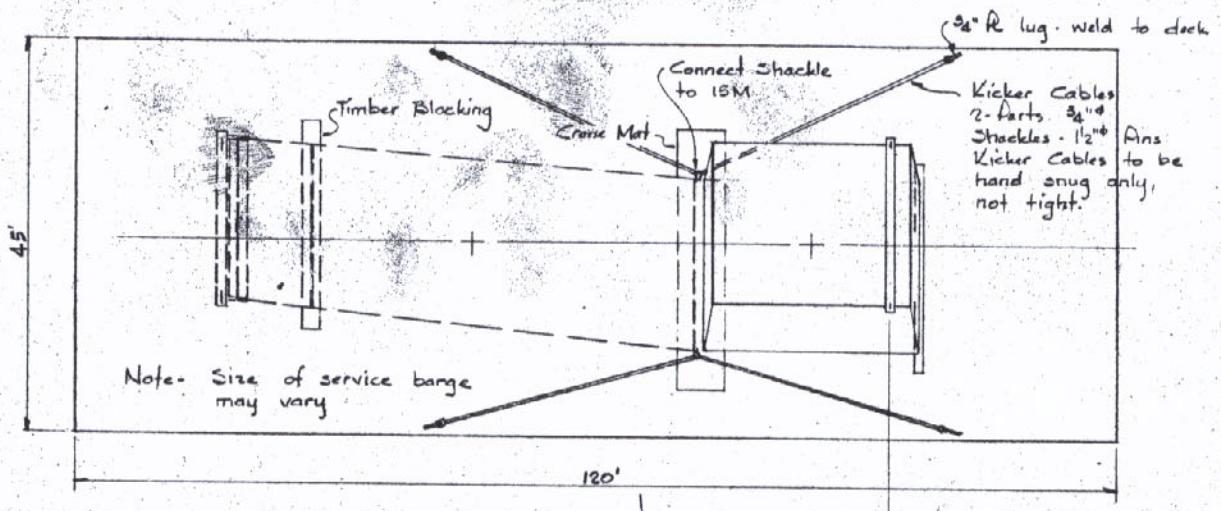

TYPICAL PLAN
1" = 10'

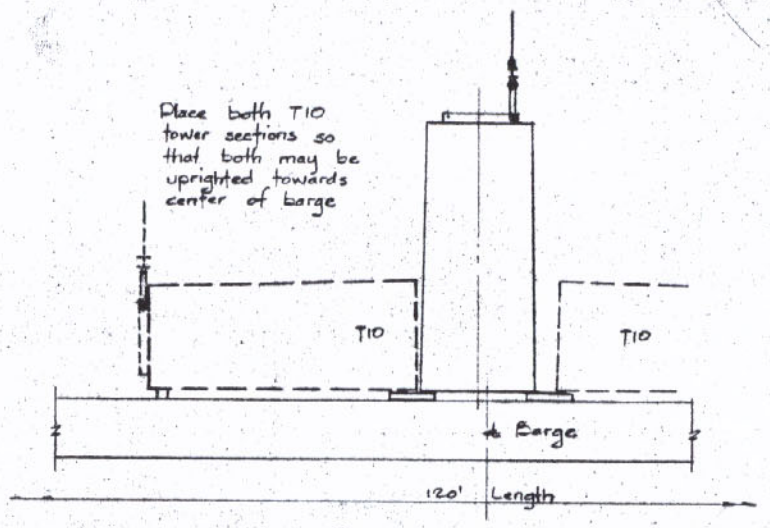

ELEVATION AT T10

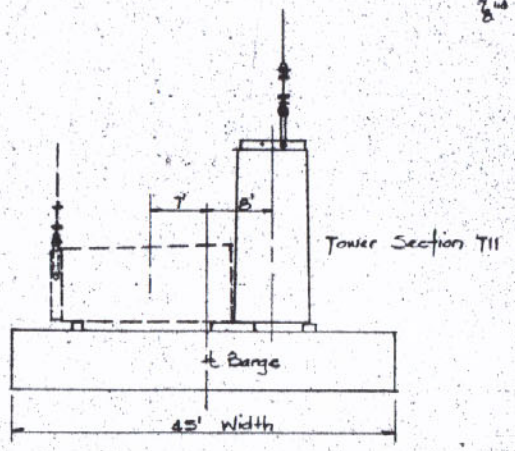

ELEVATION AT T11

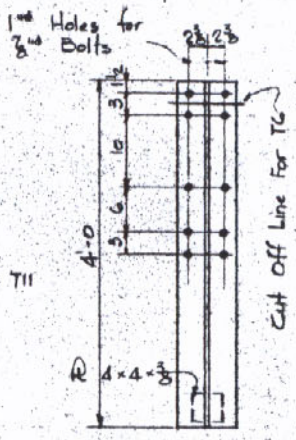

T STIFFENER
WT 7 x 21.5 x 4'-0

Note- Boom point must remain behind load point at time of break-over. Use rigging to pull load past break-over.

Note- Uprighting lifts will be made with the main boom, not with jib boom.

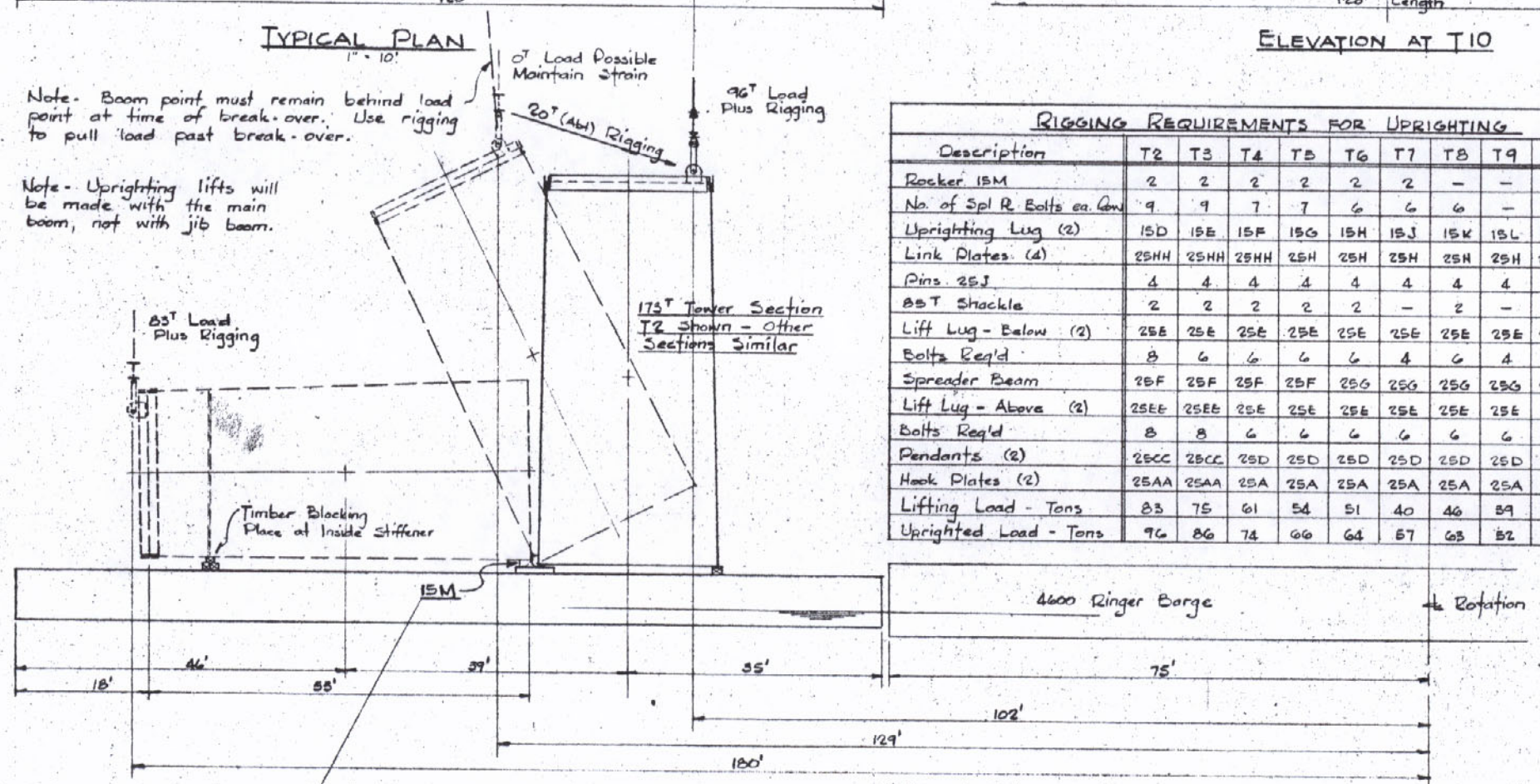

TYPICAL ELEVATION
1" = 10'

Note- Crane barge and service barge will be secured together.

RIGGING REQUIREMENTS FOR UPRIGHTING

Description	T2	T3	T4	T5	T6	T7	T8	T9	T10	T11
Rocker 15M	2	2	2	2	2	2	–	–	–	–
No. of Spl ℞ Bolts ea. Conn	9	9	7	7	6	6	6	–	–	–
Uprighting Lug (2)	15D	15E	15F	15G	15H	15J	15K	15L	15L	15L
Link Plates (4)	25HH	25HH	25HH	25H	25H	25H	25H	25H	25H	25HH
Pins 25J	4	4	4	4	4	4	4	4	4	4
85T Shackle	2	2	2	2	2	–	2	–	–	2
Lift Lug - Below (2)	25E	25E	25E	25E	25E	25E	25E	25E	25E	25EE
Bolts Req'd	8	6	6	6	6	4	6	4	4	10
Spreader Beam	25F	25F	25F	25F	25G	25G	25G	25G	25G	25G
Lift Lug - Above (2)	25EE	25EE	25E	25E	25E	25E	25E	25E	25E	25EE
Bolts Req'd	8	8	6	6	6	6	6	6	6	10
Pendants (2)	25CC	25CC	25D	25D	25D	25D	25D	25D	25D	25CC
Hook Plates (2)	25AA	25AA	25A	25A	25A	25A	25A	25A	25A	25AA
Lifting Load - Tons	83	75	61	54	51	40	46	39	40	80
Uprighted Load - Tons	96	86	74	66	64	57	63	52	54	121

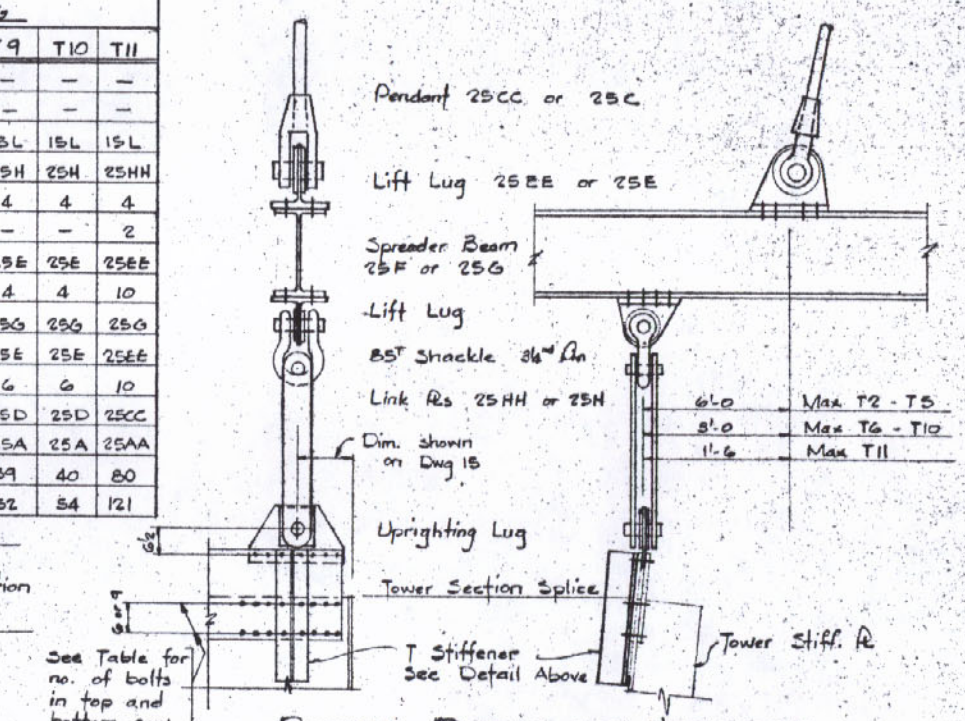

RIGGING DETAILS FOR UPRIGHTING

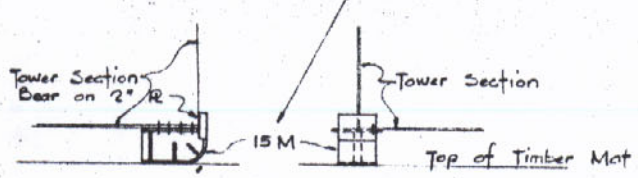

ELEVATION AND VIEW AT 15M
1/2" = 1'-0

APPROVED
FOR SIZE OF MATERIAL AND STRENGTH OF CONNECTIONS
LOUIS A. CARRIDO BRIDGE DESIGN SECTION
BRIDGE DESIGN ENGINEER
Date Aug 9 1979

APPROVED
For Design, Material & Workmanship
Frankland & Lienhard
By E.S. 8-29-79
FRANKLAND & LIENHARD
CONSULTING ENGINEERS

See Dwg 15 for Uprighting
See Dwg 25 for Rigging Details

TOWER SECTIONS

REVISIONS	DATE
T Stiffeners All Splice ℞s	8/8/79
Riders, Notes	11/5/79
For Review	6/1/79

UPRIGHTING FOR ERECTION
LOUISIANA DOT PROJECT #450-37-02
ST CHARLES PARISH LULING, LA

THE MELBOURNE BROS. CONSTRUCTION CO.
NORTH CANTON OHIO
JOB NO. 1129 DATE 8-29-79

SHEET NO. 14

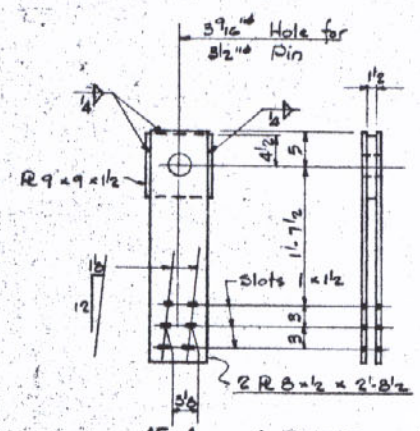

15A 4 REQ'D
FOR ERECTION T1 - T4

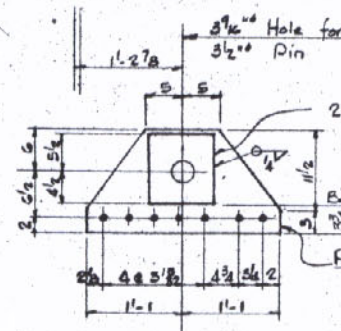

15D 2 REQ'D
FOR UPRIGHTING T2

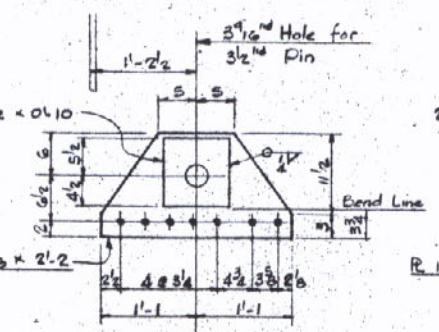

15E 2 REQ'D
FOR UPRIGHTING T3

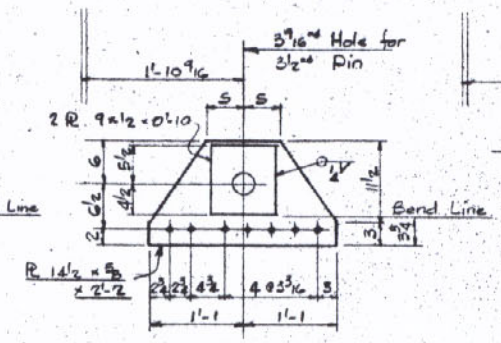

15F 2 REQ'D
FOR UPRIGHTING T4

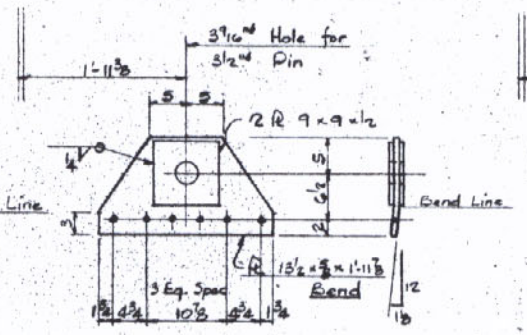

15G 2 REQ'D
FOR ERECTING AND UPRIGHTING T5

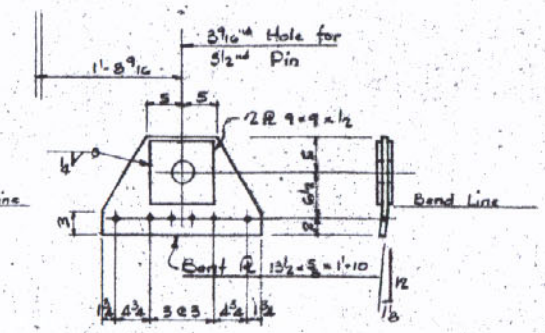

15H 2 REQ'D
FOR ERECTING AND UPRIGHTING T6

Note- 15D, 15E & 15F are to be bent to bevel of 1/8/12 on the bend line, the same as shown for 15G thru 15K.

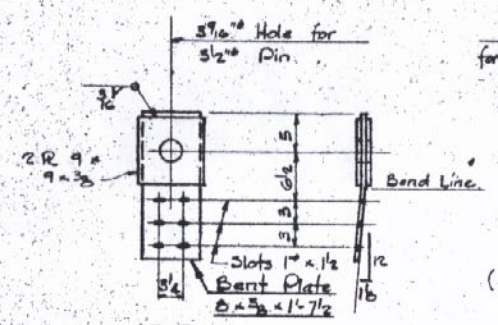

15B 2 REQ'D
FOR ERECTION T5, T6

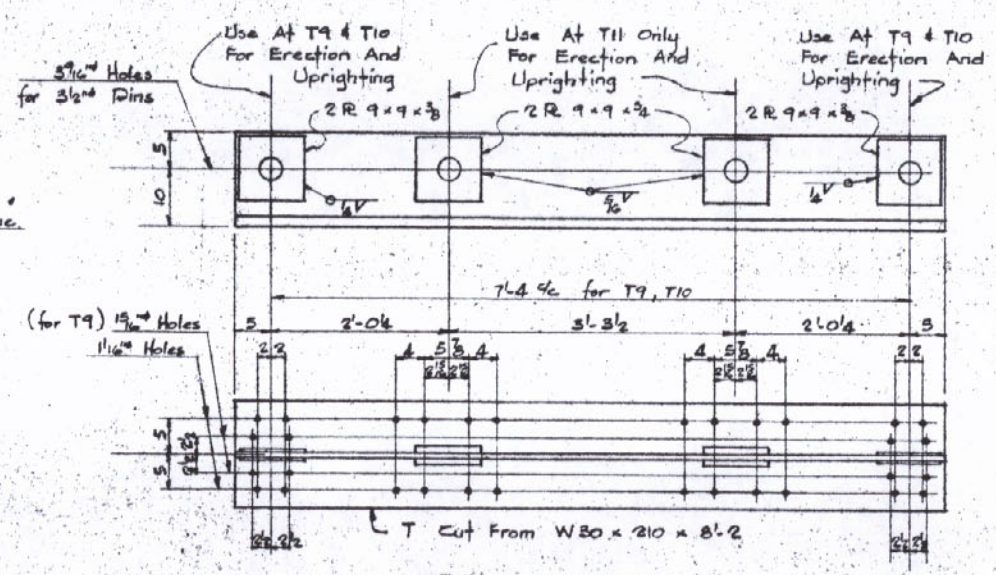

15L 2 REQ'D
FOR ERECTING AND UPRIGHTING T9, T10 & T11

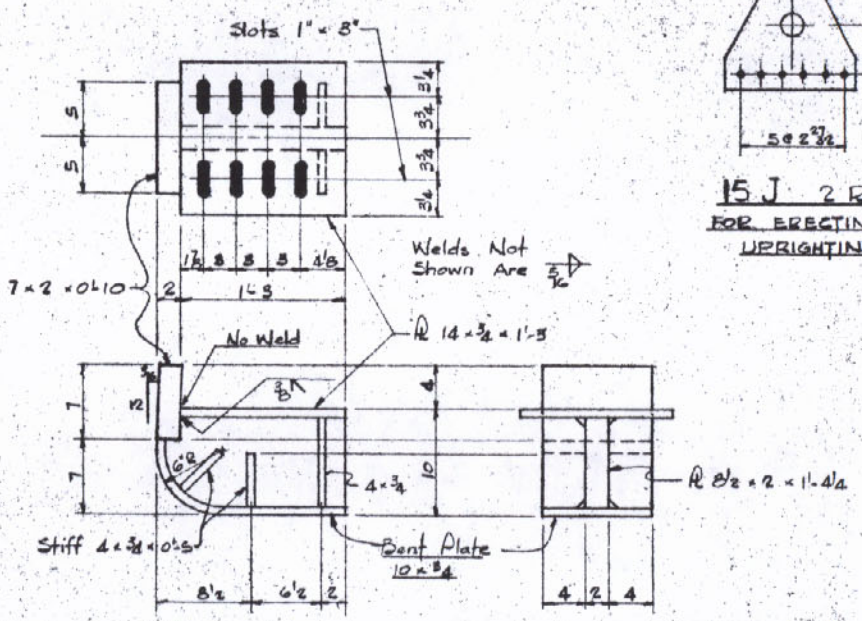

15M 2 REQ'D
FOR UPRIGHTING T2 THRU T7
Scale 1 1/2" = 1'-0

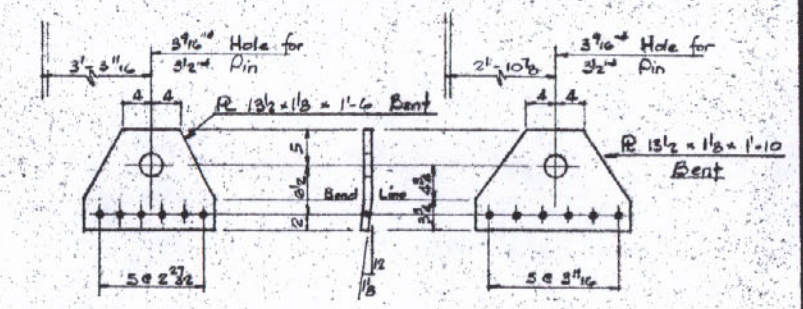

15J 2 REQ'D
FOR ERECTING AND UPRIGHTING T7

15K 2 REQ'D
FOR ERECTING AND UPRIGHTING T8

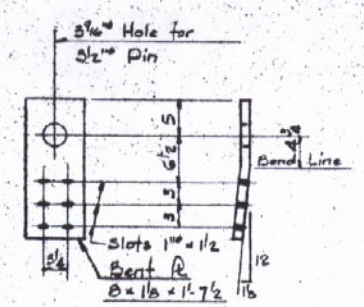

15C 2 REQ'D
FOR ERECTION T7, T8

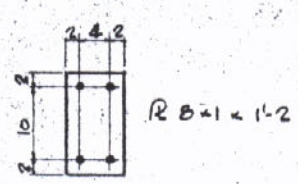

15N WASHER PLATE
16 REQ'D FOR T9, T10, T11

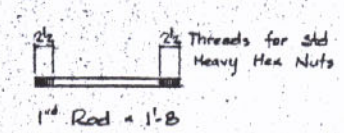

15P TIE DOWN BOLT
66 REQ'D MAT'L - HIGH STRENGTH
MIN Fy = 60 KSI

APPROVED
FOR SIZE OF MATERIAL AND STRENGTH OF CONNECTIONS
BRIDGE DESIGN SECTION
LOUIS A. GARRIDO BRIDGE DESIGN ENGINEER
By REB Date AUG 8 1979

APPROVED
For Design, Material & Workmanship
Frankland & Lienhard
By E.S. 8-7-79
FRANKLAND & LIENHARD
CONSULTING ENGINEERS

NOTES

Material - A36 U.N.
Open Holes - 1 9/16" U.N.
See Dwgs 11, 12 & 13 for erection of Tower Sections.
See Dwg 14 for uprighting of Tower Sections.
Weld - E70xx
Paint - One Shop Coat Red Lead

Scale 1" = 1'-0 U.N.

REVISIONS	DATE
For Review	6/1/77
For Prior	5/10/79

DETAILS OF LUGS FOR TOWER ERECTION AND UPRIGHTING

LOUISIANA DOT PROJECT # 450-37-02
ST CHARLES PARRISH LULING, LA

THE MELBOURNE BROS. CONSTRUCTION CO.
NORTH CANTON OHIO

JOB NO. 1429 DATE 4-6-77

SHEET NO. 15 OF

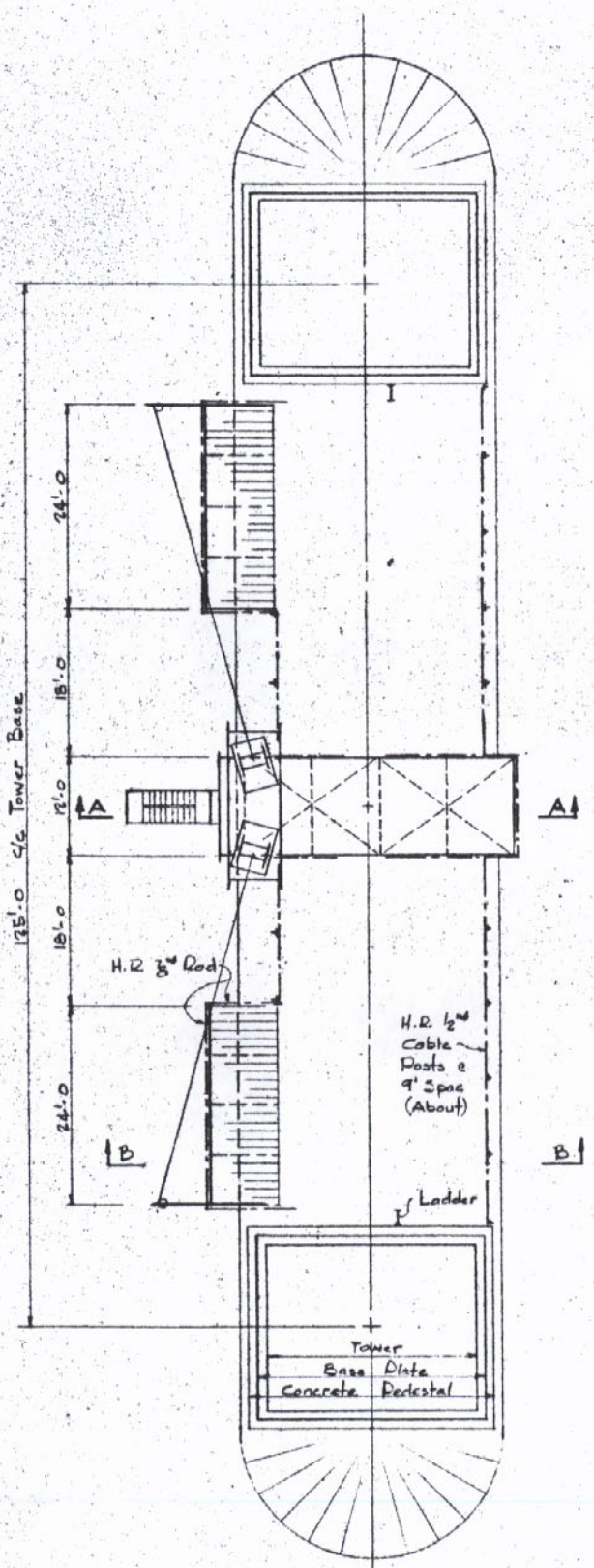

PLAN AT PIER 2
SIMILAR AT PIER 3
1" = 10'

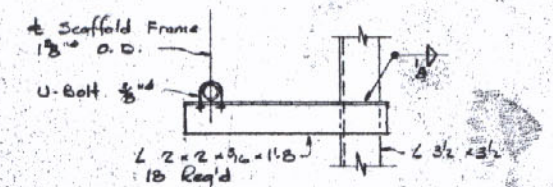

DETAIL OF TYPICAL BRACING - STAIRWELL FRAME TO SUPPORT

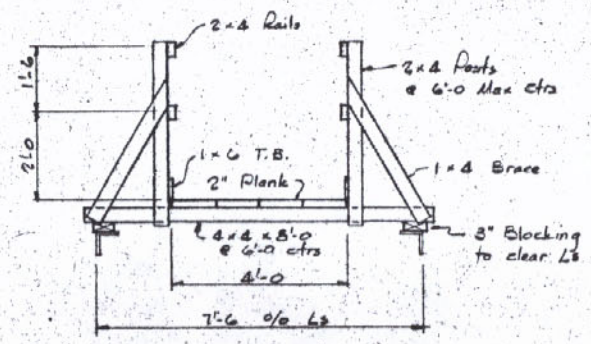

SECTION THRU WALKWAY

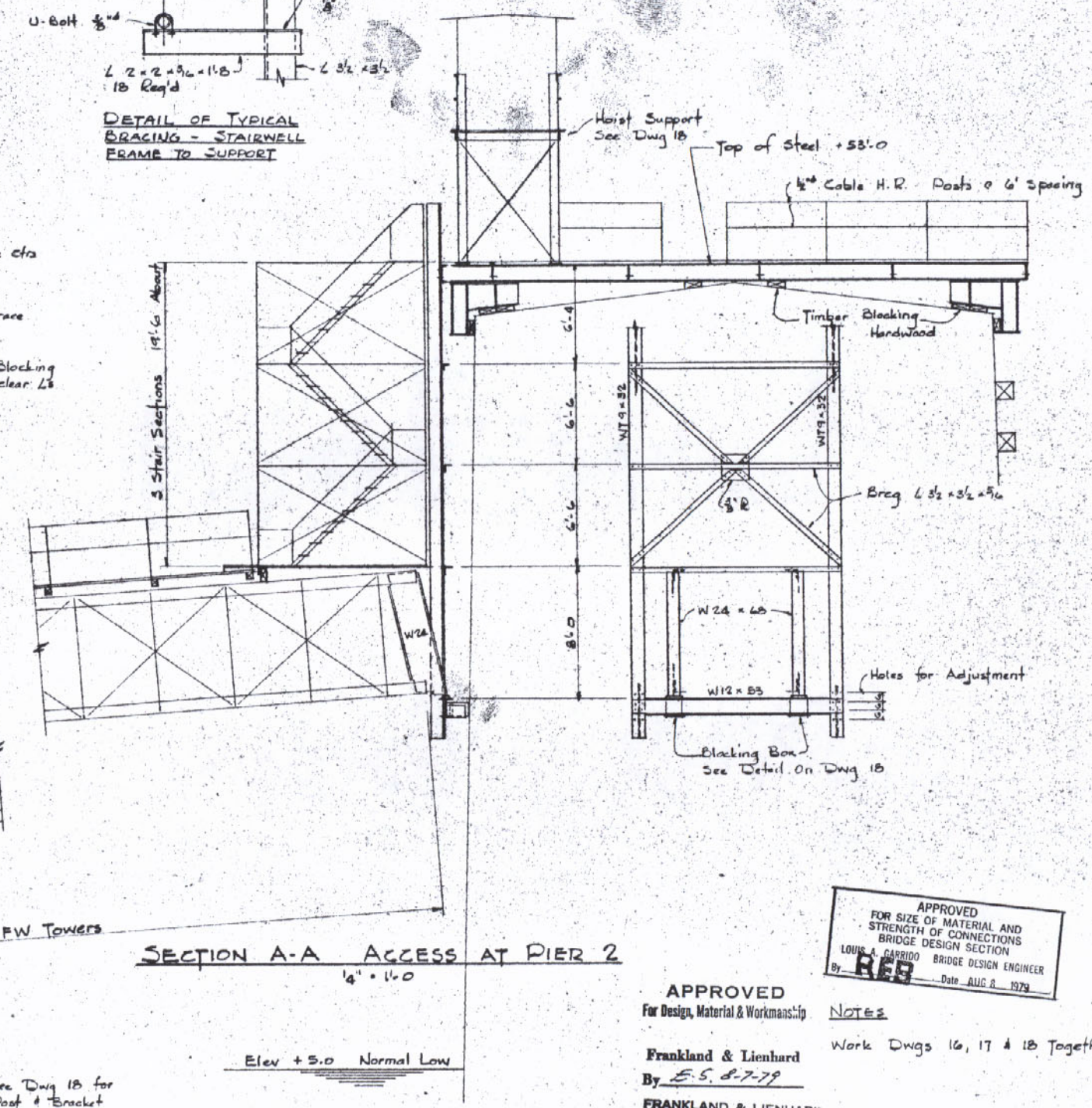

SECTION A-A ACCESS AT PIER 2
1/4" = 1'-0

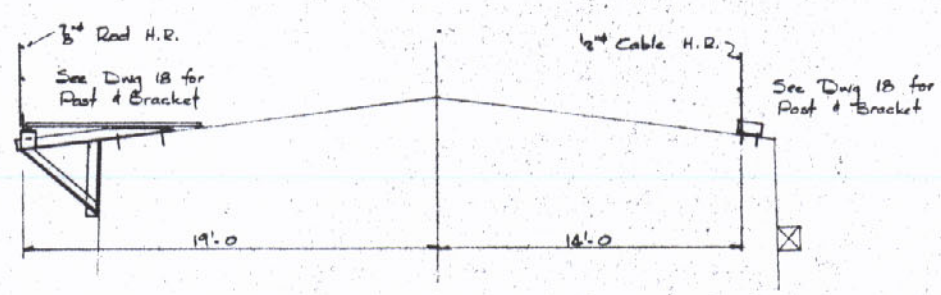

SECTION B-B

APPROVED
FOR SIZE OF MATERIAL AND STRENGTH OF CONNECTIONS
BRIDGE DESIGN SECTION
LOUIS A. GARRIDO BRIDGE DESIGN ENGINEER
By REB Date AUG 8 1979

APPROVED
For Design, Material & Workmanship
Frankland & Lienhard
By E.S. 8-7-79
FRANKLAND & LIENHARD
CONSULTING ENGINEERS

NOTES

Work Dwgs 16, 17 & 18 Together

REVISIONS	DATE
For Review	6/1/77
For Fabr	5/23/78

ACCESS & LAYOUT AT PIER 2
LOUISIANA DOT PROJECT #450-37-02
ST CHARLES PARISH LULING, LA

THE MELBOURNE BROS. CONSTRUCTION CO.
NORTH CANTON OHIO
JOB NO. 1029 DATE 5-6-77
SHEET NO. 16 OF

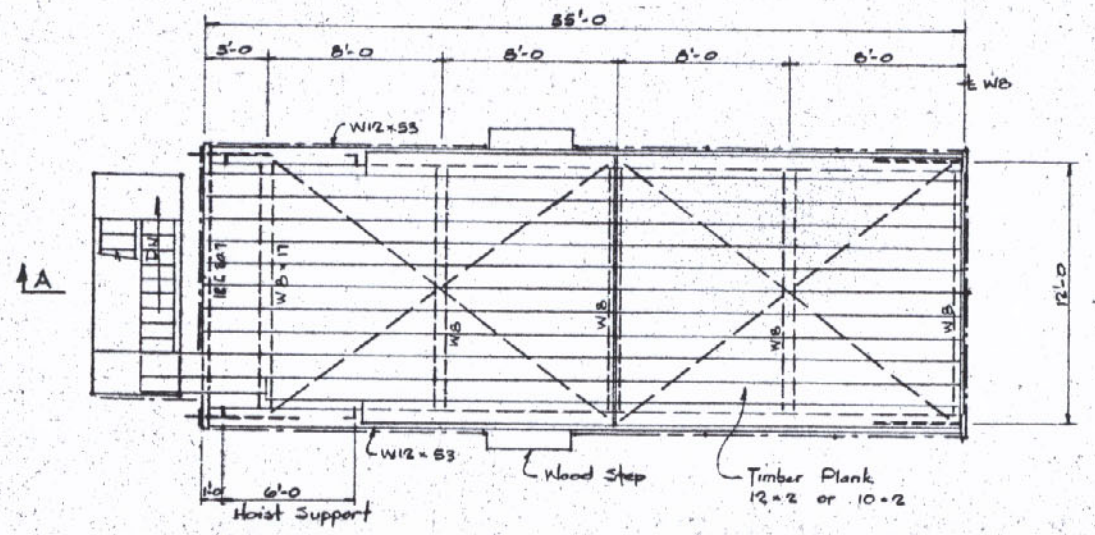

PLAN OF PLATFORM AT PIER 3
SAME AT PIER 2 EXCEPT ACCESS
1/4" = 1'-0

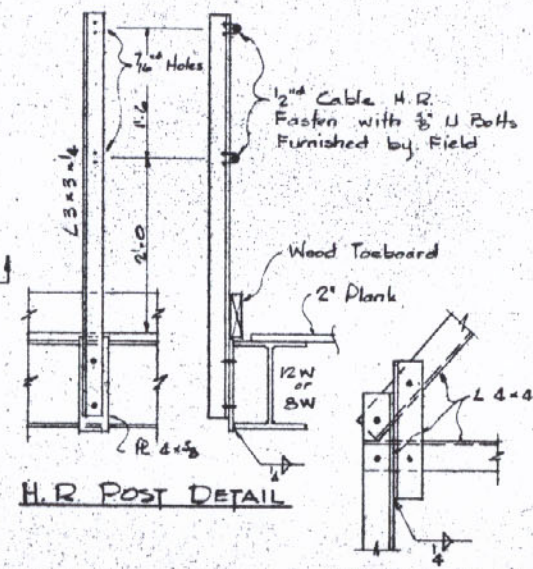

H.R. POST DETAIL

DETAIL B

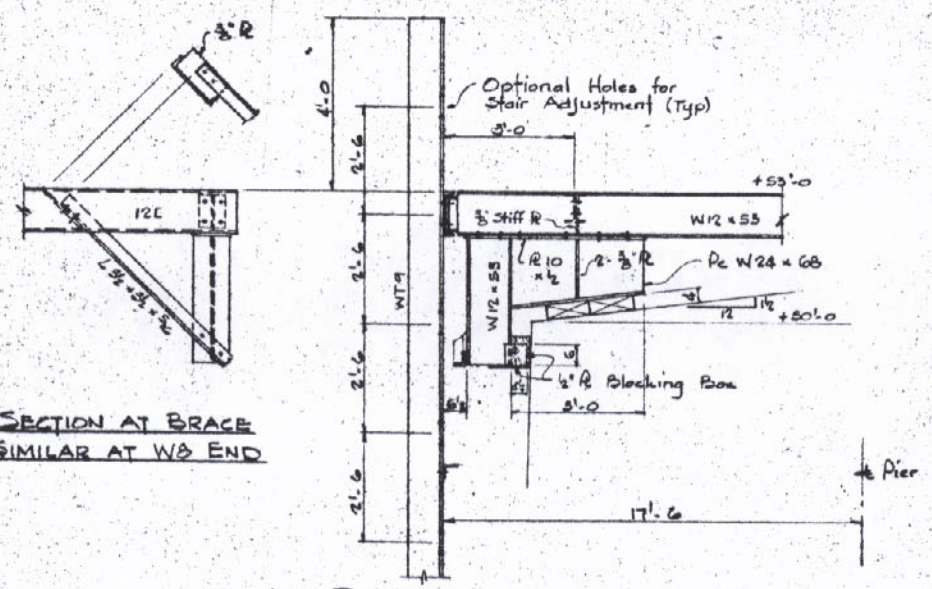

SECTION AT BRACE
SIMILAR AT WB END

DETAIL A

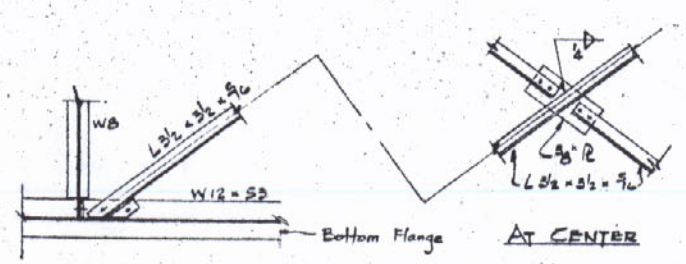

AT BEAMS

AT CENTER

BRACING DETAILS

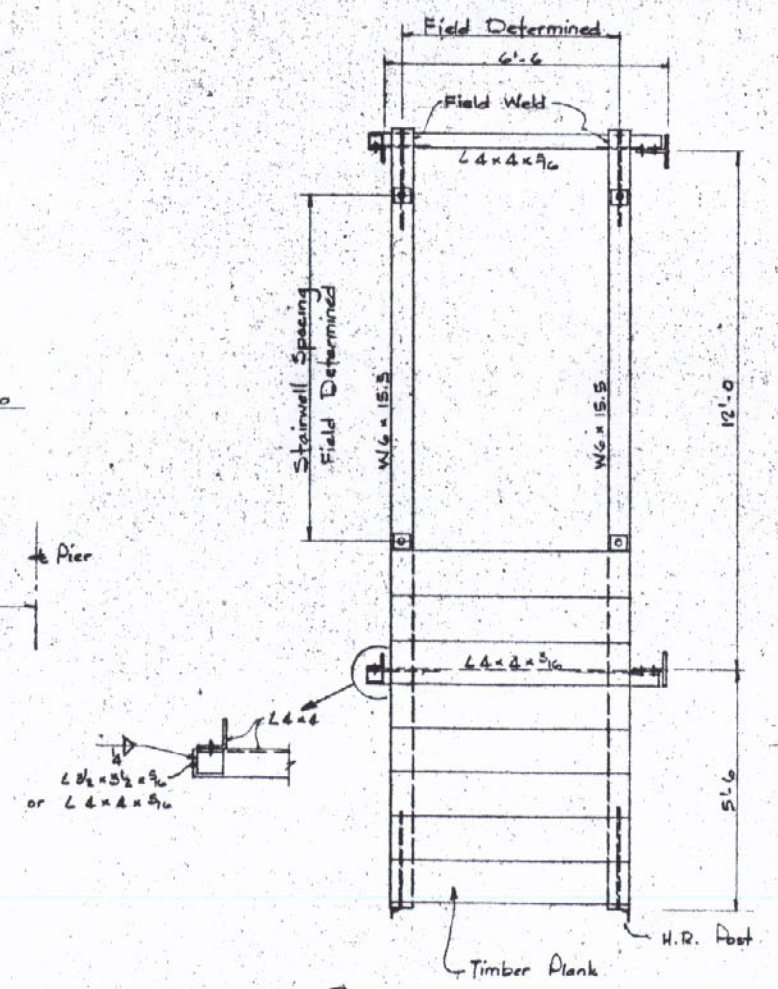

PLAN AT STAIR SUPPORT

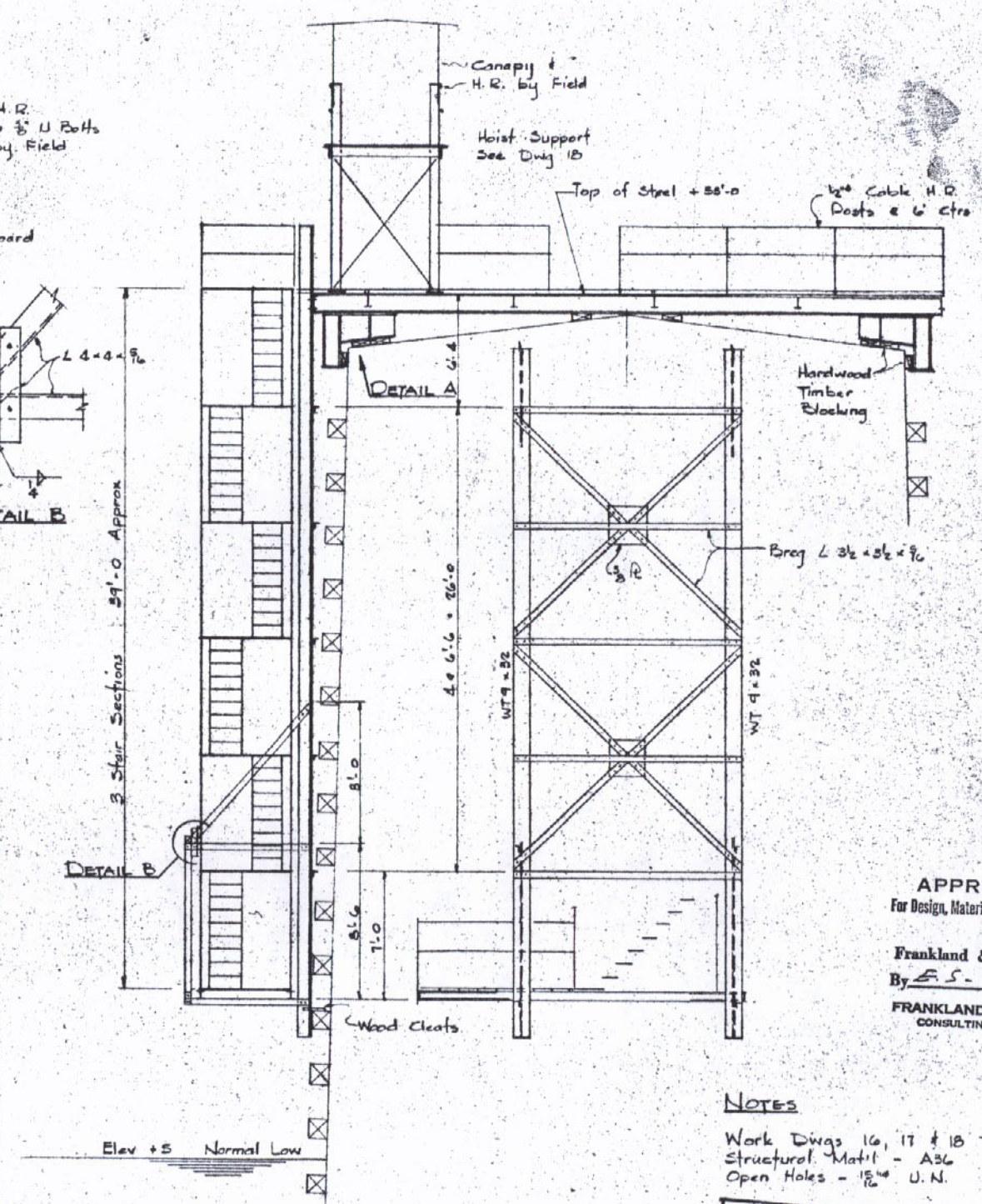

SECTION A-A ACCESS AT PIER 3
1/4" = 1'-0

APPROVED
For Design, Material & Workmanship
Frankland & Lienhard
By E.S. 8-7-79
FRANKLAND & LIENHARD
CONSULTING ENGINEERS

NOTES

Work Dwgs 16, 17 & 18 Together
Structural Matl - A36
Open Holes - 15/16" U.N.

APPROVED
FOR SIZE OF MATERIAL AND
STRENGTH OF CONNECTIONS
BRIDGE DESIGN SECTION
LOUIS A. GARRICK BRIDGE DESIGN ENGINEER
By ____ Date AUG 8 1979

REVISIONS	DATE
For Review F.&L.	6/1/79 5/28/79

ACCESS & LAYOUT AT PIER 3
LOUISIANA DOT PROJECT # 450-37-02
ST CHARLES PARISH LULING, LA.
THE MELBOURNE BROS. CONSTRUCTION CO.
NORTH CANTON OHIO
SHEET NO 17

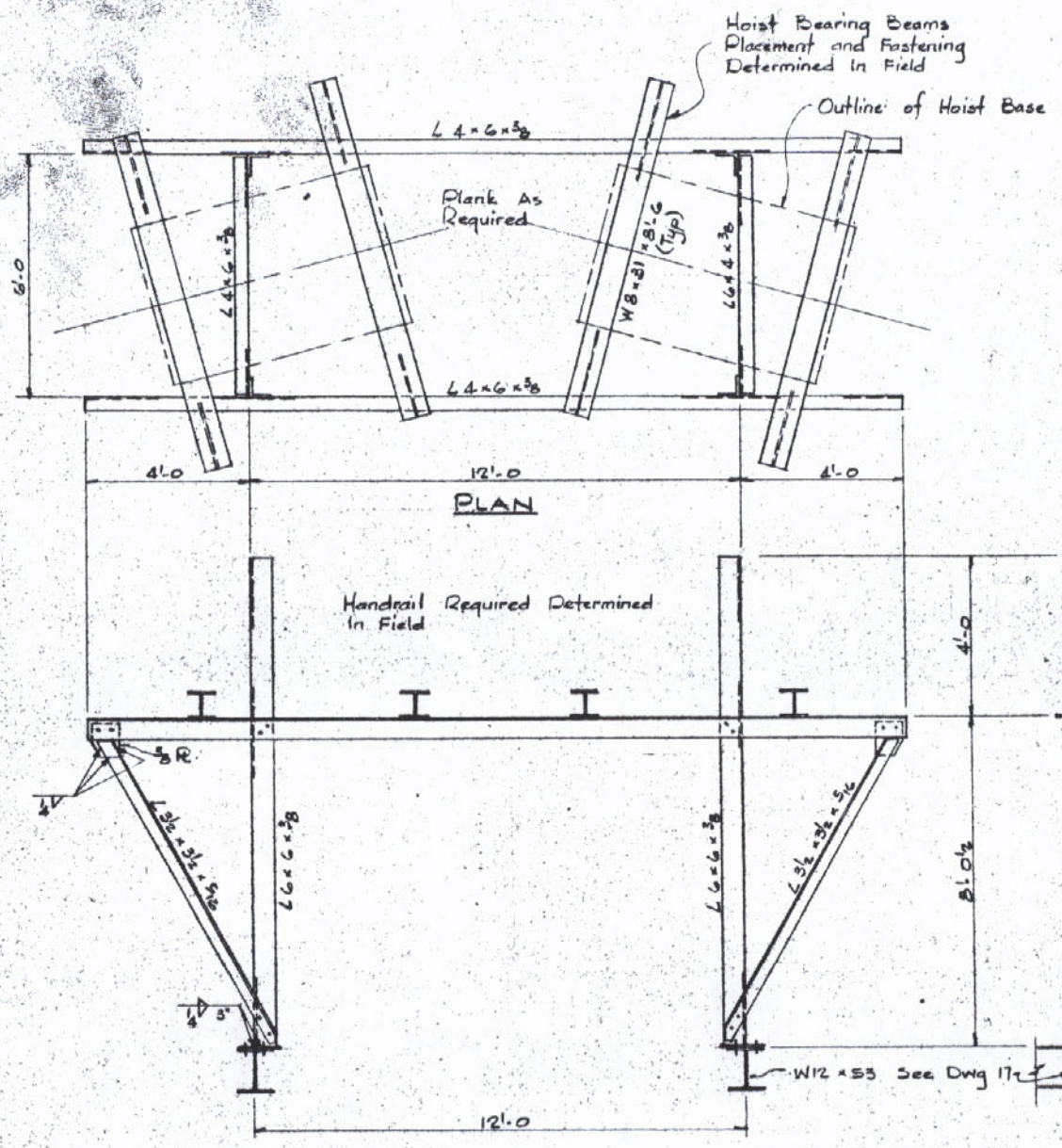

ELEVATION

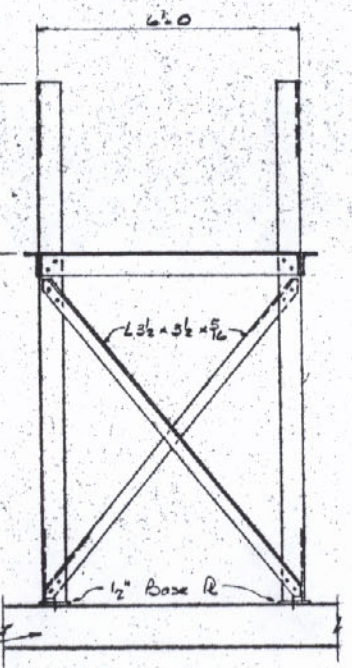

END VIEW

HOIST SUPPORT AT PIER PLATFORMS

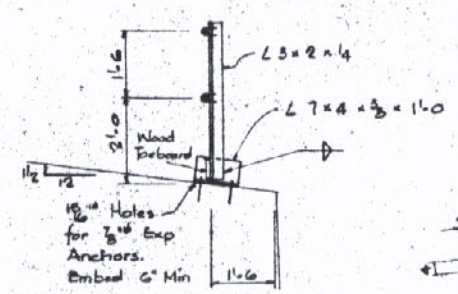

HANDRAIL POST AT PIER
28 REQ'D FOR PIERS 2 & 3

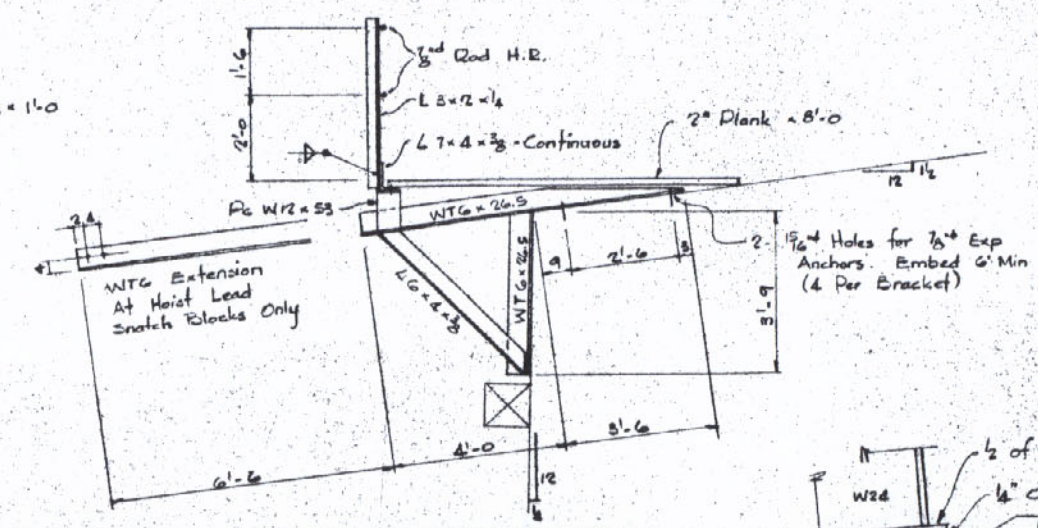

POST AND BRACKET DETAIL
6 REQ'D WITHOUT EXTENSIONS
4 REQ'D WITH EXTENSIONS

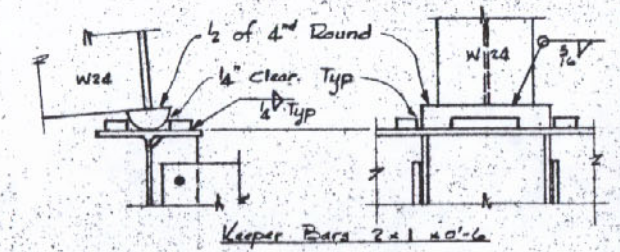

Keeper Bars 2×1×0'-6

DETAIL AT WALKWAY BEARING
1½" = 1'-0

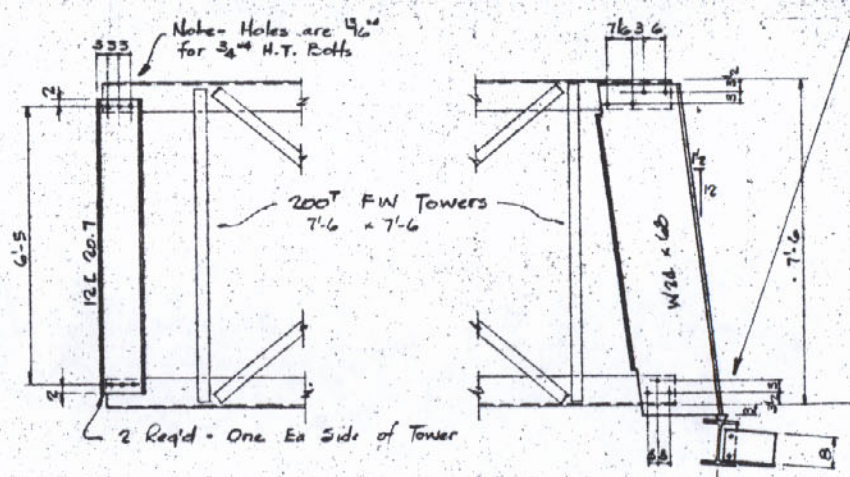

DETAILS AT ENDS OF ACCESS WALKWAY
See Section A-A Dwg 16

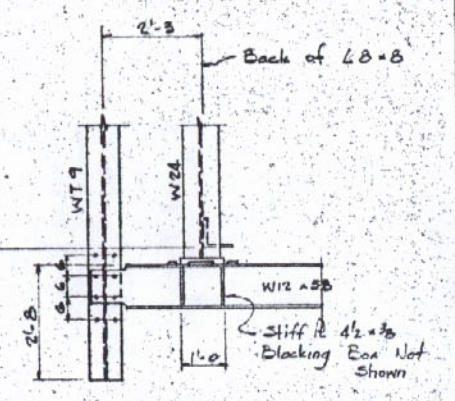

APPROVED
For Design, Material & Workmanship

Frankland & Lienhard
By E.S. 8-7-79

FRANKLAND & LIENHARD
CONSULTING ENGINEERS

NOTES

Work - Dwgs 16, 17 & 18 Together
Structural Mat'l - A36
Open Holes - 15/16" U.N.

APPROVED
FOR SIZE OF MATERIAL AND STRENGTH OF CONNECTIONS
BRIDGE DESIGN SECTION
LOUIS J. CAPUTO BRIDGE DESIGN ENGINEER
By REB AUG 8 1979

REVISIONS	DATE
For Review	6/1/79
For Fabr	9/21/78

DETAILS AT PIERS 2 & 3

LOUISIANA DOT PROJECT # 450-37-02

ST CHARLES PARISH LULING, LA

THE MELBOURNE BROS. CONSTRUCTION CO.
NORTH CANTON OHIO

JOB NO. 1429 DATE 5-16-79

SHEET NO. 18 OF

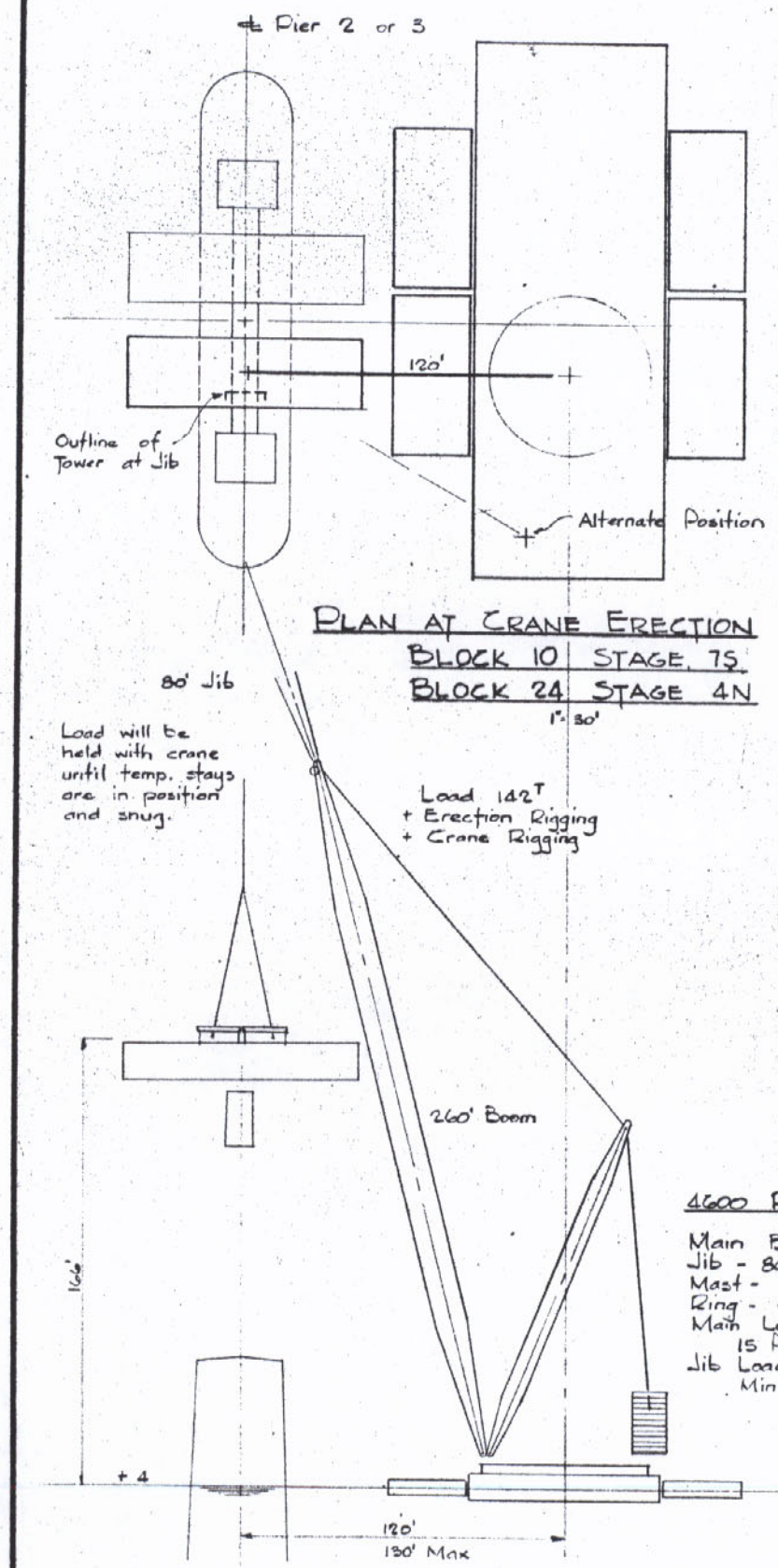

PLAN AT CRANE ERECTION
BLOCK 10 STAGE 7S
BLOCK 24 STAGE 4N
1" = 30'

4600 PLATFORM RINGER

Main Boom - 260' #63
Jib - 80' #27
Mast - 130' #27
Ring - 60'd
Main Load Falls
15 Parts 1¼"d W. R.
Jib Load Falls
Min 8 Parts 1¼"d W. R.

ELEVATION
1" = 30'

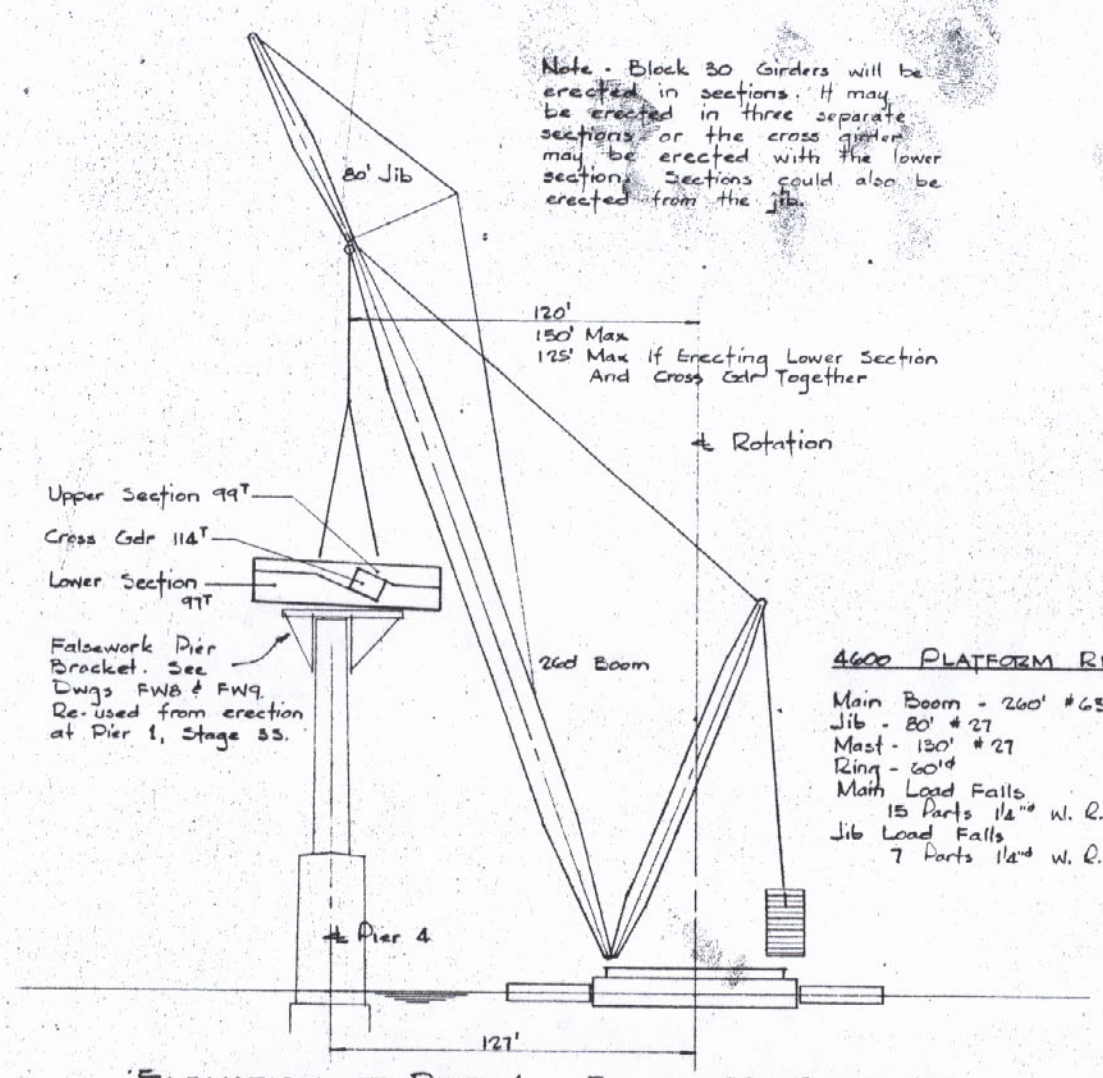

Note - Block 30 Girders will be erected in sections. It may be erected in three separate sections or the cross girder may be erected with the lower section. Sections could also be erected from the jib.

4600 PLATFORM RINGER

Main Boom - 260' #63
Jib - 80' #27
Mast - 130' #27
Ring - 60'd
Main Load Falls
15 Parts 1¼"d W. R.
Jib Load Falls
7 Parts 1¼"d W. R.

ELEVATION AT PIER 4 - BLOCK 30 STAGE 1N
1" = 30'

Block 30 will be initially set 3 inches to the north on the Pier Brackets for later end span closure in Stage 7N, dwg EP 13.

The Expansion Bearing Link Plates will be erected with the bottom portion of Block 30.

For Stage 1N, the Pier Brackets are used only to support the weight of Block 30. At the end of Stage 1N, the Bearing Link Plates will support the weight of Block 30. The Pier Brackets will be blocked snug beneath the girders, and will act only as balancing supports.

The maximum possible loads on the Pier Brackets will be at Stage 2N (dwg 20) when Blocks 31, 32 & 33 are erected.

APPROVED
LOUIS A. GARRIDO
BRIDGE DESIGN ENGINEER
By RFB Date JAN 29 1980

APPROVED
For Design, Material & Workmanship
Frankland & Lienhard
By E.S. 1-25-1980

RECEIVED
DEC 10 1979

Reference to Procedure - HNTB Dwgs EP12 & 14

Typical Rigging - Dwg 24
Rigging Details - Dwgs 25 & 26

REVISIONS	DATE
Rev. Eng. Link Note	12/6/79
Add Notes, Ref	11/21/79
For Review	8/31/79

GIRDER ERECTION - PIERS 2, 3 & 4
LOUISIANA DOT PROJECT #450-37-02
ST. CHARLES PARISH LULING, LA

THE MELBOURNE BROS. CONSTRUCTION CO.
NORTH CANTON OHIO

JOB NO. 1429 DATE 8-13-79

SHEET NO. 19 OF

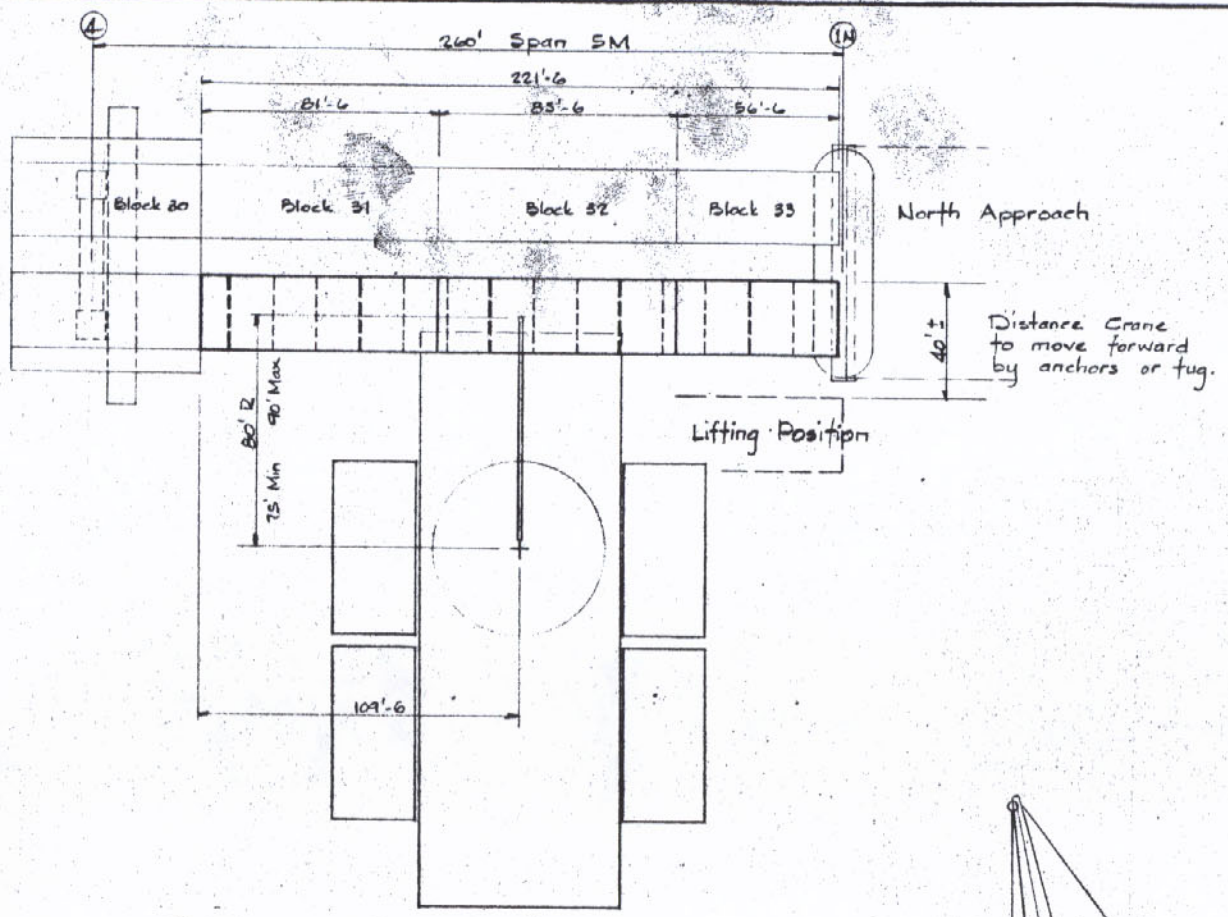

PLAN AT CRANE ERECTION

STAGE 2N - HNTB DWG EP 12

1" = 30'

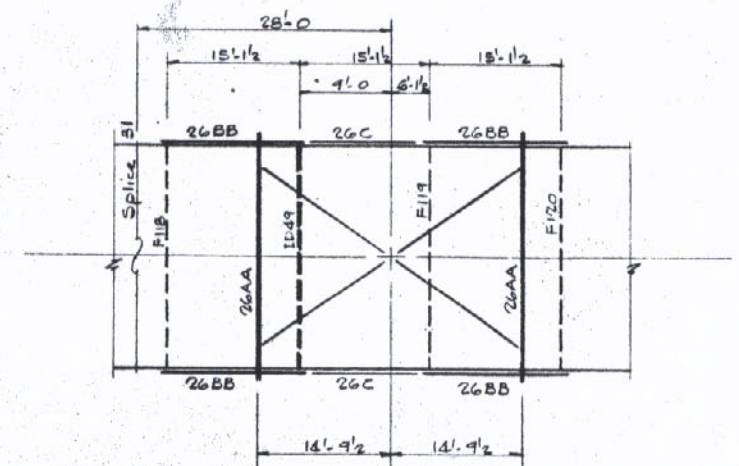

PLAN AT RIGGING

1" = 10'

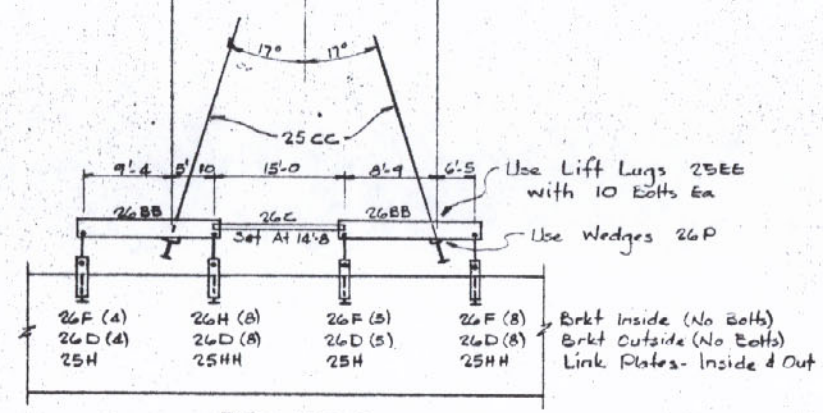

ELEVATION

1" = 10'

Pier Brackets and girders at Block 30 will have to be set at the correct grade to allow erection of girders 31, 32 & 33. For elevations see Dwg FW 9.

Girder at Pier 1N should not be set or resting on bearings until splice #30 is secure.

The release of the crane and the release of the Pier bracket blocking (jacks and shims) should be worked together after the splice 30 is secure. If the crane is totally released before bracket blocking, then the pier bracket obtains its maximum loading as allowed for on FW8 and FW9.

All of Span 5M is initially set 3 inches to the north at normal temperature (See Block 30, dwg 19, stage 1N) for later end span closure in Stage 7N.

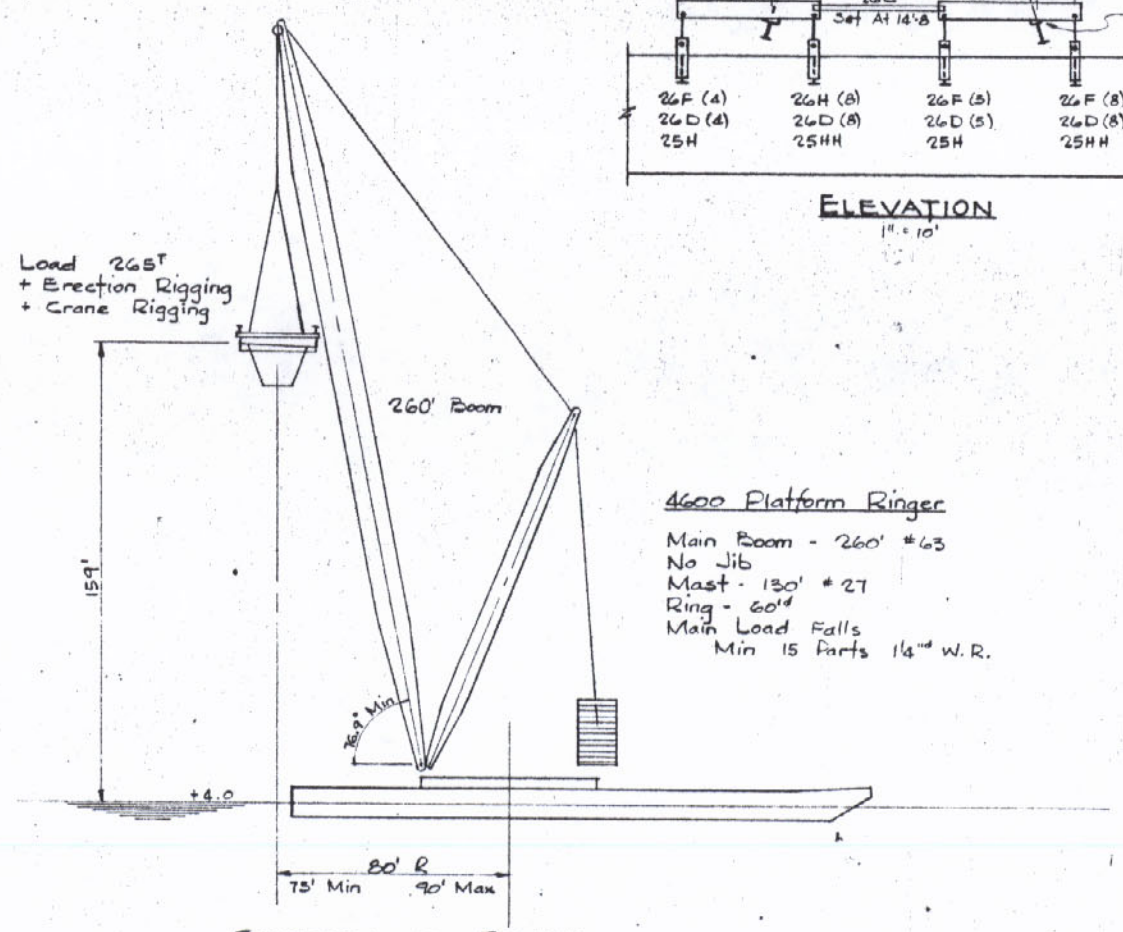

SECTION AT CRANE

1" = 30'

4600 Platform Ringer

Main Boom - 260' #63
No Jib
Mast - 130' #27
Ring - 60'
Main Load Falls
Min 15 Parts 1¼" W.R.

APPROVED
LOUIS A. GARRIDO
BRIDGE DESIGN ENGINEER
BY REB DATE JAN 29 1980

APPROVED
For Design, Material & Workmanship
Frankland & Lienhard
By E.S. 1-25-1980

Erection Procedure Stage 2N
See HNTB Dwg EP12

Typical Rigging - Dwg 24
Rigging Details - Dwgs 25 & 26

RECEIVED
DEC 10 1979

REVISIONS	DATE
Add Rev Ref to Brkt Notes	10/4/79
Add Erect. Note	10/1/79
Chr Review	8/24/79

GIRDER ERECTION - SPAN 5M

LOUISIANA DOT PROJECT #450-37-02
ST CHARLES PARISH LULING, LA

THE MELBOURNE BROS. CONSTRUCTION CO.
NORTH CANTON OHIO

JOB NO 1429 DATE 7/2-/79

SHEET NO 20

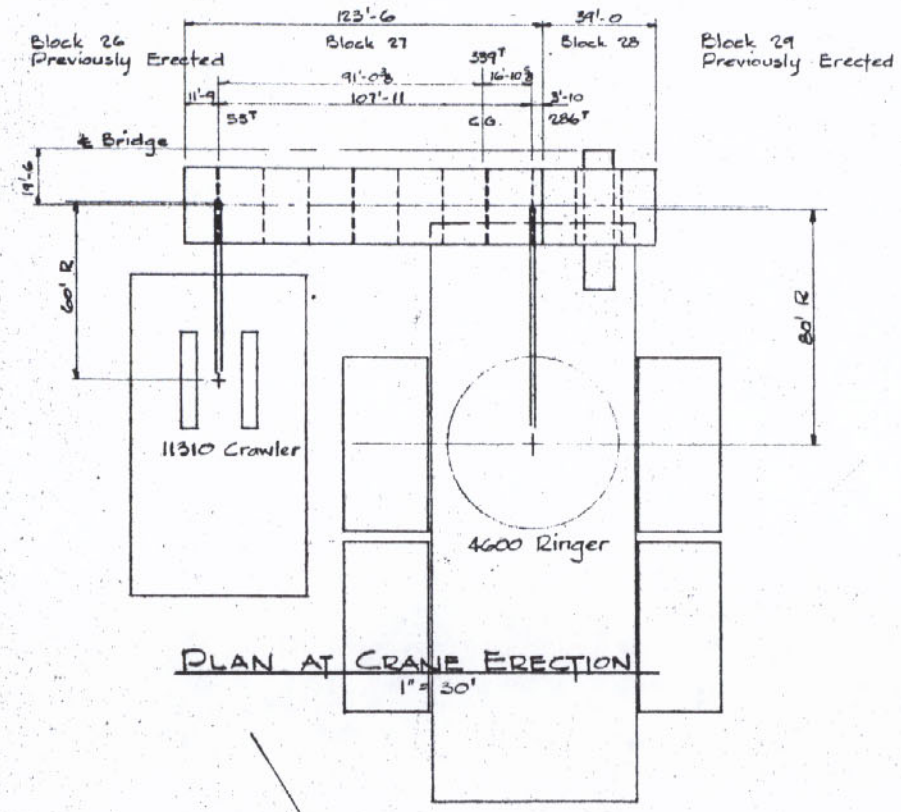

PLAN AT CRANE ERECTION
1" = 30'

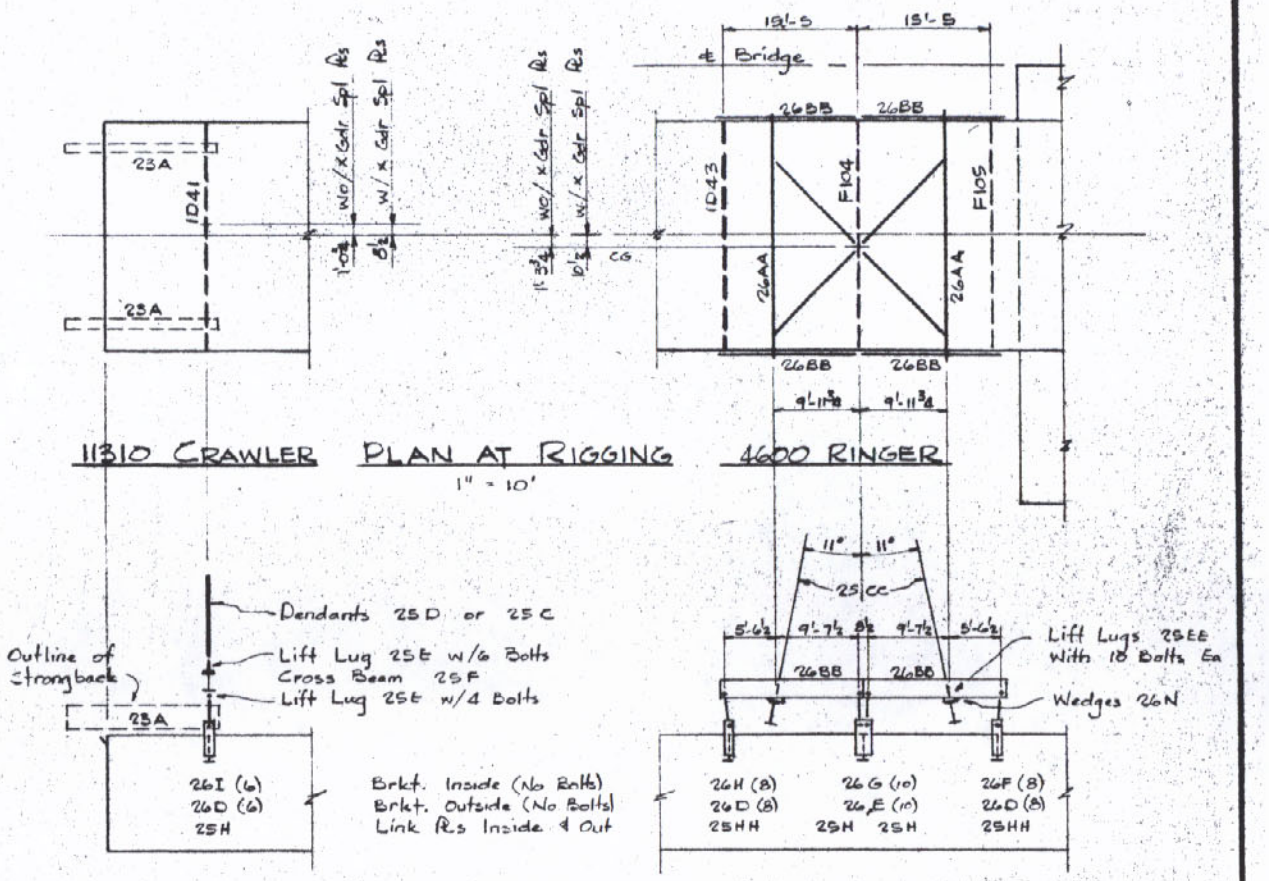

11310 CRAWLER PLAN AT RIGGING 4600 RINGER
1" = 10'

ELEVATION

Note- Cranes are to release their loads at the same time. The 4600 Ringer can not release its load first.

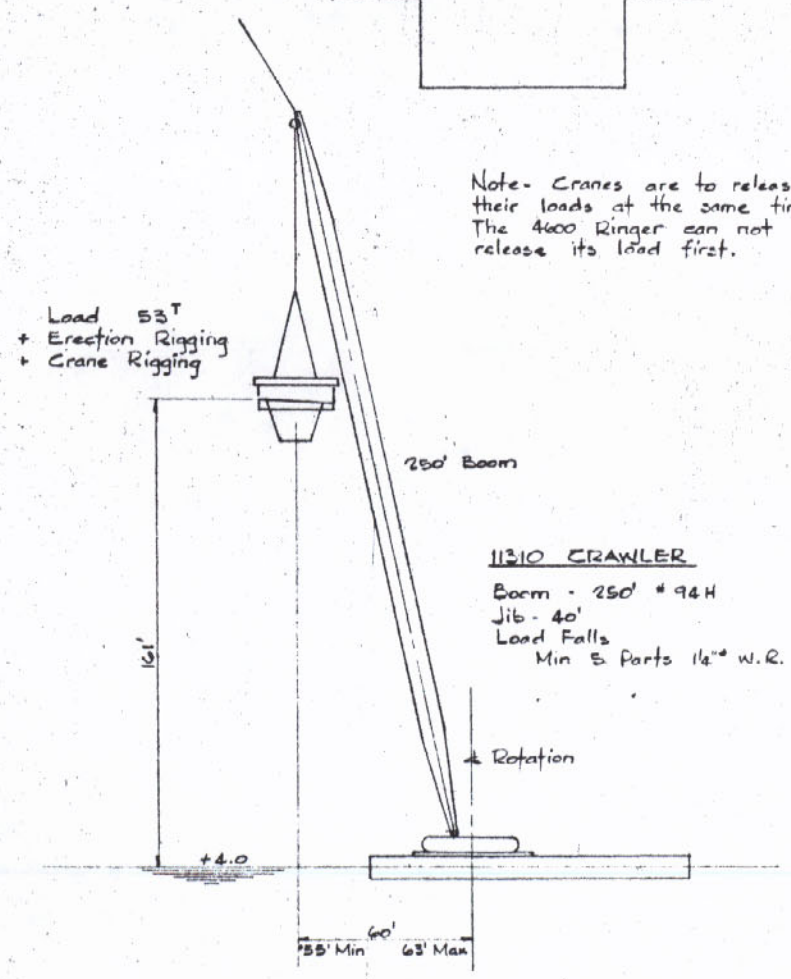

11310 CRAWLER

Boom - 250' #94H
Jib - 40'
Load Falls
Min 5 Parts 1¼" W.R.

SECTION AT CRAWLER CRANE
1" = 30'

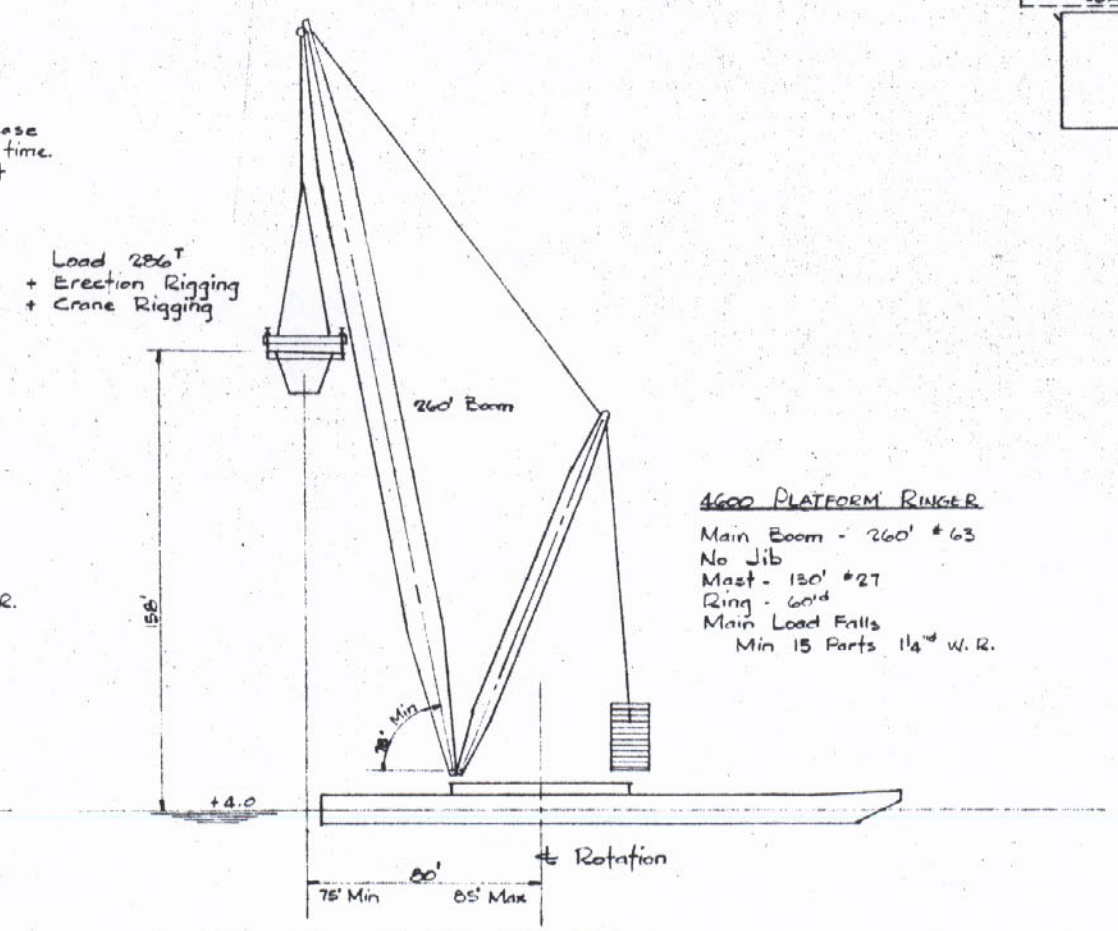

4600 PLATFORM RINGER

Main Boom - 260' #63
No Jib
Mast - 130' #27
Ring - 60'd
Main Load Falls
Min 15 Parts 1¼" W.R.

SECTION AT RINGER CRANE
1" = 30'

APPROVED
LOUIS A. GARRIDO
BRIDGE DESIGN ENGINEER
By RFB Date DEC 27 1979

Typical Rigging - Dwg 24
Rigging Details - Dwgs 25 & 26

Erection Procedure Stage 7N
HNTB Dwg EP 13

GIRDER BLOCKS 27 & 28

Ref EP Dwg	11/21/79	DATE
For Review	8/21/79	REVISIONS

GIRDER ERECTION - SPAN 4M
LOUISIANA DOT PROJECT #450-37-06
ST CHARLES PARISH LULING, LA
THE MELBOURNE BROS. CONSTRUCTION CO.
NORTH CANTON OHIO
JOB NO 1429 DATE 7/20/79
SHEET NO 21 OF

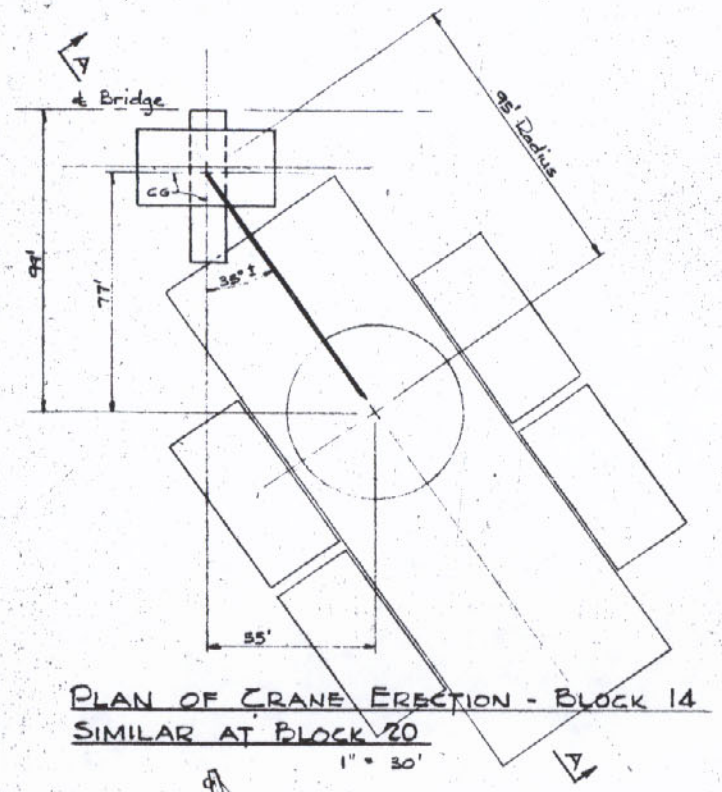

PLAN OF CRANE ERECTION - BLOCK 14
SIMILAR AT BLOCK 20
1" = 30'

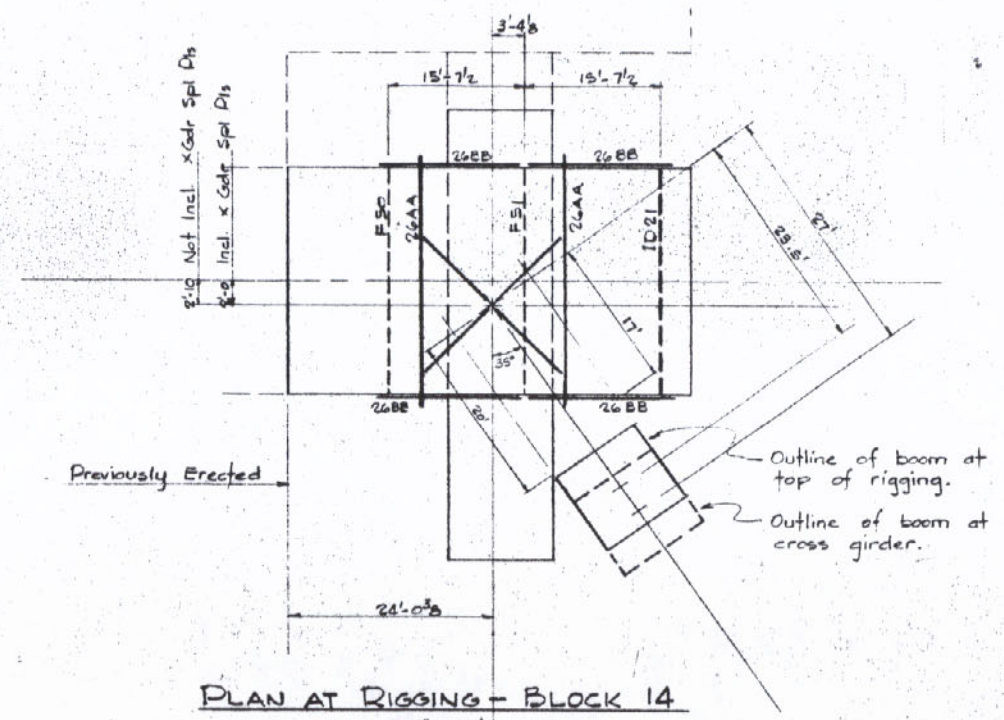

PLAN AT RIGGING - BLOCK 14
1" = 10'

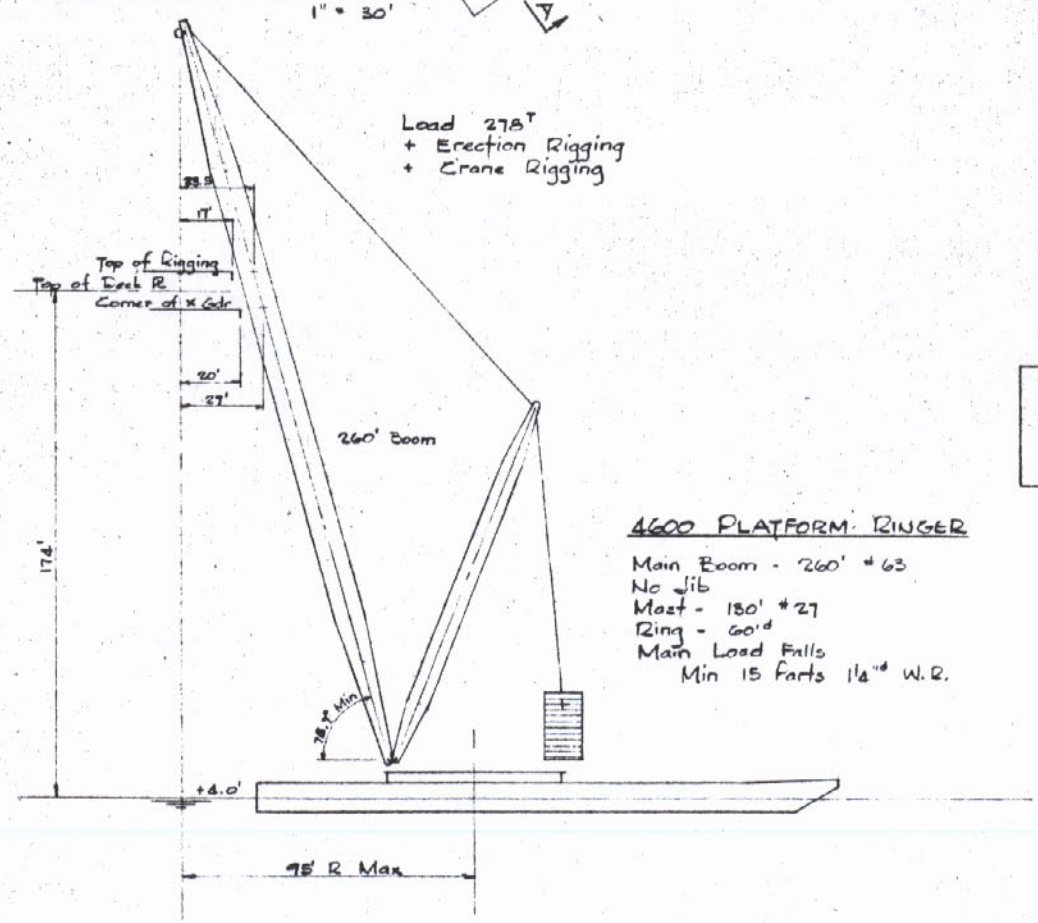

SECTION A-A - BLOCK 14
1" = 30'

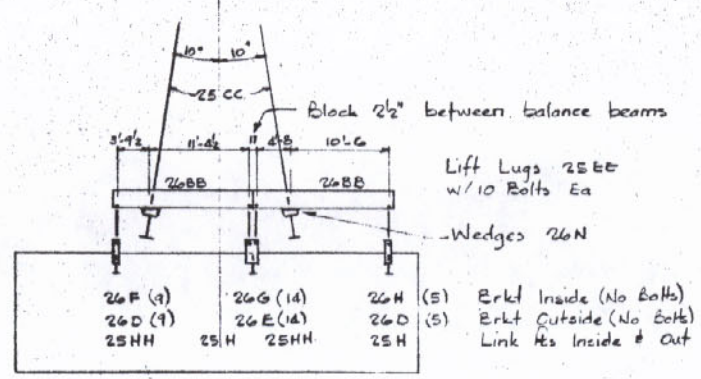

ELEVATION

4600 PLATFORM RINGER

Main Boom - 260' #63
No Jib
Mast - 180' #27
Ring - 60'd
Main Load Falls
Min 15 Parts 1¼"d W.R.

Erection Procedure Reference
Block 14 - HNTB Dwg EP15, Stage 12S
Block 20 - HNTB Dwg EP13, Stage 8N

Typical Rigging - Dwg 24
Rigging Details - Dwgs 25 & 26

Layout and clearances shown are based on water level at + 4.

APPROVED
LOUIS A. GARRIDO
BRIDGE DESIGN ENGINEER
DEC 27 1979
By REB Date

BLOCKS 14 & 20

Ref EP Dwg	1-21-79	DATE
For Revised	8-30-79	REVISIONS

GIRDER ERECTION - SPAN 3M
LOUISIANA DOT PROJECT #450-37-02
ST CHARLES PARISH LULING, LA

THE MELBOURNE BROS. CONSTRUCTION CO.
NORTH CANTON OHIO

JOB NO. 1429 DATE 8-2-79

SHEET NO 22 OF

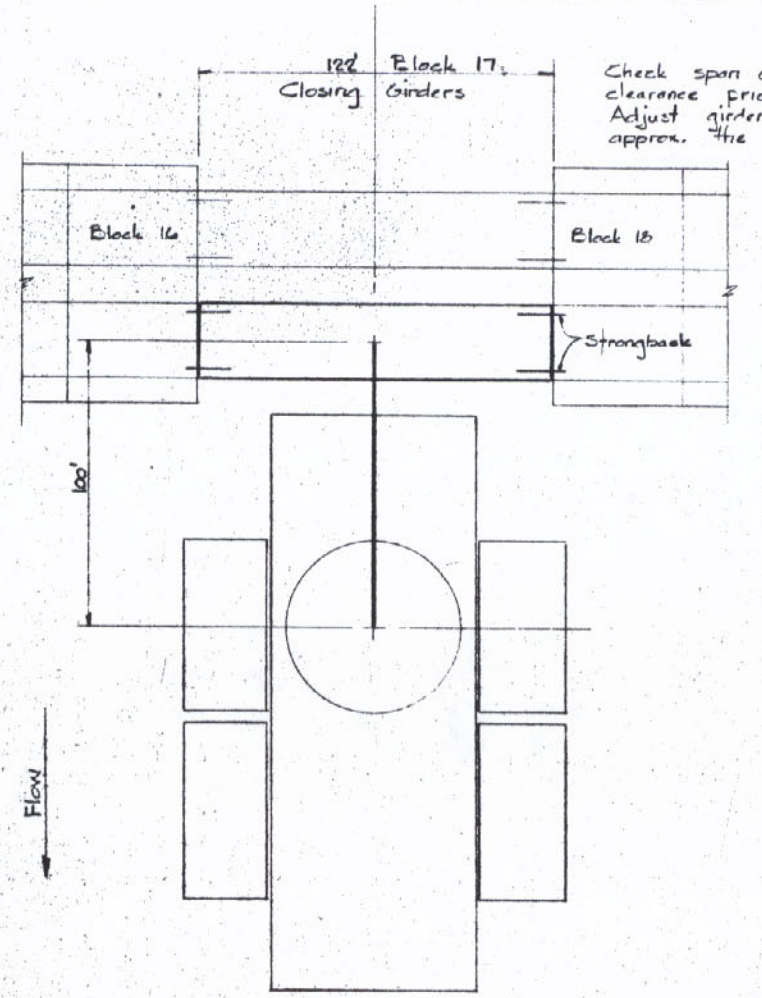

Check span opening for clearance prior to erection. Adjust girders 16 & 18 to approx. the same elevations.

PLAN AT CRANE ERECTION
CLOSING GIRDERS - BLOCK 17
1" = 30'

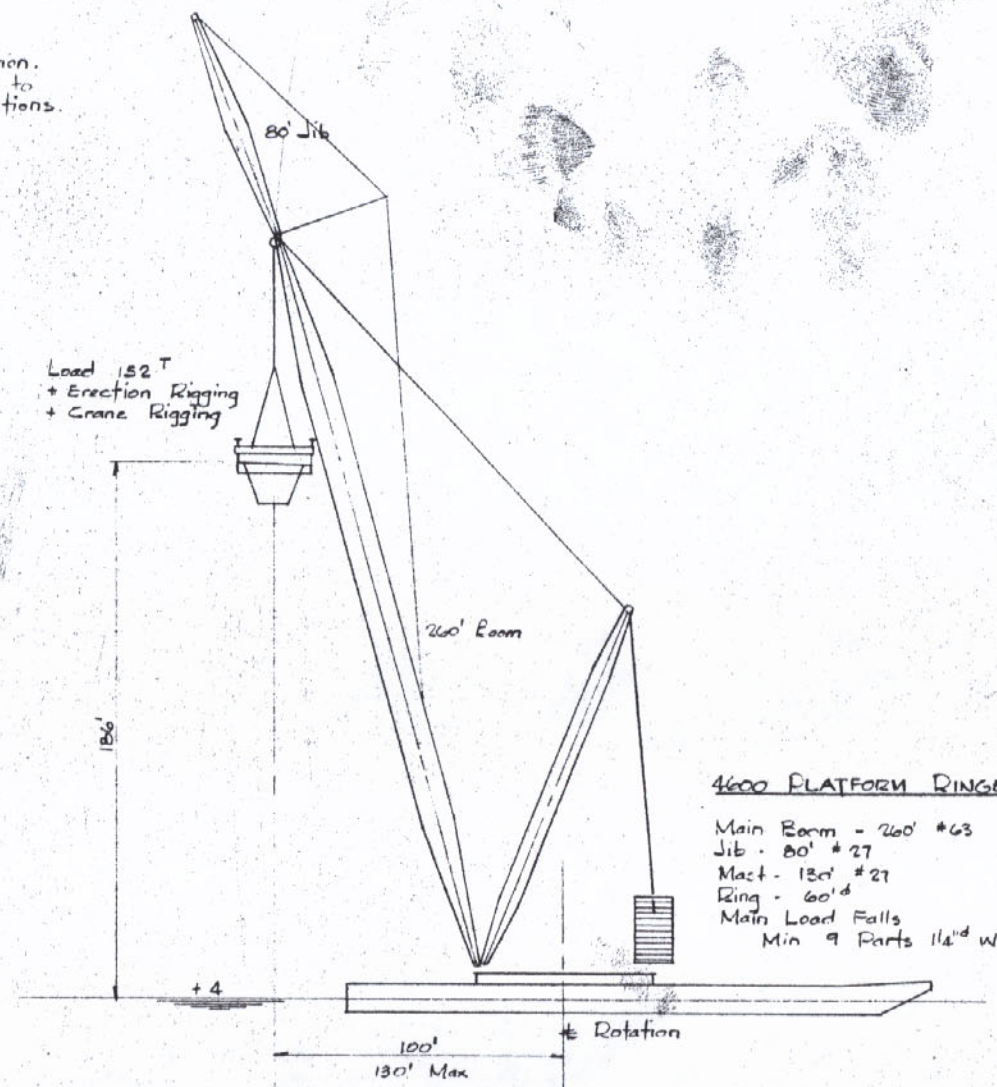

SECTION AT CRANE
1" = 30'

4600 PLATFORM RINGER

Main Boom - 260' #63
Jib - 80' #27
Mast - 130' #27
Ring - 60' d
Main Load Falls
Min 9 Parts 1 1/4" W.R.

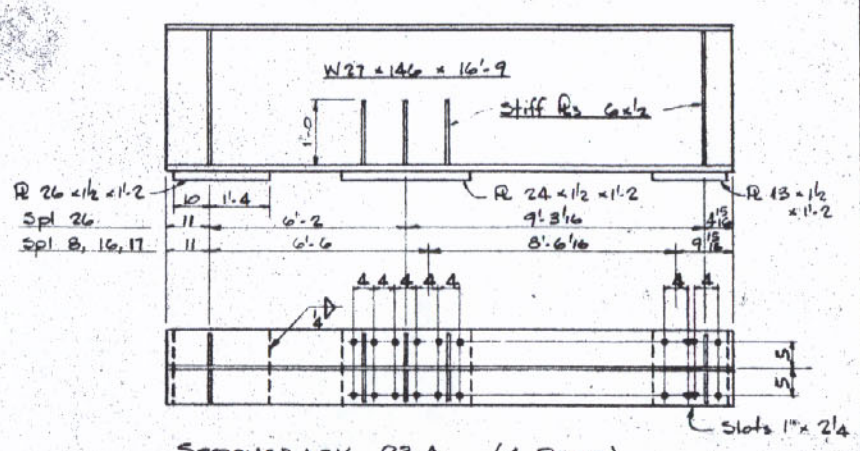

STRONGBACK 23A (4 REQ'D)

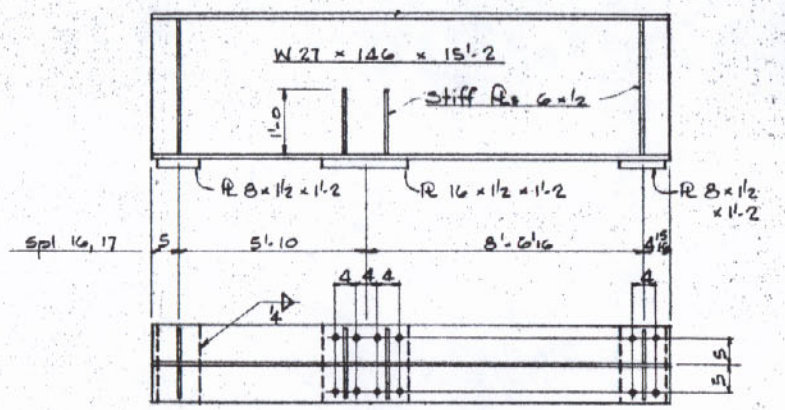

STRONGBACK 23B (4 REQ'D)

Strongbacks - A36
Open Holes - 1 1/16"

Closure Notes

Girders will temporarily be supported by strongbacks.
Span will not be closed until both girders are erected.
Release temporary fix at Pier 3 when bolting and pinning is started.
Strongbacks will not be removed until bolting and pinning is sufficient for support at any given point.

RECEIVED
LOUIS A GARRIDO
BRIDGE DESIGN ENGINEER
DEC 27 1979
By R.E.B.

Reference Closure Procedure
HNTB Dwg EP16

Typical Rigging - Dwg 24
Rigging Details - Dwgs 25 & 26

CLOSING AT BLOCK 17

REVISIONS	DATE
Ref. EP Dwg	11/21/79
For Review	8/31/79

GIRDER ERECTION - SPAN 3M
LOUISIANA DOT PROJECT # 450-37-02
ST CHARLES PARISH LULING, LA

THE MELBOURNE BROS. CONSTRUCTION CO.
NORTH CANTON OHIO
JOB NO 1429 DATE 5-20-79
SHEET NO. 23 OF

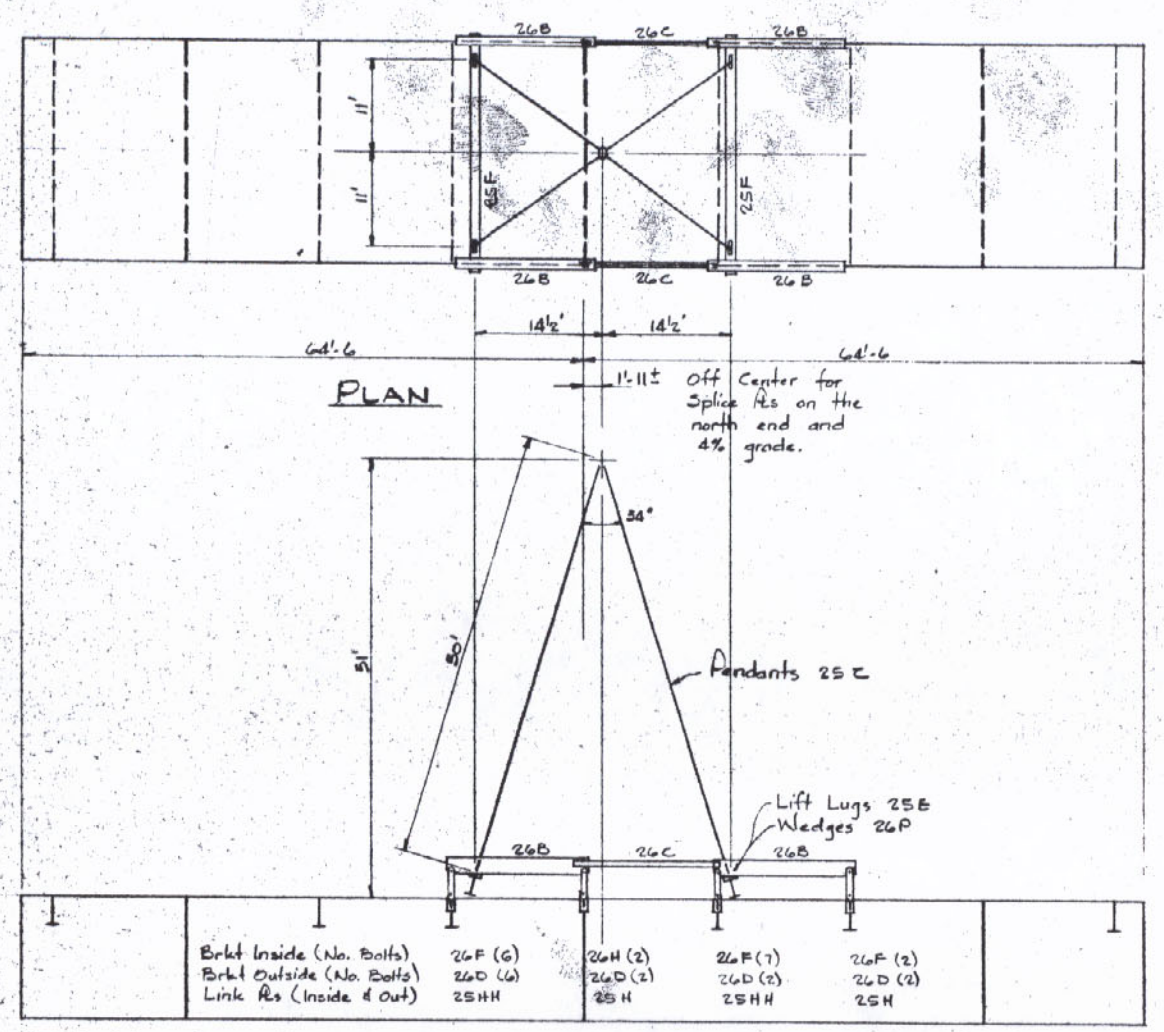

PLAN

ELEVATION AT BOX GIRDERS - BLOCK 5

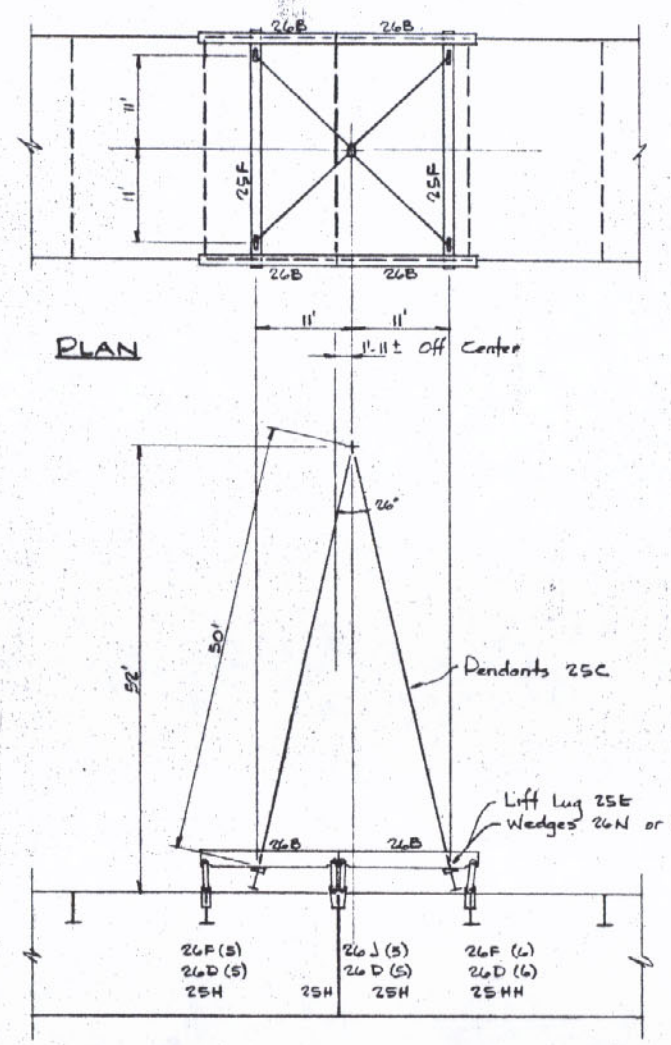

PLAN

ELEVATION AT BOX GIRDERS - BLOCK 5
ALTERNATE ERECTION RIGGING

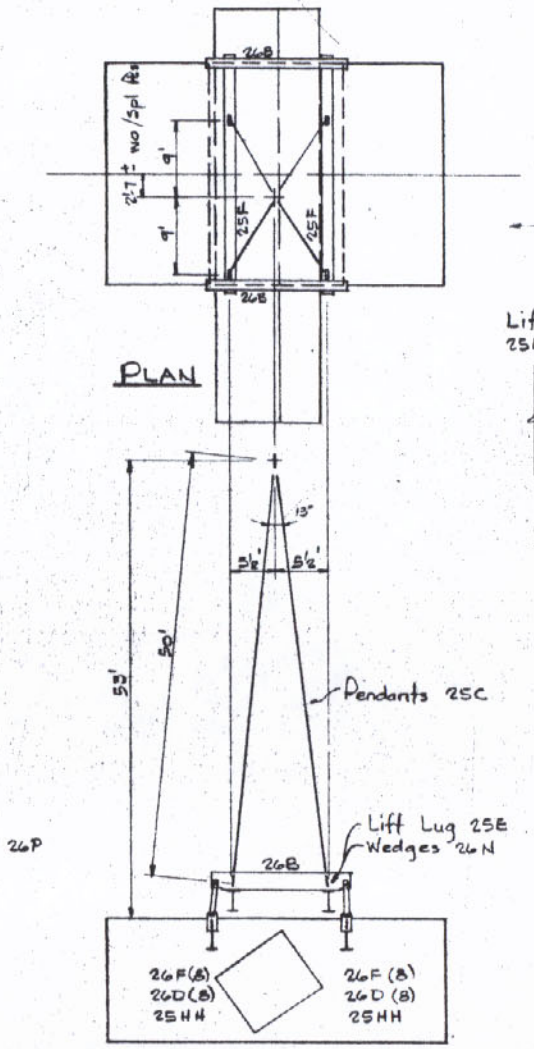

PLAN

ELEVATION AT BLOCK 6

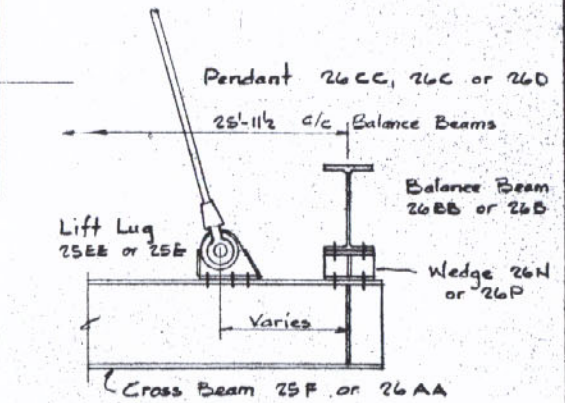

RIGGING DETAILS
SECTION AT CROSS BEAM

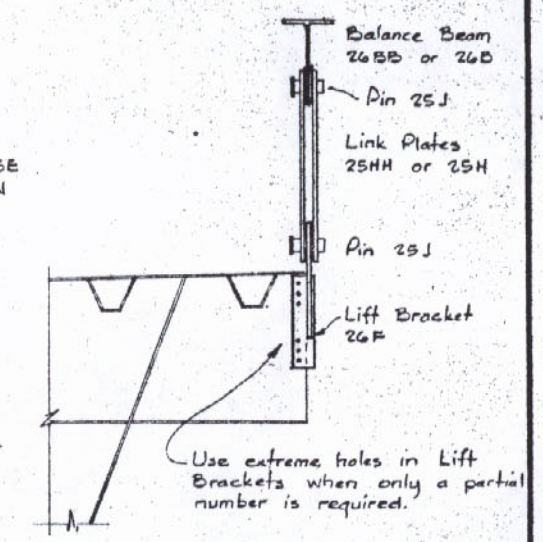

RIGGING AT GIRDER
PICKING POINT

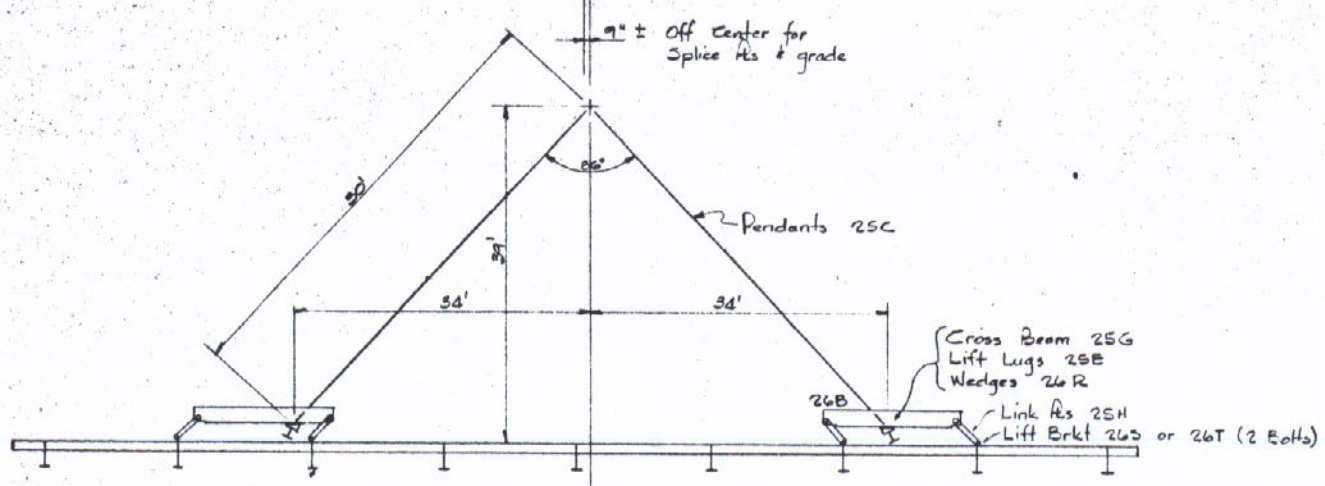

ELEVATION AT CENTER OR SIDE SECTIONS - BLOCK 5

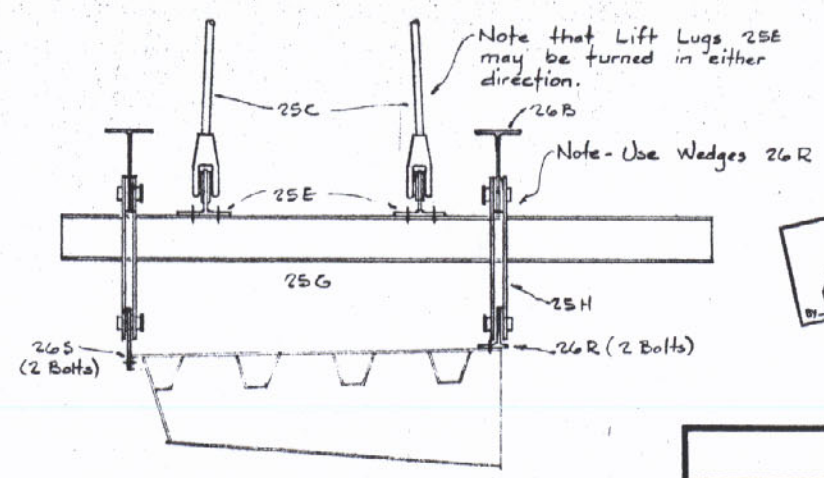

SECTION AT RIGGING FOR SIDE DECKS
SIMILAR FOR CENTER DECKS

APPROVED
LOUIS A. GARRIDO
BRIDGE DESIGN ENGINEER
DEC 27 1979
BY REB DATE

Rigging details on dwgs 25 & 26

This dwg shown as an example. Dimensions shown are not exact.

REVISIONS	DATE
Note for Lift Lug & Lift Brackets	11/6/79
For Review	8/21/79

GIRDER ERECTION RIGGING
TYPICAL ARRANGEMENT
LOUISIANA DOT PROJECT #450-37-02
ST CHARLES PARISH LULING, LA

THE MELBOURNE BROS. CONSTRUCTION CO.
NORTH CANTON OHIO

JOB NO 1429 DATE 12-22-79

SHEET NO 24 OF

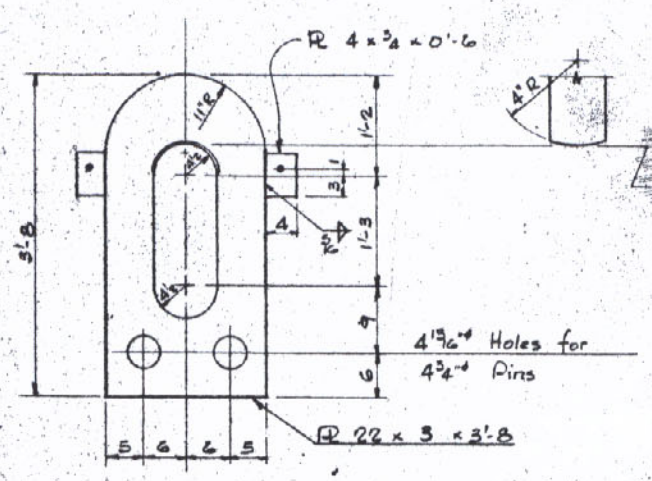

HOOK PLATE 25AA

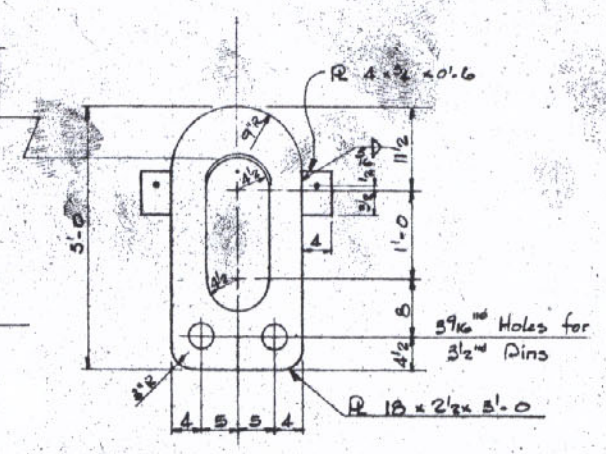

HOOK PLATE 25A

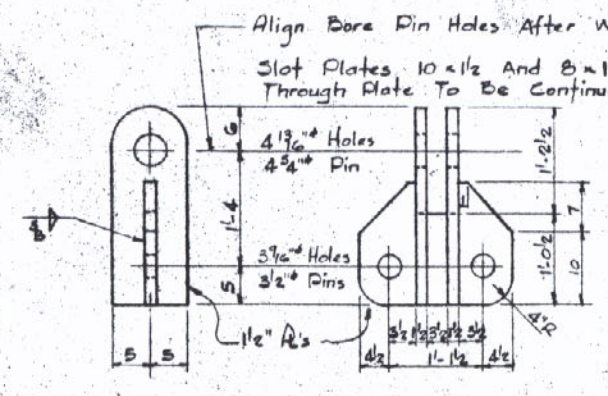

25 BB

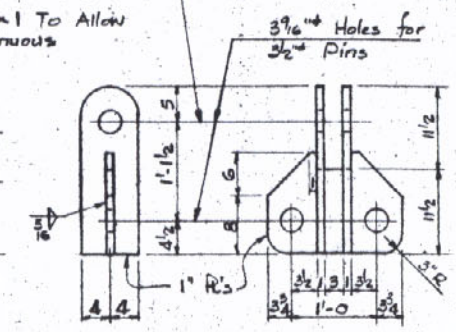

25 B

HOOK PLATE ADAPTERS

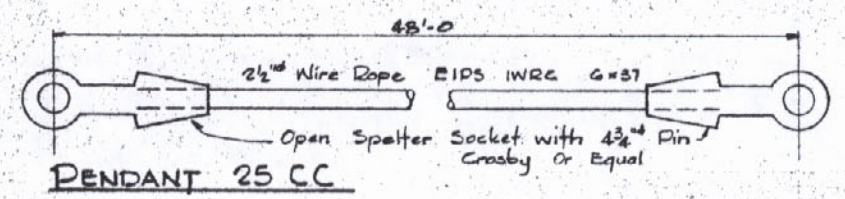

PENDANT 25 CC

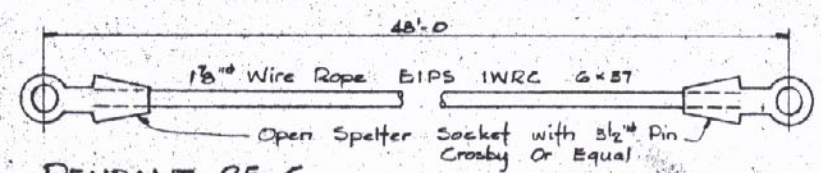

PENDANT 25 C

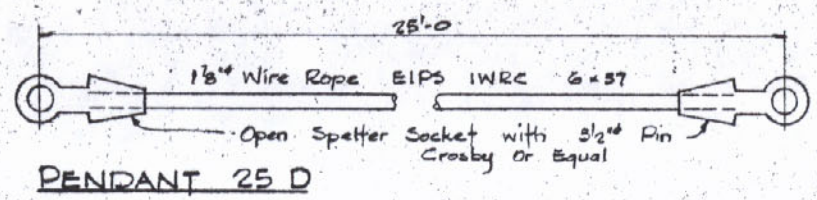

PENDANT 25 D

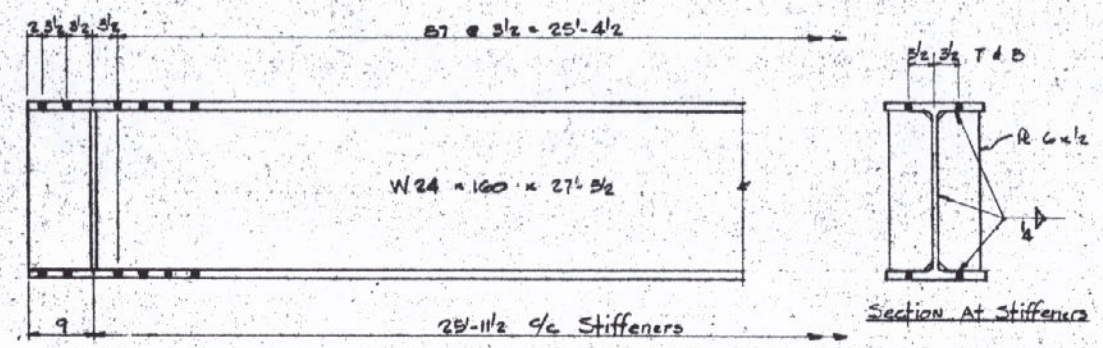

Section At Stiffeners

CROSS BEAM 25F

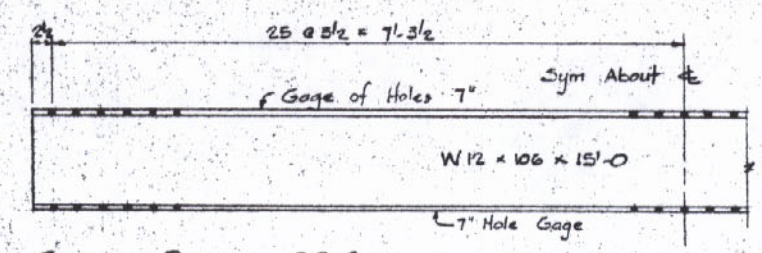

CROSS BEAM 25G

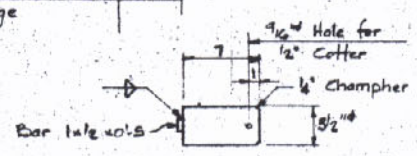

ASTM A668 Class G Or Equal

PIN 25 J

1/2" = 1'-0

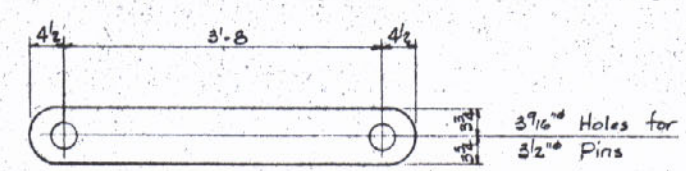

PL 7 1/2 x 1 1/4 x 4'-5 For 25 HH
PL 7 1/2 x 3/4 x 4'-5 For 25 H

LINK PLATE 25 HH
LINK PLATE 25 H

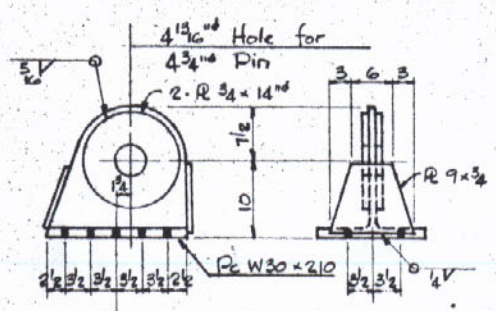

LIFT LUG 25 EE

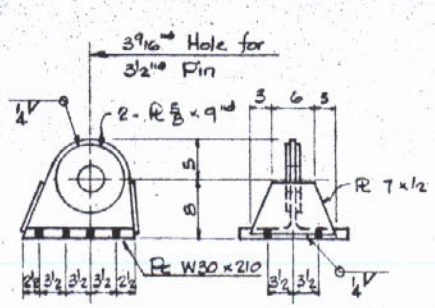

LIFT LUG 25 E

MATERIAL LIST

Piece No	No Req'd	Cap (Tons)	Wt Ea	Remarks
25AA	2	160	600#	
25A	2	90	300	
25BB	2	90	350	
25B	2	50	150	
25CC	4	80	1050	
25C	4	45	480	
25D	4	45	330	
25EE	4	Varies	270	Depends On No. of Bolts And Thick. of Connecting PL
25E	8	Varies	170	Depends On No. of Bolts And Thick. of Connecting PL
25F	2	—	4200	
25G	2	—	1600	
25HH	8	60 Per Pair	130	
25H	16	35 Per Pair	80	
25J	18	100 Double Shear	20	May Sub 3 1/2" Pins by Crosby Used for Sockets

NOTES

Material - A36 Except As Noted
Open Holes - 1 1/16" U.N.
All Rigging Materials Require Certificates of Tests From Mill Reports.
Piece Marks With Double Letters Identifies With Heavier Rigging
Piece Marks With Single Letters Identifies " With Lighter Rigging
Wire Rope Pendants 25CC Are To Be Proof Tested With 125 Tons Load.
Wire Rope Pendants 25C And 25D Are To Be Proof Tested With 70 Tons Load
Weld - E70xx
Paint - One Shop Coat of Red Lead

APPROVED
For Design, Material & Workmanship
Frankland & Lienhard
By E. S. 8-7-79
FRANKLAND & LIENHARD
CONSULTING ENGINEERS

APPROVED
FOR SIZE OF MATERIAL AND STRENGTH OF CONNECTIONS
BRIDGE DESIGN SECTION
LOUISIANA DEPARTMENT OF HIGHWAYS BRIDGE DESIGN ENGINEER
By REB Date AUG 8 1979

Scale 1" = 1'-0 U.N.

For Review	6/6/79	DATE
For Fab'n	5/30/79	REVISIONS

ERECTION RIGGING DETAILS
LOUISIANA DOT PROJECT # 450-37-02
ST CHARLES PARISH LULING, LA
THE MELBOURNE BROS. CONSTRUCTION CO.
NORTH CANTON OHIO
SHEET NO. 25 Cadrawing

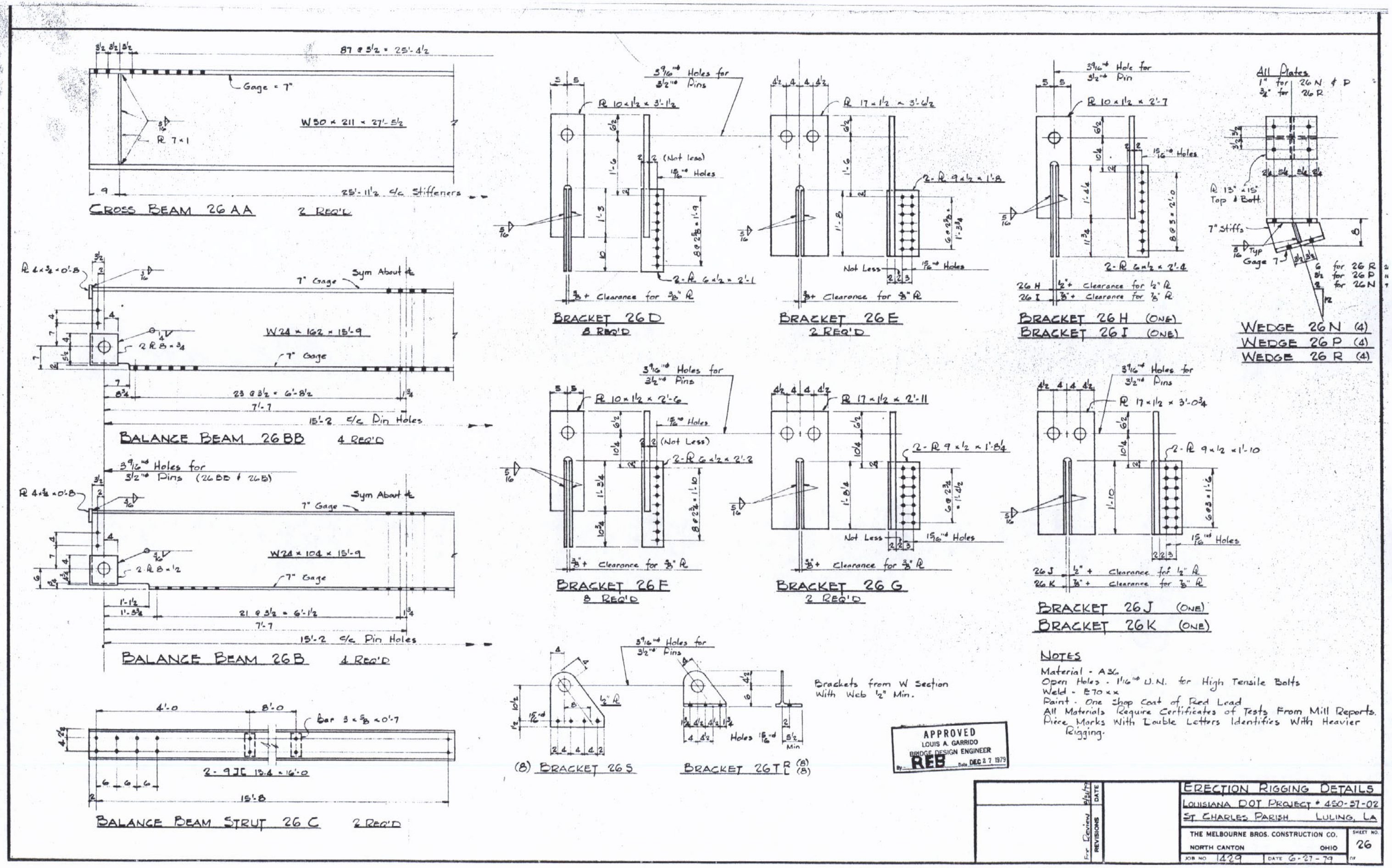

NOTES

Material - A36
Open Holes - 1 1/16" D.N. for High Tensile Bolts
Weld - E70xx
Paint - One Shop Coat of Red Lead
All Materials Require Certificates of Tests From Mill Reports.
Piece Marks With Double Letters Identifies With Heavier Rigging.

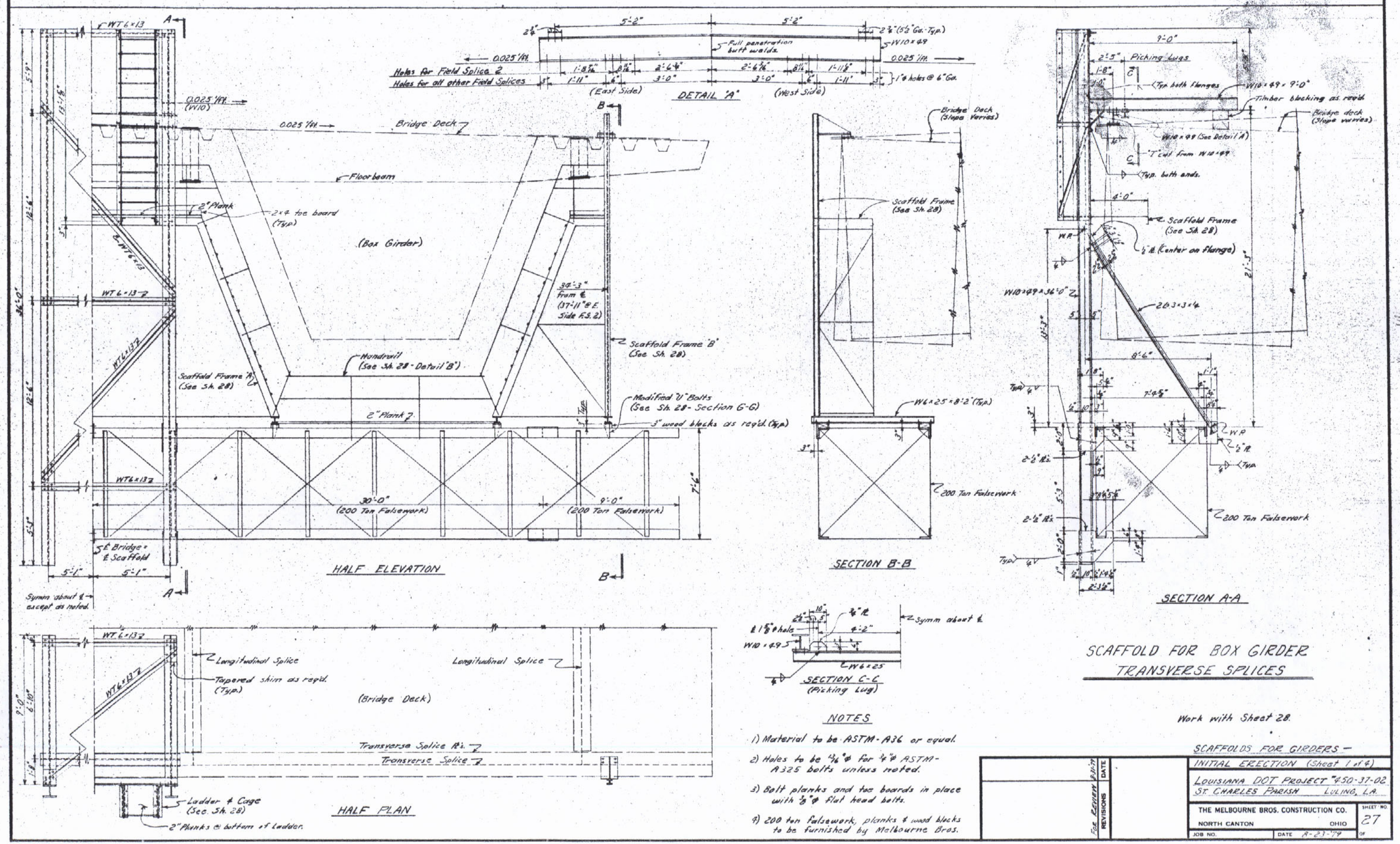

NOTES

1) Material to be ASTM-A36 or equal.

2) Holes to be 13/16" ϕ for ¾" ϕ ASTM-A325 bolts unless noted.

3) Bolt planks and toe boards in place with ⅜" ϕ flat head bolts.

4) 200 ton falsework, planks & wood blocks to be furnished by Melbourne Bros.

SCAFFOLD FOR BOX GIRDER TRANSVERSE SPLICES

Work with Sheet 28.

SCAFFOLDS FOR GIRDERS —

For Review 8-23-79	DATE	INITIAL ERECTION (Sheet 1 of 4)
	REVISIONS	LOUISIANA DOT PROJECT #50-37-02 ST. CHARLES PARISH LULING, LA.
		THE MELBOURNE BROS. CONSTRUCTION CO. NORTH CANTON OHIO
		JOB NO. DATE 8-23-79 SHEET NO. 27 OF

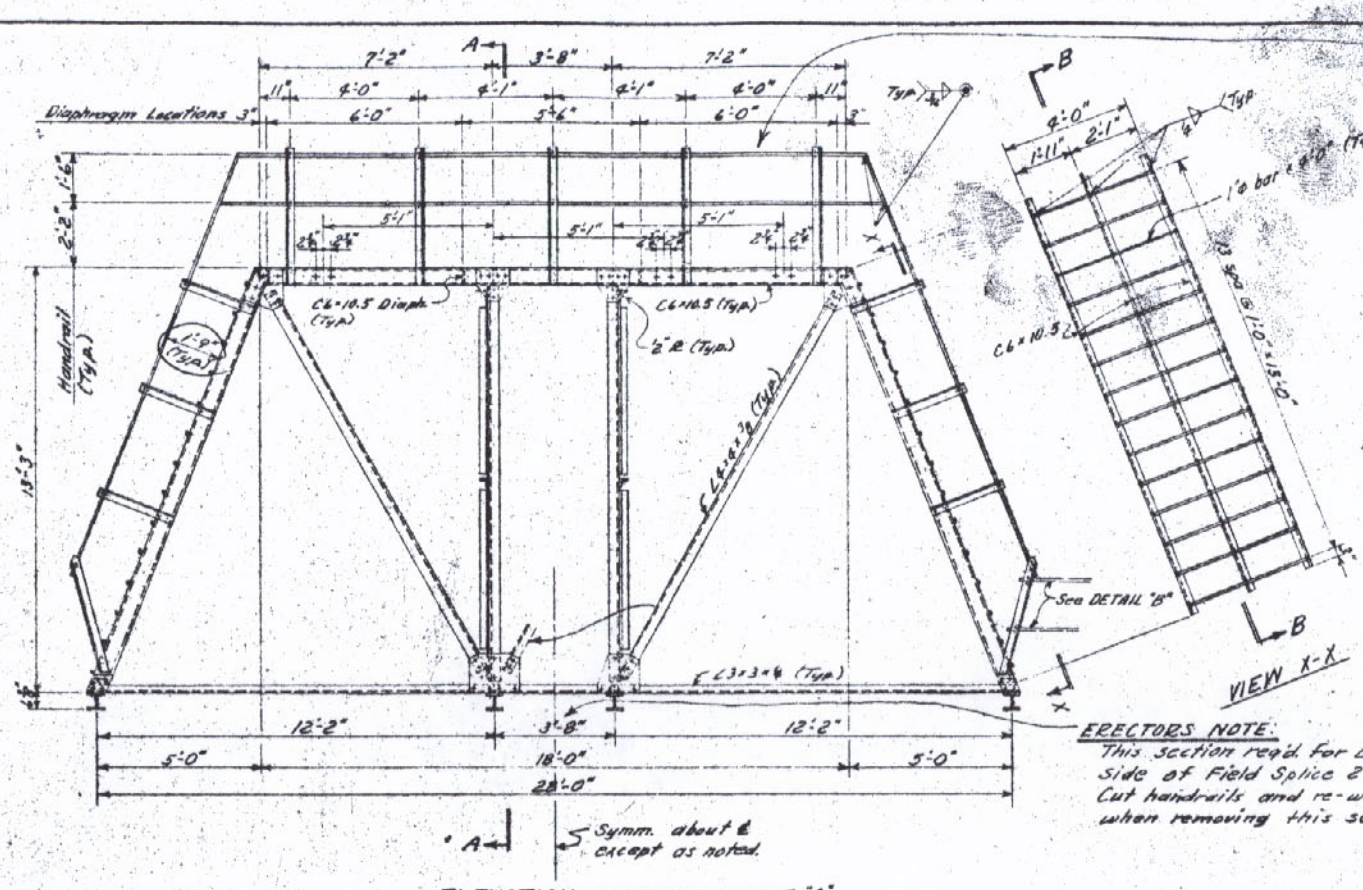

ELEVATION - SCAFFOLD FRAME "A"
(1 Req'd)

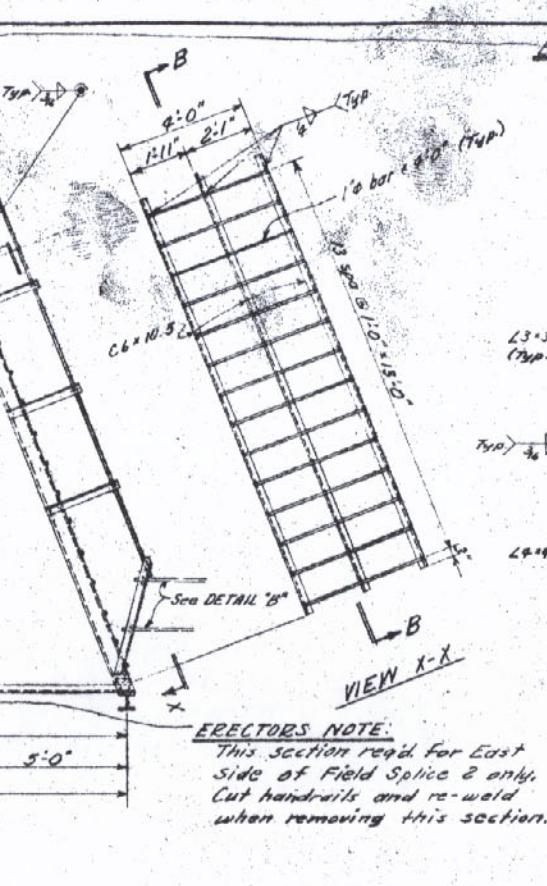

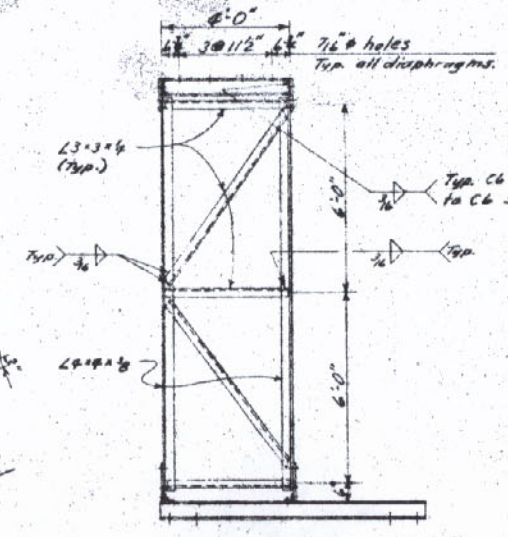

SECTION A-A

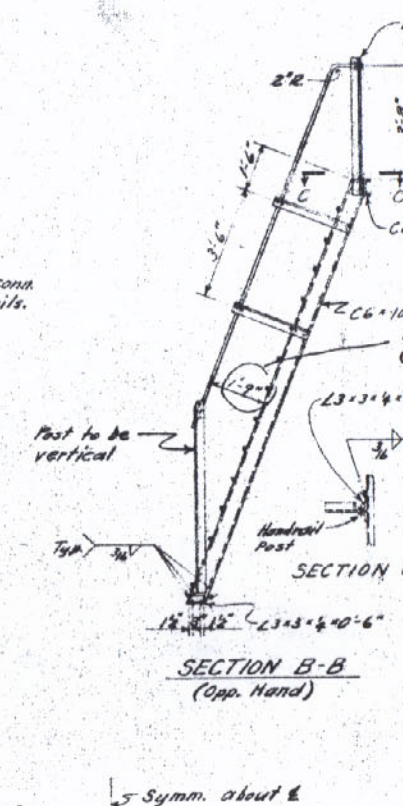

SECTION C-C

SECTION B-B
(Opp. Hand)

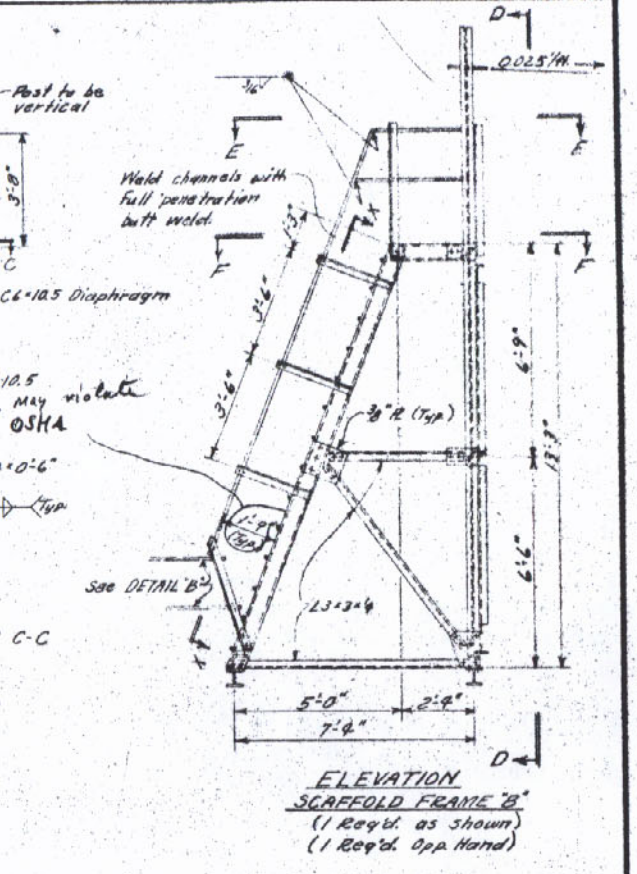

ELEVATION
SCAFFOLD FRAME "B"
(1 Req'd. as shown)
(1 Req'd. Opp. Hand)

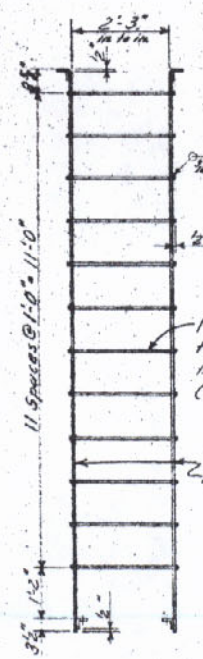

VIEW K-K

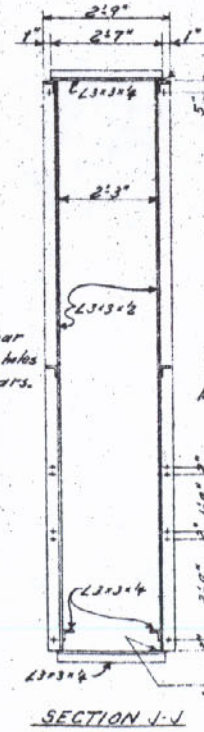

SECTION J-J

LADDER DETAILS
(1 req'd)

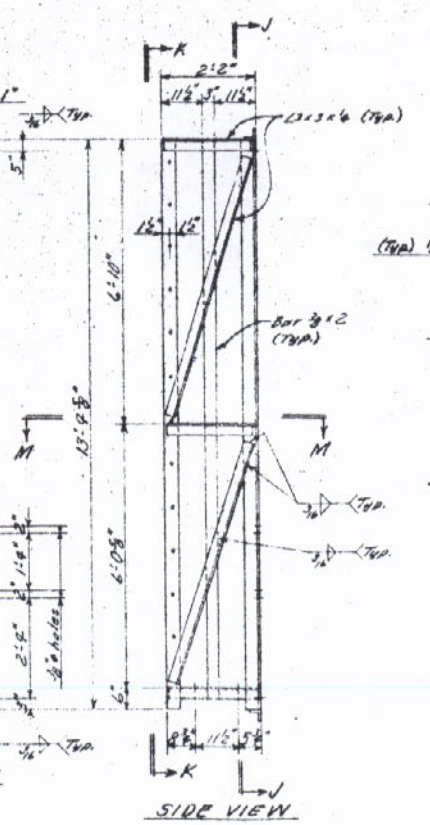

SIDE VIEW

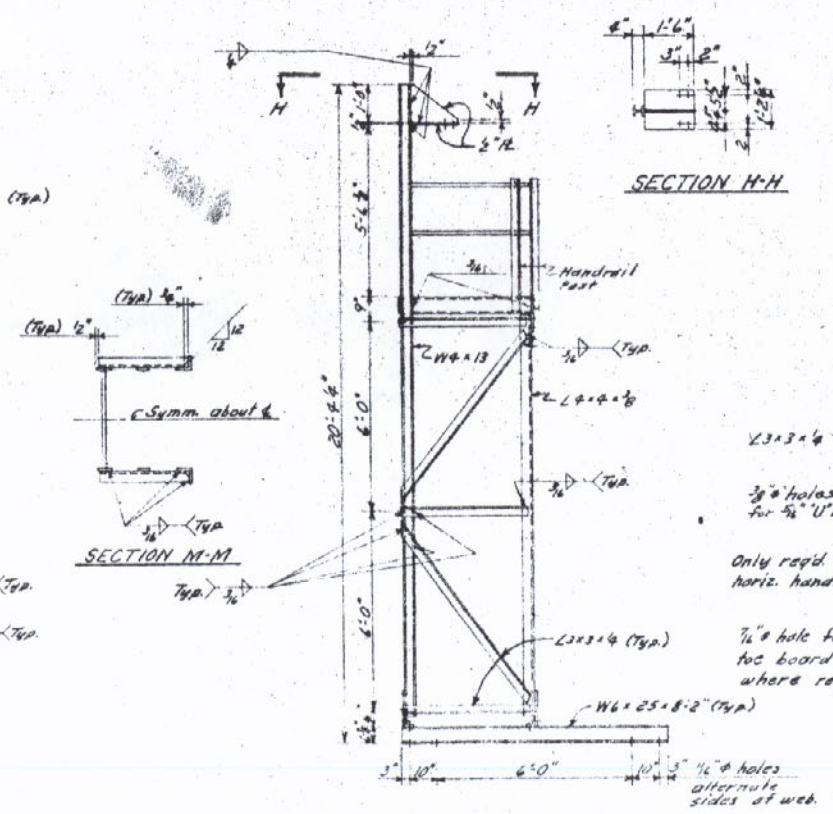

VIEW D-D

SECTION H-H

SECTION M-M

SCAFFOLD FOR BOX GIRDER
TRANSVERSE SPLICES (CON'T.)

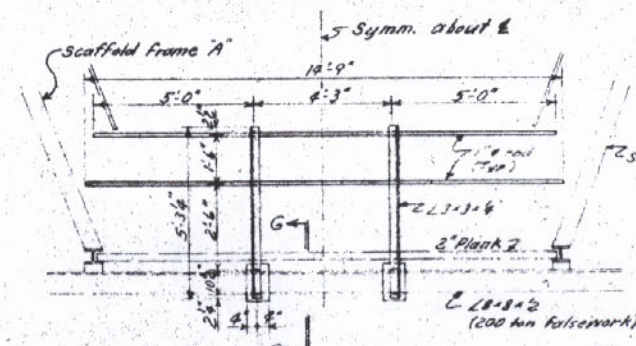

DETAIL "B"

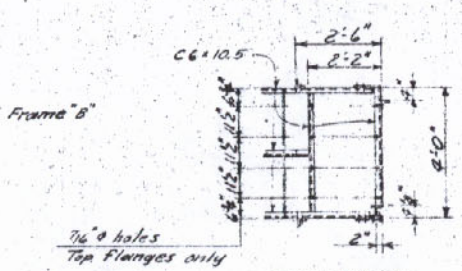

SECTION F-F

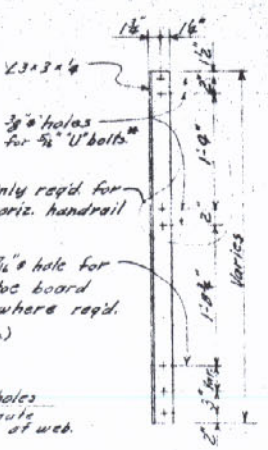

HANDRAIL POST DETAILS
(Typical U.N.)

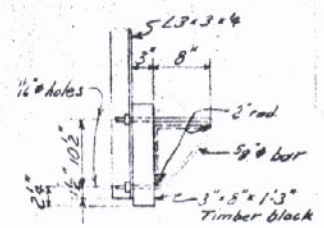

SECTION G-G

*NOTE: Standard muffler clamps may be used for Handrail "U" bolts.

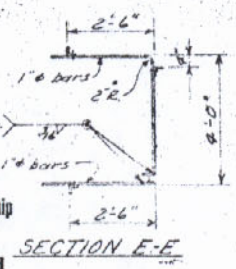

SECTION E-E

APPROVED
For Design, Material & Workmanship
As noted.
Frankland & Lienhard
By: [illegible] 11-8-79

Work with Sheet 27.

RECEIVED
SEP 7 1979

SCAFFOLDS FOR GIRDERS -
INITIAL ERECTION (Sheet 2 of 4)

LOUISIANA DOT PROJECT "450-37-02
ST. CHARLES PARISH LULING, LA.

THE MELBOURNE BROS. CONSTRUCTION CO.
NORTH CANTON OHIO

JOB NO | DATE | SHEET NO 28 OF

FOR REVIEW 8-1-79 | DATE | REVISIONS

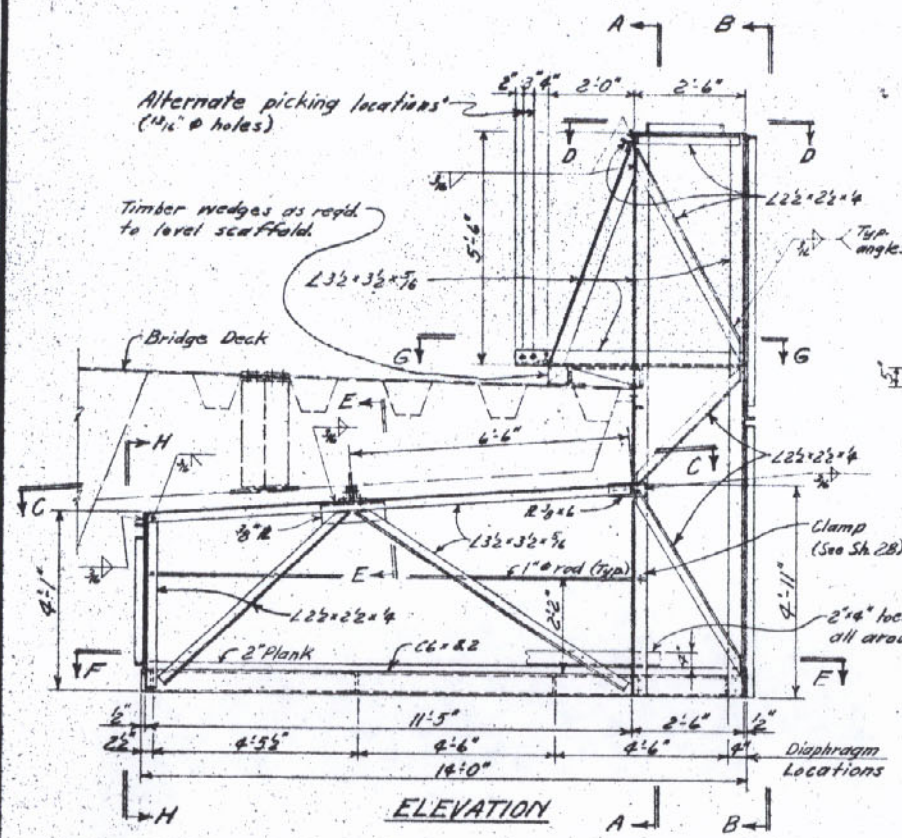

ELEVATION

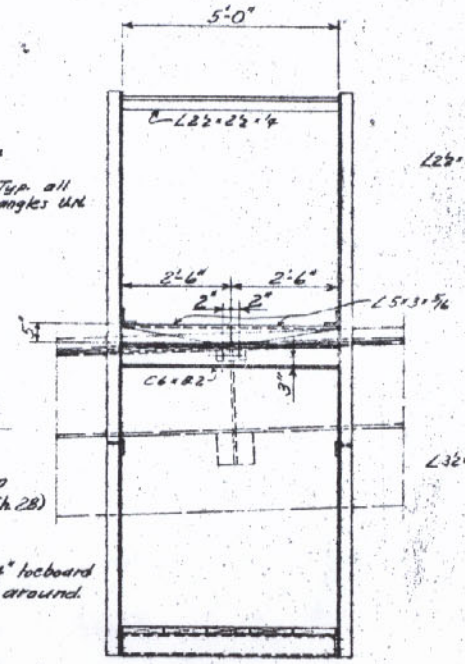

SECTION A-A

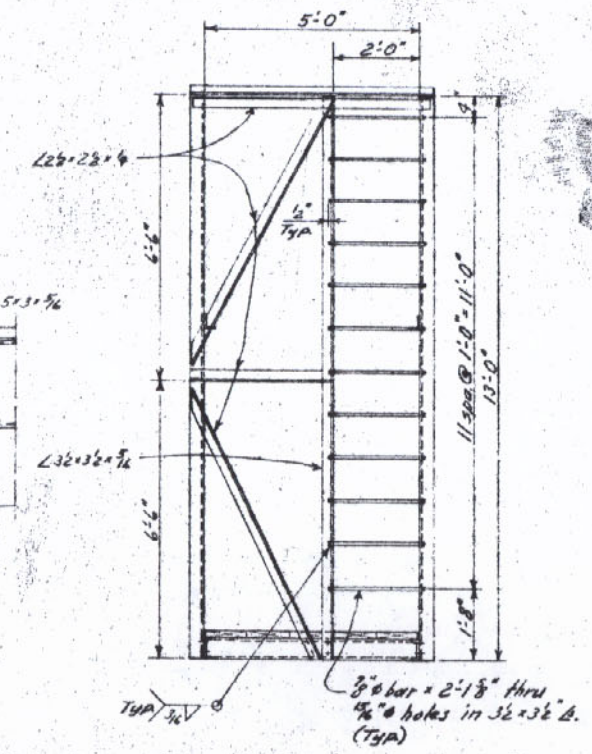

SECTION B-B

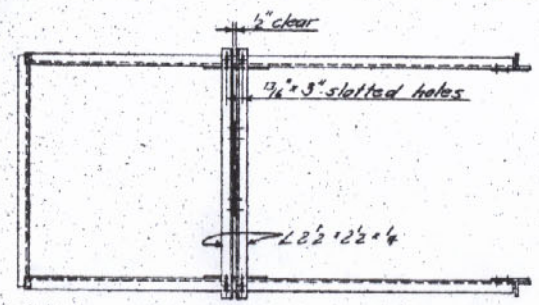

SECTION C-C

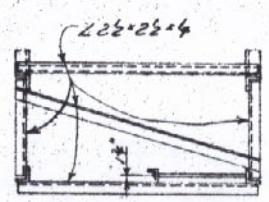

SECTION D-D
(Turned 90°)

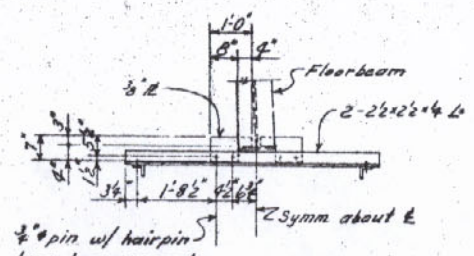

SECTION E-E

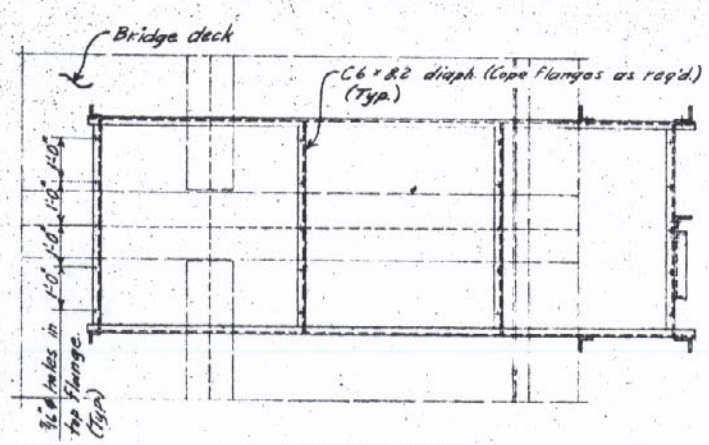

SECTION F-F

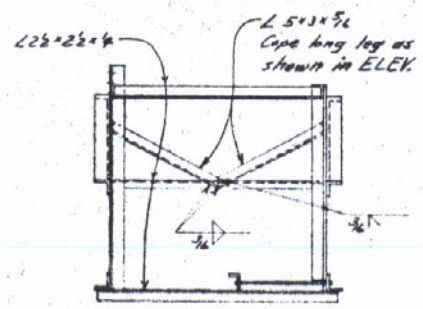

SECTION G-G
(Turned 90°)

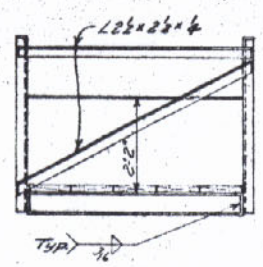

SECTION H-H

ERECTORS NOTE: When removing the scaffold, the clamp shown in Sec. E-E can be released by pulling the pins while standing near the ladder end of the scaffold.

SCAFFOLD FOR SIDE DECK FLOORBEAM SPLICES

See Sheet 27 for "Notes."

FOR REVIEW 8-3-79	DATE	
	REVISIONS	

SCAFFOLDS FOR GIRDERS —
INITIAL ERECTION (Sheet 3 of 7)
LOUISIANA DOT PROJECT #450-37-02
ST. CHARLES PARISH LULING, LA.

THE MELBOURNE BROS. CONSTRUCTION CO.
NORTH CANTON OHIO
JOB NO. DATE 8-28-79
SHEET NO. 29 OF

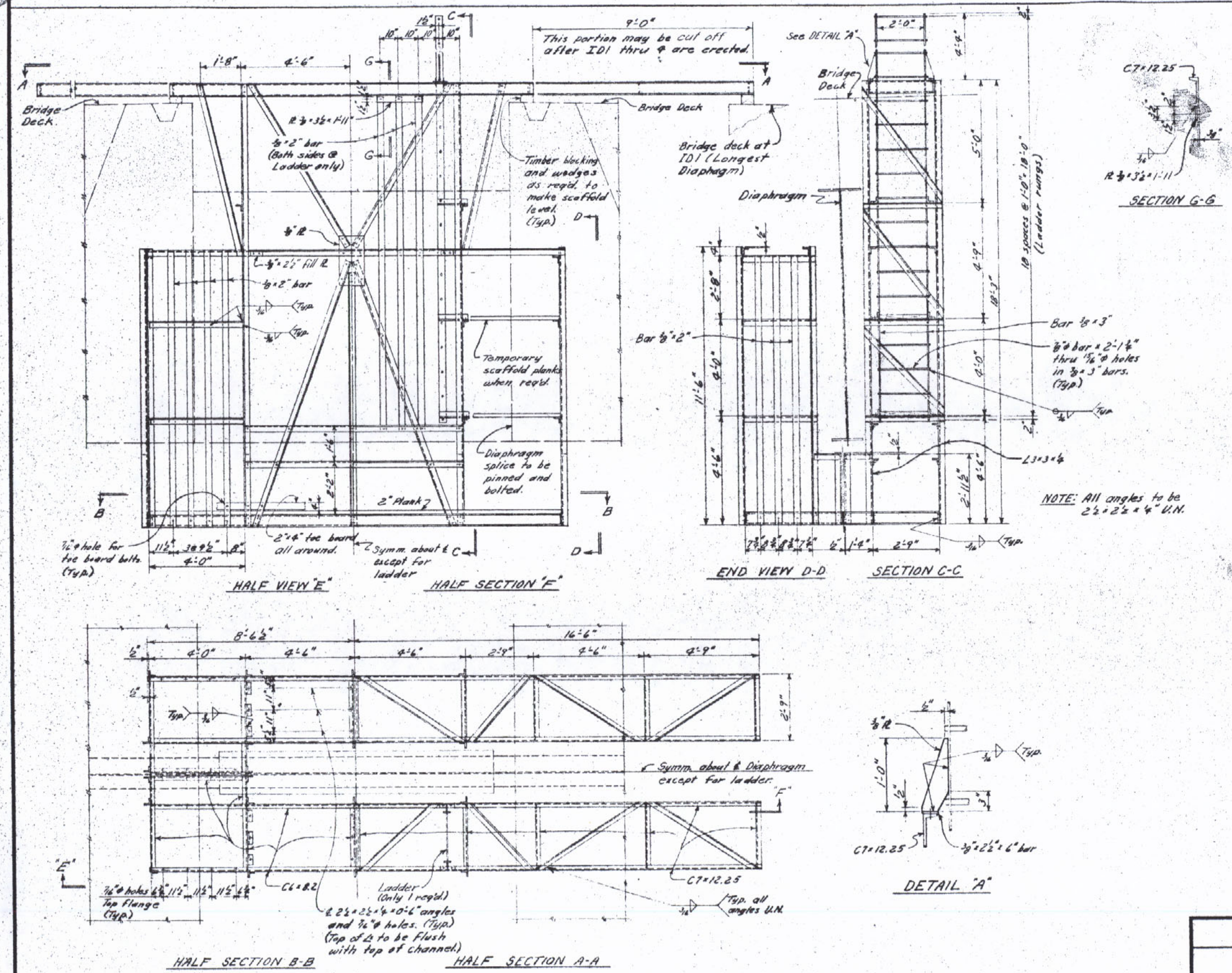

NOTES

1) See Sheet 27 for "Notes."
2) Each scaffold consists of 2 units, opposite hand to each other and alike except that only one unit has the ladder.
3) For ID1 thru 4, scaffold will have to be moved from one end of the diaphragm to the other.

SCAFFOLD FOR INTERMEDIATE DIAPHRAGMS

SCAFFOLDS FOR GIRDERS —
INITIAL ERECTION (Sheet 4 of 4)

LOUISIANA DOT PROJECT #450-37-02
ST. CHARLES PARISH LULING, LA.

THE MELBOURNE BROS. CONSTRUCTION CO.
NORTH CANTON OHIO

JOB NO. DATE 8-30-79 SHEET NO. 30 OF

REVISIONS	DATE
For Review	8-31-79

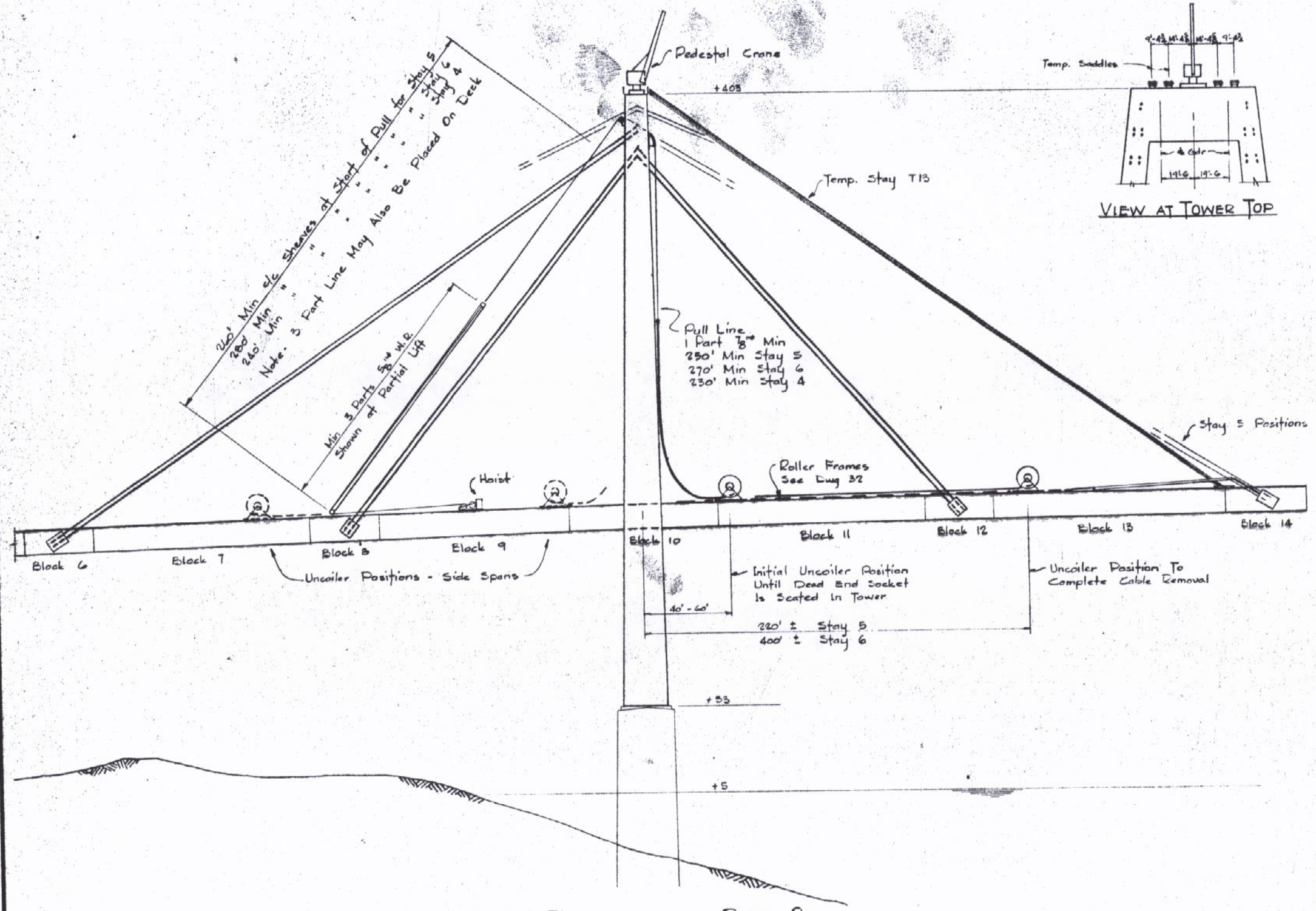

ELEVATION AT PIER 2

1" = 30'

SHOWN AT STAY 5 ERECTION - OTHER STAYS SIMILAR

ERECTION PROCEDURE FOR PERMANENT STAYS

1. Stays will be delivered to job on reels.
2. Stays on reels will then be transferred to the stay erection area on the girder deck.
3. Cable reels will then be mounted in uncoilers and secured in a position 40 to 60 feet from the center line of the tower.
4. A pulling cable will be attached to the dead end socket of the stay. The pulling cable goes through the top of the tower and down to the deck on the opposite face of the tower.
5. The pulling cable unwinds the stay from the reel until the dead end socket can be seated in the tower saddle. The pedestal crane at the tower top will be used to assist installation.
6. The remainder of the stay is then removed from the reel and laid out in a line on the deck supported intermittently on roller frames. Roller frames are also provided at the face of the tower and entry of the cross girder to ensure a minimum radius for each stay.
7. The stay will be pulled out as far as possible on the roller frames using temporary means. The all-threaded pull rod and strand adaptor will then be connected to the live end socket.
8. The pulling strands and stay are supported and oriented along the deck by roller frames until the stay and strands are lifted by the jacking forces.
9. The live end socket will be installed in the cross box girder by using Prescon jacking equipment previously placed (Refer to Prescon Drawings). Using the 0.6 strand with adapter and chair, jack the pull rod into position with 0.6 strand until the primary nut can be installed.
10. Jack the pull rod until the stay socket is in position to install 3" split washers. Jack further to install shims required.
11. Release jacking equipment and install at new location of next stay to be erected.
12. 600 ton ram - 9,280 psi gauge pressure at capacity. 1000 ton ram - 8,205 psi gauge pressure at capacity. Use gauge pressure readings to establish load in stays during initial installation.
13. For final adjustment of stays where required, all necessary geometric data of the stays and completed structure will be determined. This information will be used by HRTB to compute any final shim adjustments.

APPROVED
For Design, Material & Workmanship

Frankland & Lienhard
By T.T. 10-10-80

RECEIVED
OCT 7 1980

APPROVED
LOUIS A. GARRIDO
BRIDGE DESIGN ENGINEER
By RFB Date SEP 14 1980

Redrawn	5/16/80	DATE
		REVISIONS

PERMANENT STAY ERECTION
ARRANGEMENT AND PROCEDURE
LOUISIANA DOT PROJECT # 450-37-02
ST CHARLES PARISH LULING, LA

THE MELBOURNE BROS. CONSTRUCTION CO.
NORTH CANTON OHIO
JOB NO. 142 DATE 8-24-77

SHEET NO. 31 OF

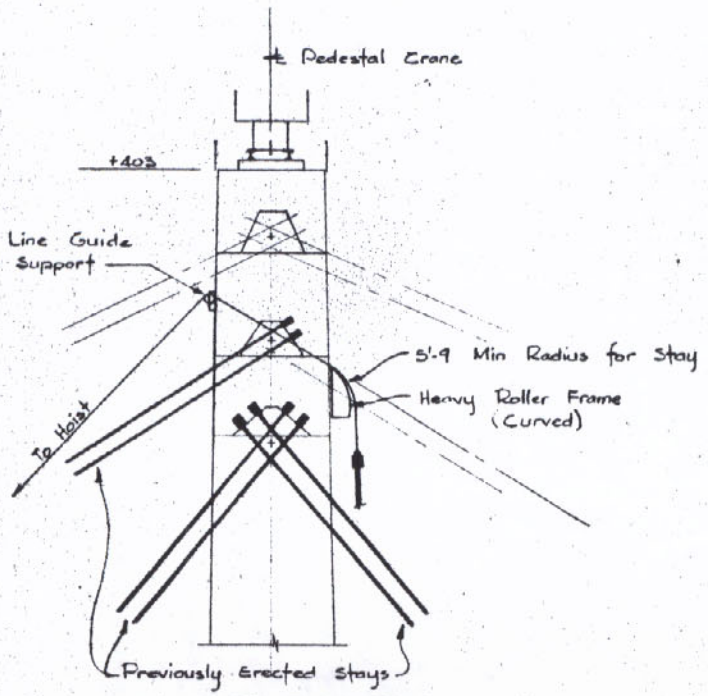

SECTION AT TOP OF TOWER
1" = 10'

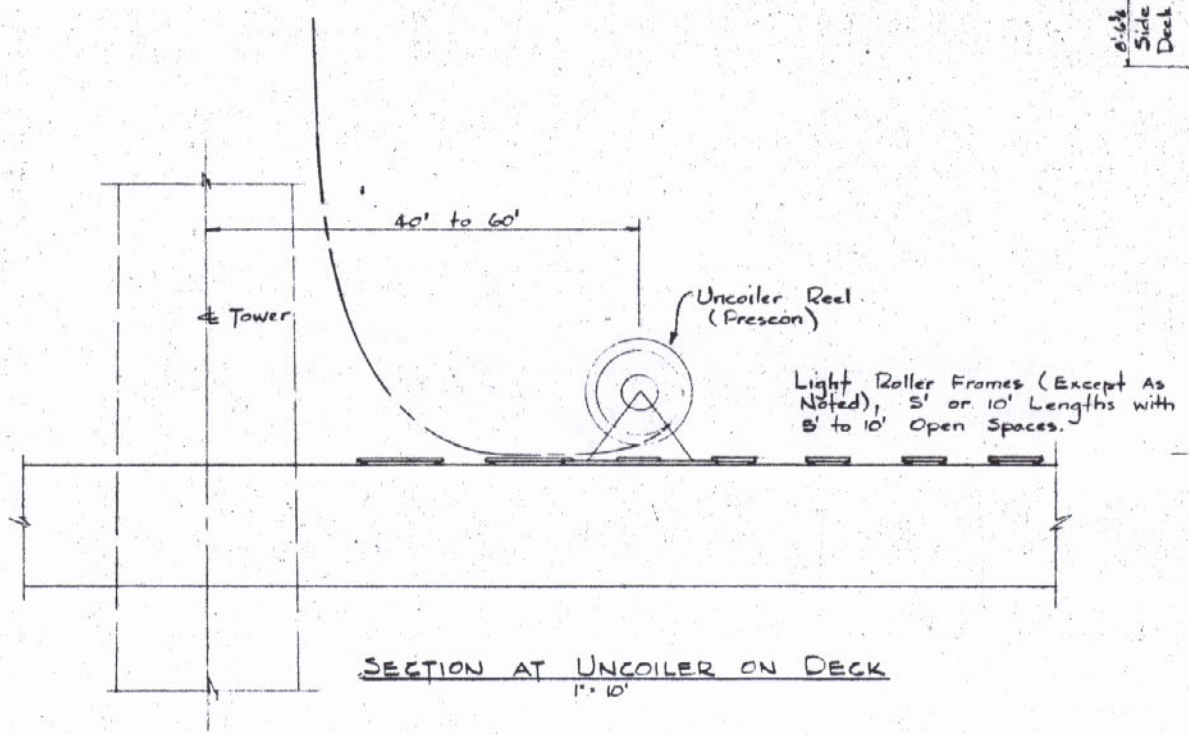

SECTION AT UNCOILER ON DECK
1" = 10'

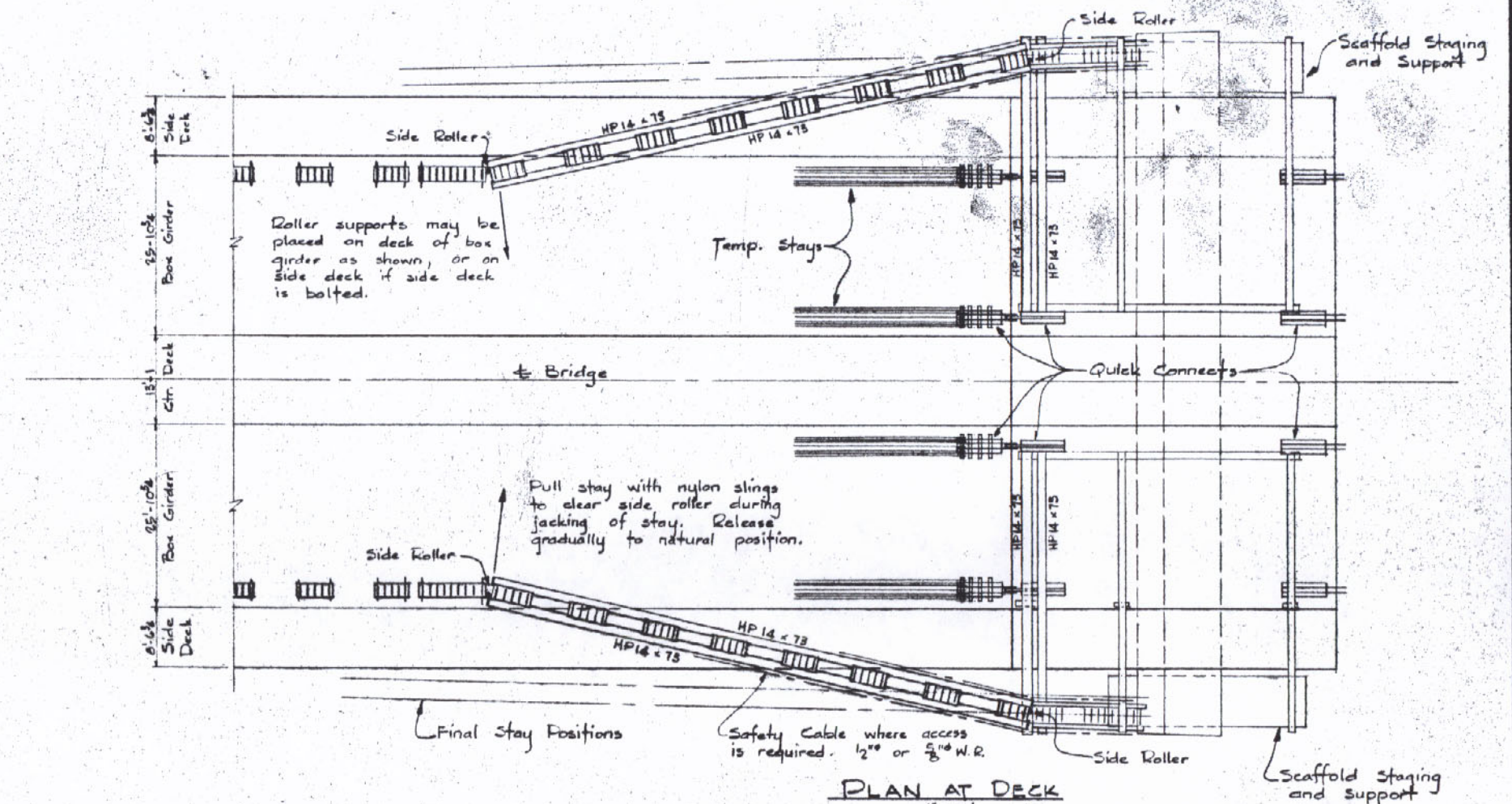

PLAN AT DECK
1" = 10'

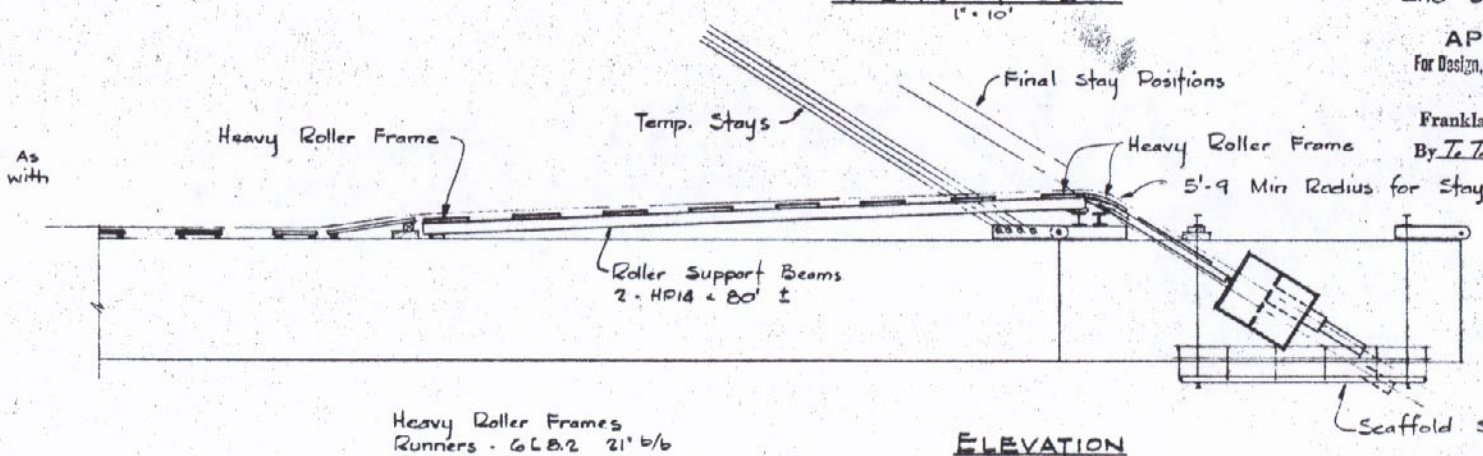

ELEVATION
1" = 10'

Heavy Roller Frames
Runners - 6 LB.2 21" b/b
Rollers 4" x 10 ga.
1200# Cap ea @ 1'-0 ctrs

Light Roller Frames
Runners - 3 1/2 x 1 1/2 x 1/8 21" b/b
Rollers - 1.9" x .065"
310# Cap. ea. @ 1'-0 ctrs

Layout Shown At Stay 5. Other Stays Similar.

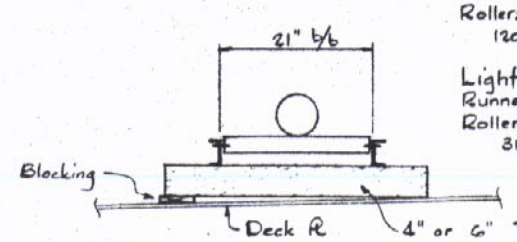

ROLLER SUPPORT ON DECK

APPROVED
LOUIS A. GARRIDO
BRIDGE DESIGN ENGINEER
By RFB Date SEP 1 4 1980

APPROVED
For Design, Material & Workmanship
Frankland & Lienhard
By T.T. 10-10-80

RECEIVED OCT 7 1980

PERMANENT STAY ERECTION

REVISIONS	DATE
Change Bolt Note For Side Deck	9/5/80
Redrawn	5/6/80

TYPICAL LAYOUT & RIGGING
LOUISIANA DOT PROJECT # 450-37-02
ST CHARLES PARISH LULING, LA
THE MELBOURNE BROS. CONSTRUCTION CO.
NORTH CANTON OHIO
JOB NO. 1429 DATE 8-30-77
SHEET NO. 32 OF

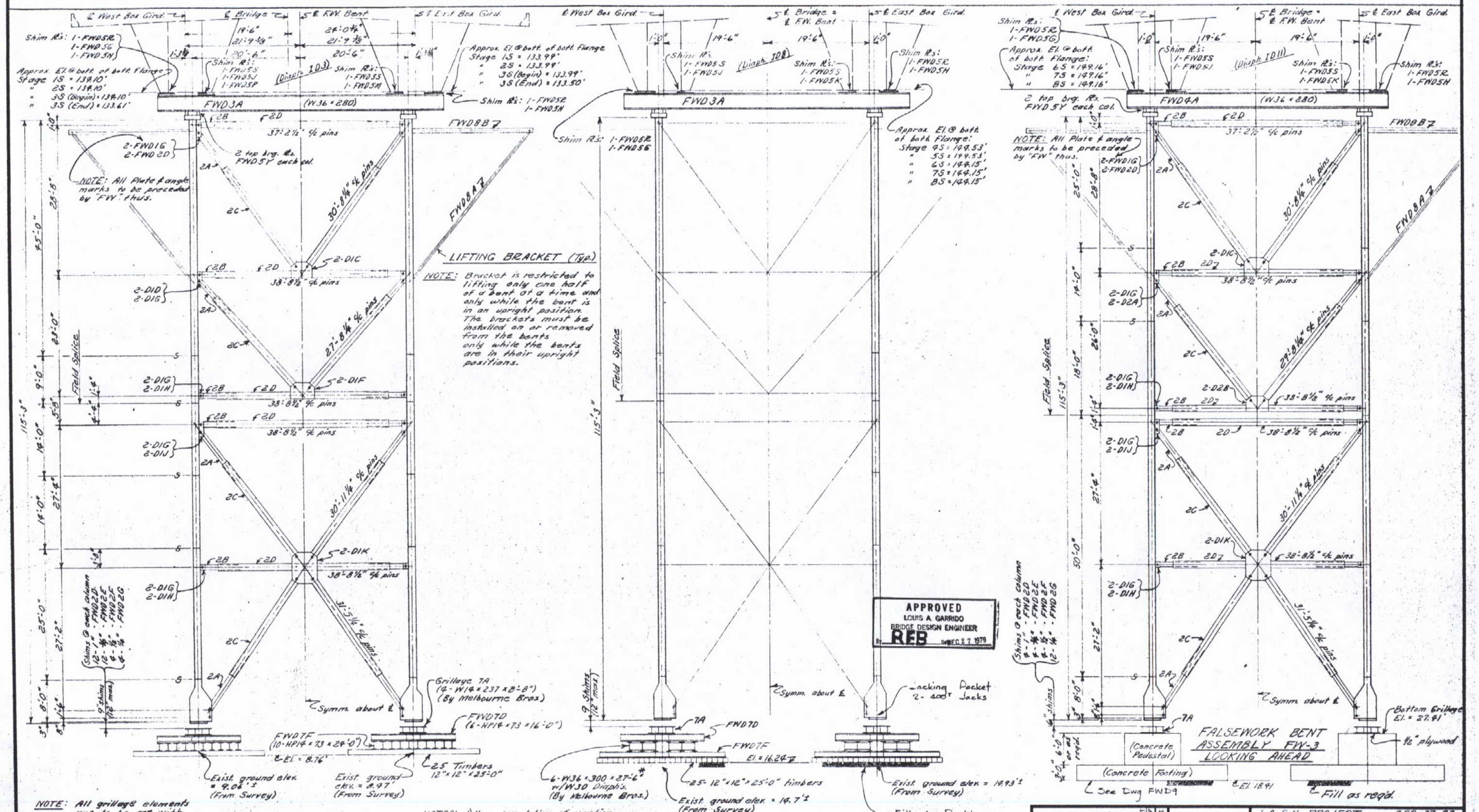

NOTES: 1) Upon completion of erection Stage 3S, Falsework Bent FW-1 is to be released and relocated at Falsework Bent FW-2 location. (20-8). Bent at FW-2 is to be reassembled as shown at FW-1 location except as noted otherwise.
2) See Drwg. FW4 for additional notes.

For Revised Elevations & Det.	8/1/77	DATE
		REVISIONS

LA S.H. PROJECT 450-37-02

BRIDGE OVER MISS. RIVER
LULING, LOUISIANA
FALSEWORK BENTS

THE MELBOURNE BROS. CONSTRUCTION CO.
NORTH CANTON OHIO

JOB NO. 1229 DATE 5 Mar. 1977

SHEET NO. FW2 OF

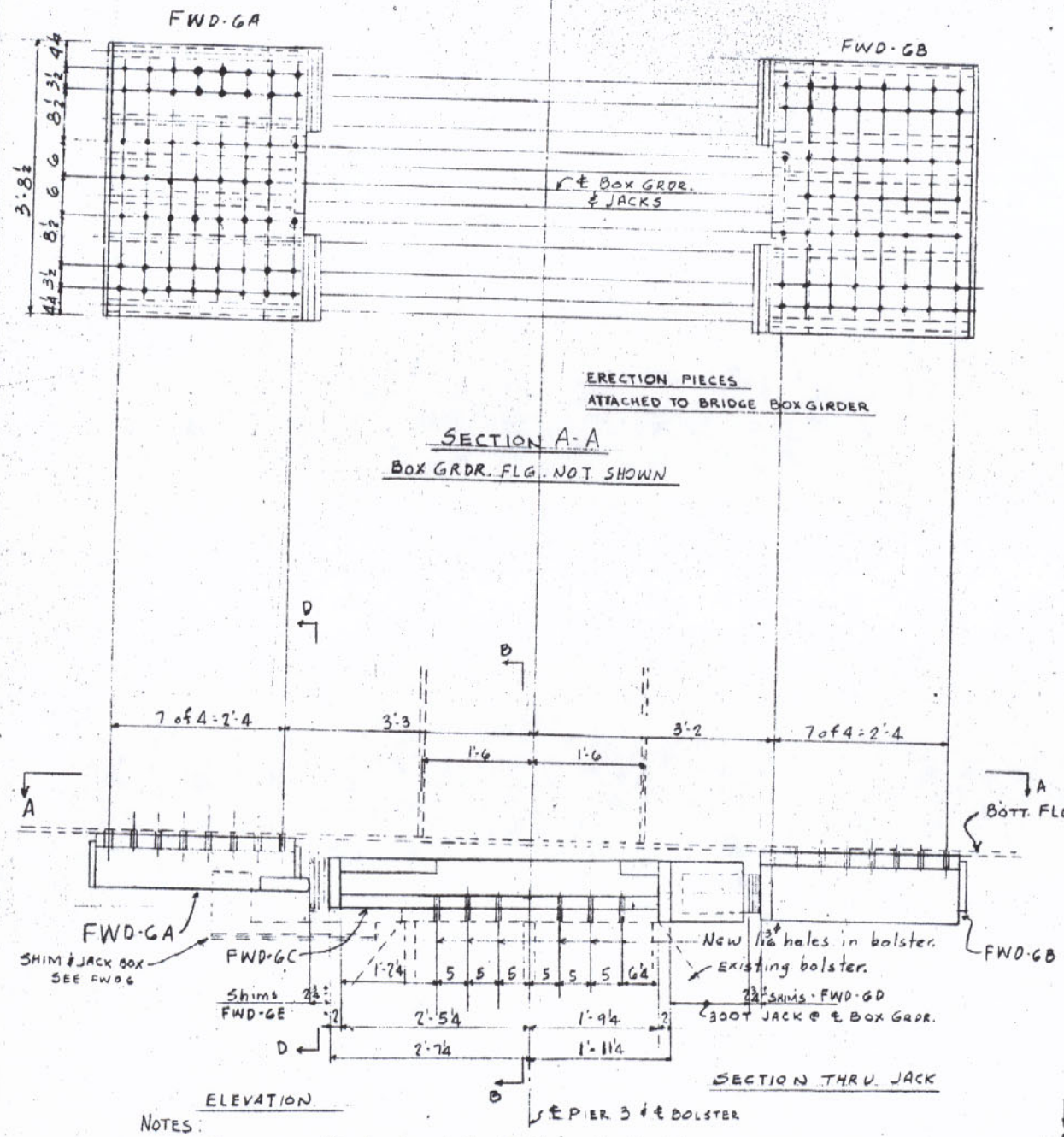

NOTES:

Temporary fix designed for 500K longitudinal force at each box girder.

All vertical reactions taken by permanent bearings.

Fix is required at East & West girders.

SEE DWG. FW-4 FOR ALTERATIONS TO BRIDGE DETAILS.

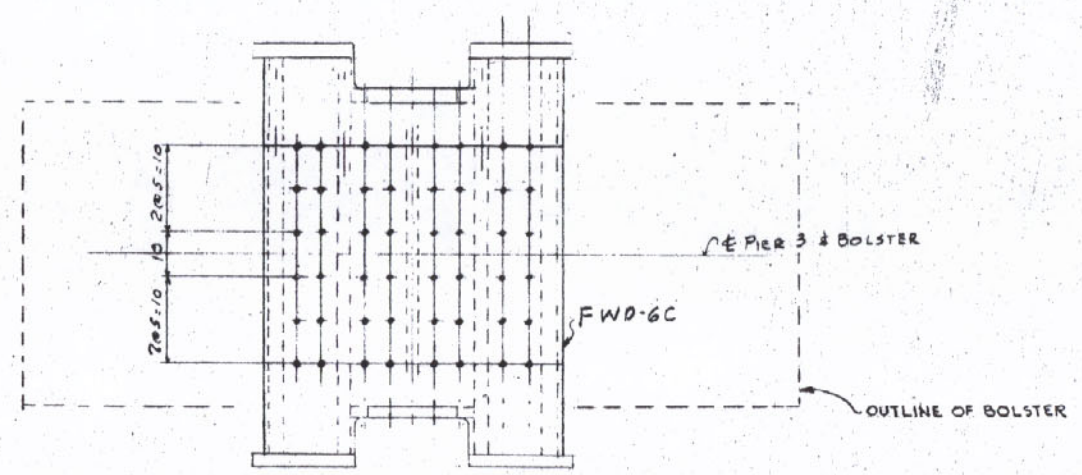

SECTION C-C AT BOLSTER

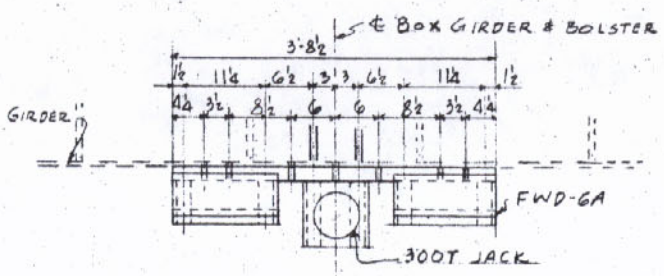

SECTION D-D AT BOX GIRDER

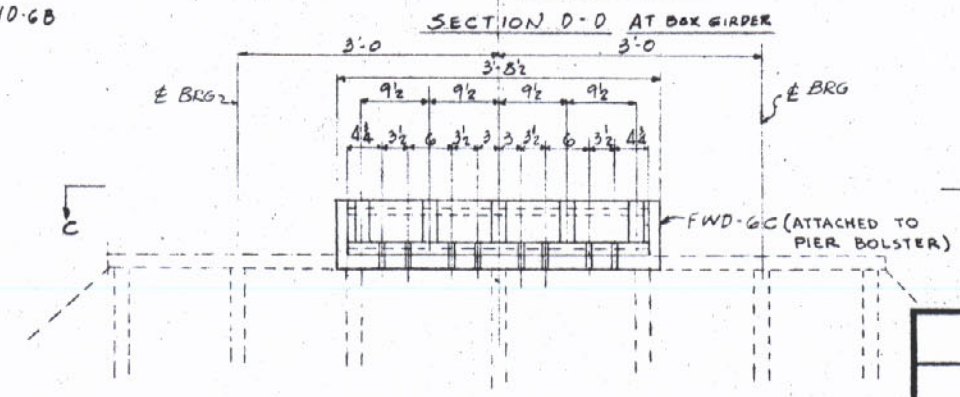

SECTION B-B

MATL. A36 STEEL

SEE DWG FWD-6 FOR DETAILS OF FIX.
BOLTS ARE 1 1/8" A325, FRICTION TYPE WITH HEX NUTS AND WASHERS

APPROVED
LOUIS A. GARRIDO
BRIDGE DESIGN ENGINEER
By REB Date DEC 27 1979

GREEN INTERNATIONAL, INC.
SEWICKLEY, PA.

BRIDGE OVER MISS. RIVER LULING, LOUISIANA	
L.A.S.H. PROJECT 450-37-02	
TEMPORARY FIX & JACKING ASSEMBLY AT PIER 3	
THE MELBOURNE BROS. CONSTRUCTION CO. NORTH CANTON OHIO	SHEET NO. FW3
JOB NO 1429	DATE

For Review 8/5/79 — DATE — REVISIONS

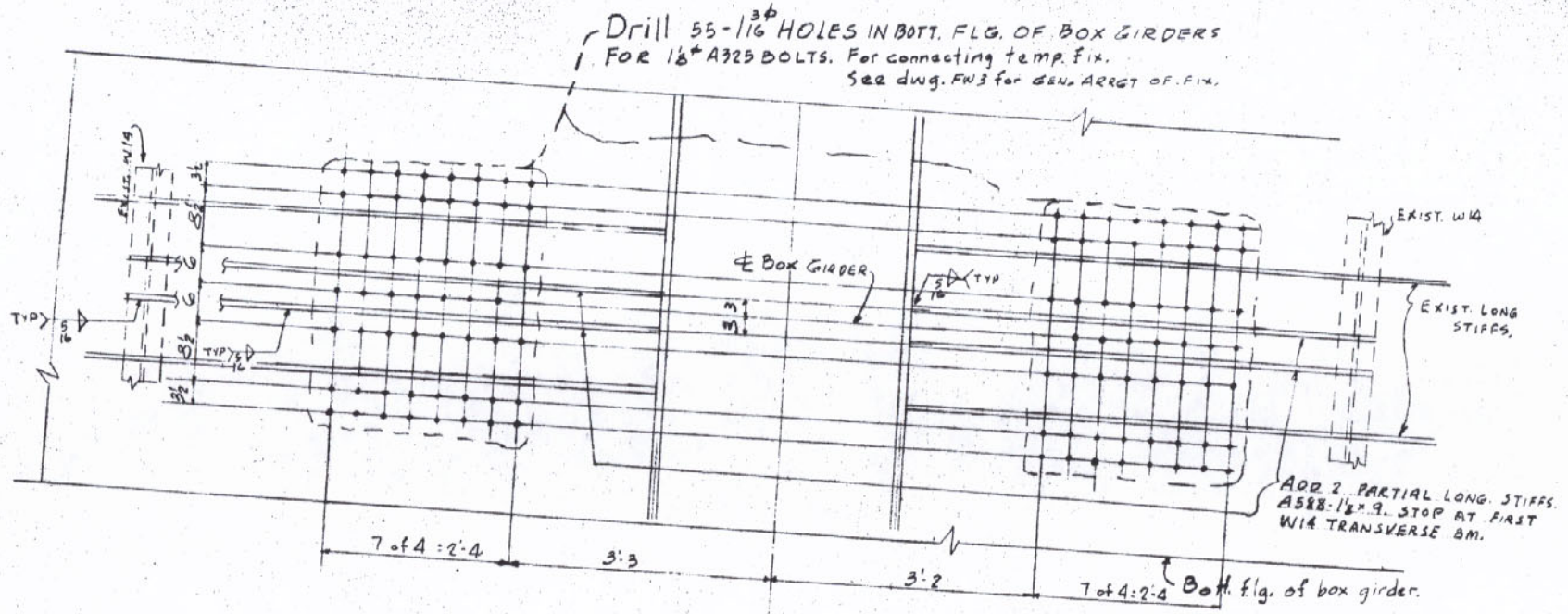

SECTION A-A

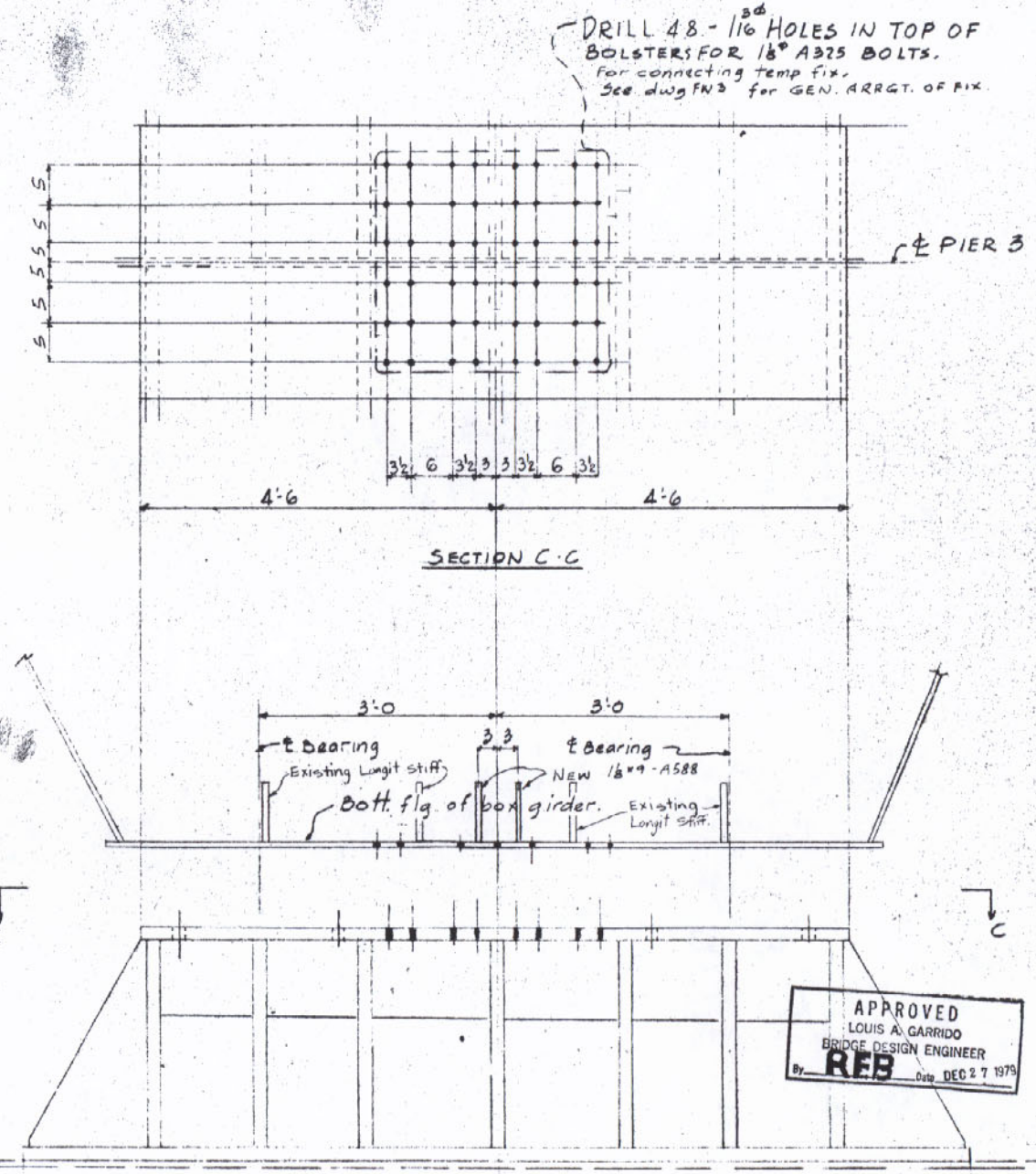

SECTION C-C

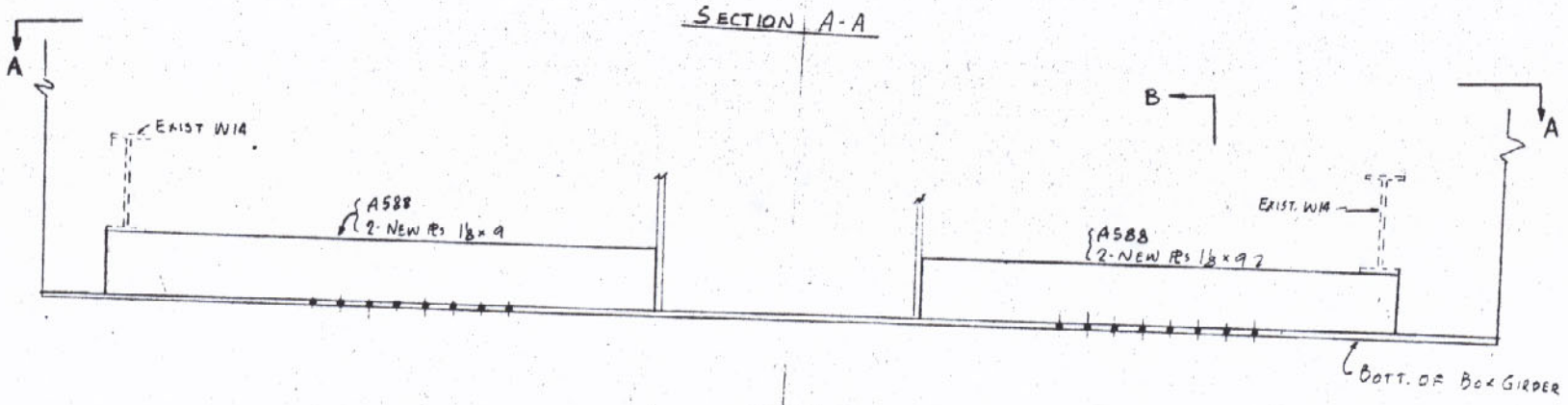

SECTION B-B

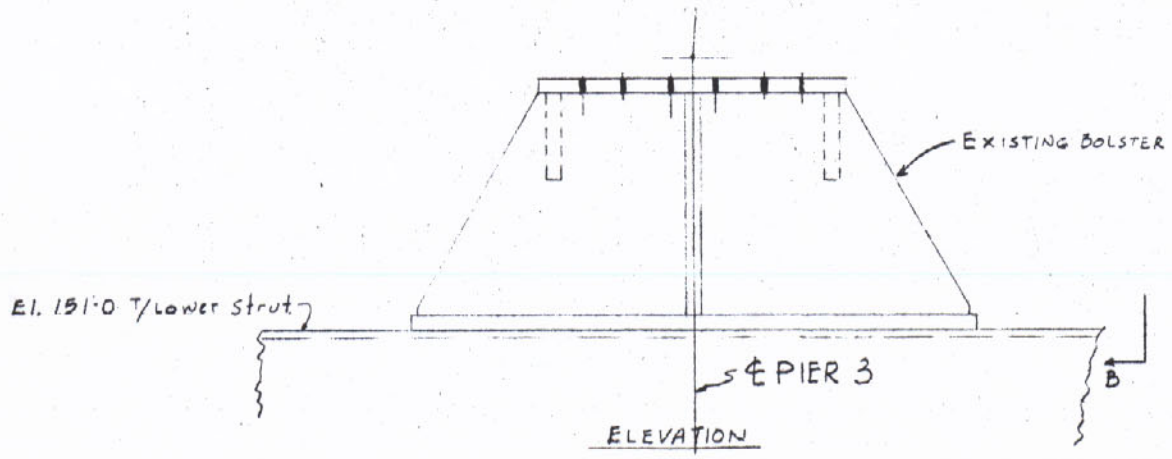

ELEVATION

This dwg. shows alterations to bridge details required for temp. fix of span at Pier 3 for erection of steel.
The east girder is shown. Details also apply to west girder.
See dwg. FW3 for GEN. ARRGT. OF FIX.
TEMP. FIX DESIGNED FOR 500K LONGT. FORCE AT EACH BOX GIRDER.
ALL VERT. REACTIONS TAKEN BY PERM. BRGS.

GREEN INTERNATIONAL, INC.
SEWICKLEY, PA.

REVISIONS	DATE
For Review	6/4/79

BRIDGE OVER MISS. RIVER
LULING, LOUISIANA

L.A.S.H. PROJECT 450-37-02

BRIDGE ALTERATIONS FOR TEMPORARY FIX & JACKING FACILITIES AT PIER 3

THE MELBOURNE BROS. CONSTRUCTION CO.
NORTH CANTON OHIO

JOB NO. 1429 DATE 5 MAR. 1979

SHEET NO. FW4 OF

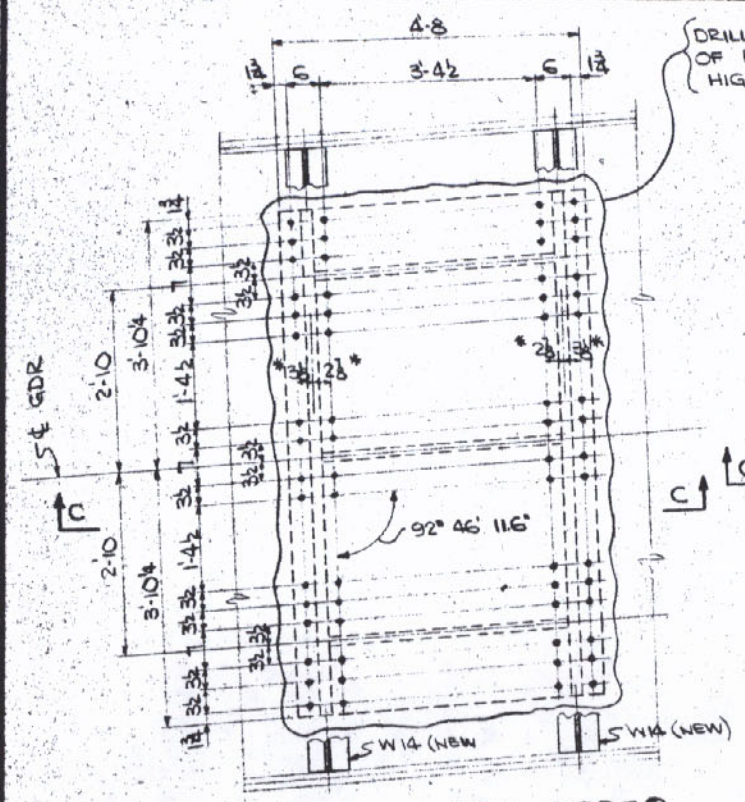

PLAN AT BOTTOM FLG OF BOX GIRDER
(EAST GDR AT PIER P1S)

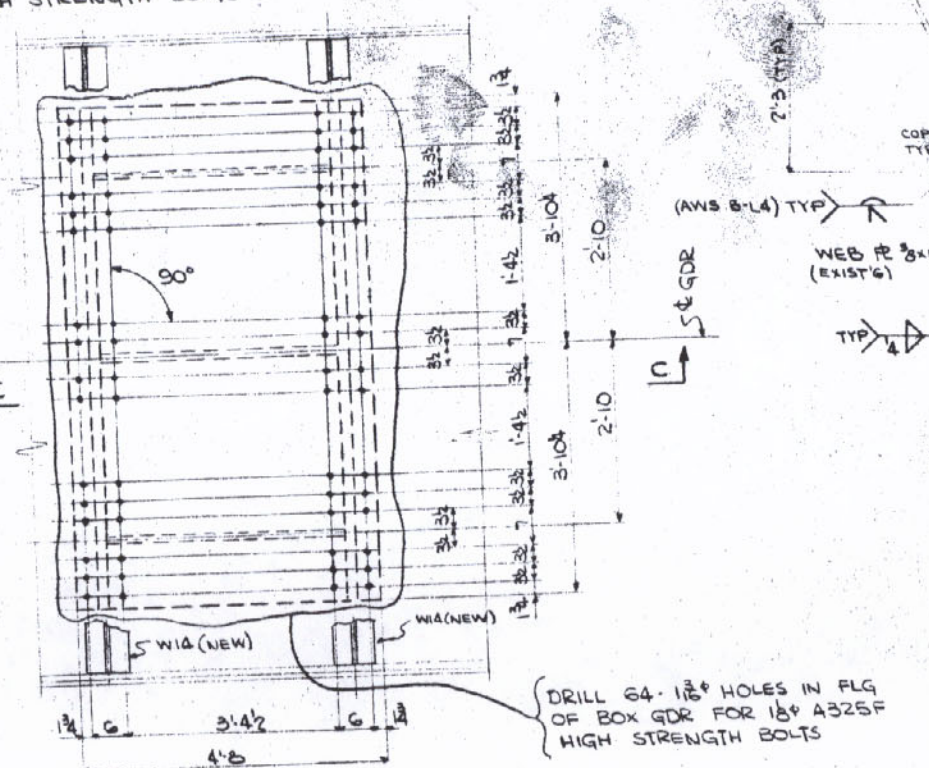

PLAN AT BOTTOM FLG OF BOX GIRDER
(WEST GDR AT PIER P1S, BOTH EAST & WEST GDR AT PIER P1N)

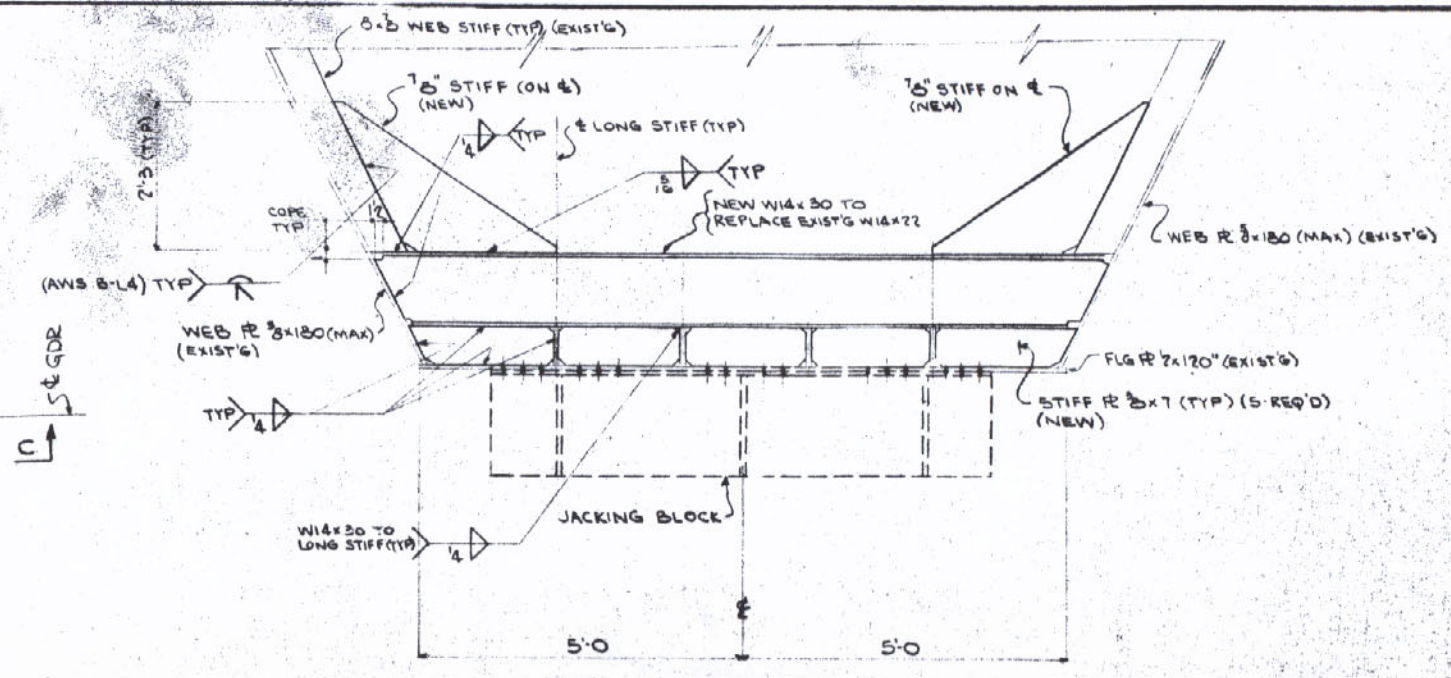

SECTION "AA"

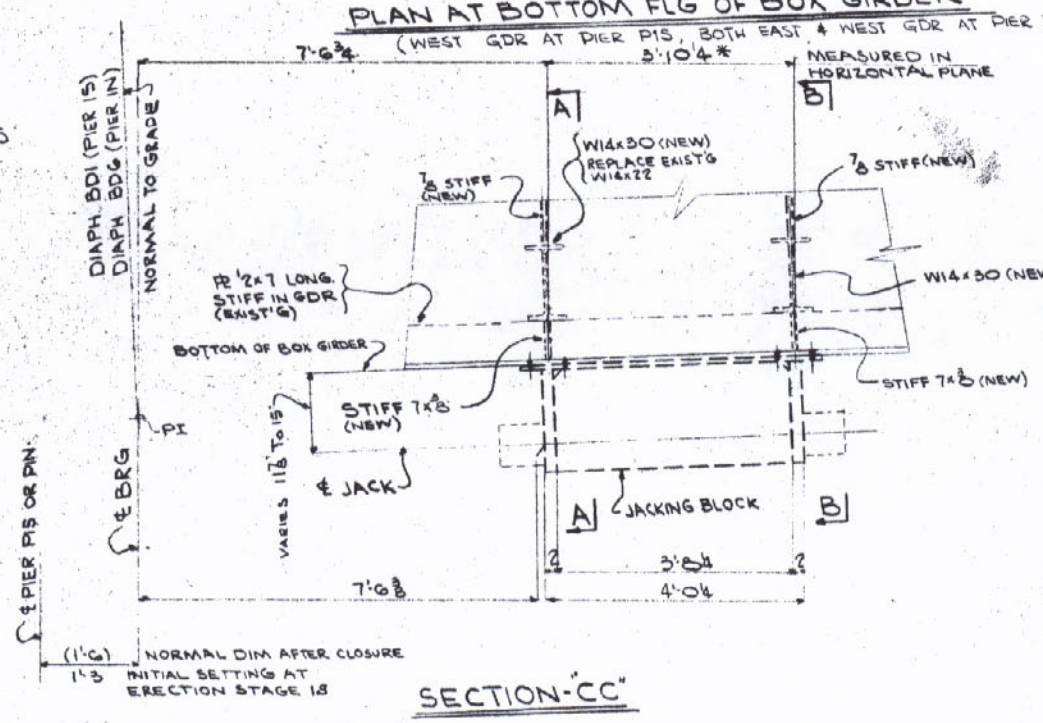

SECTION "CC"

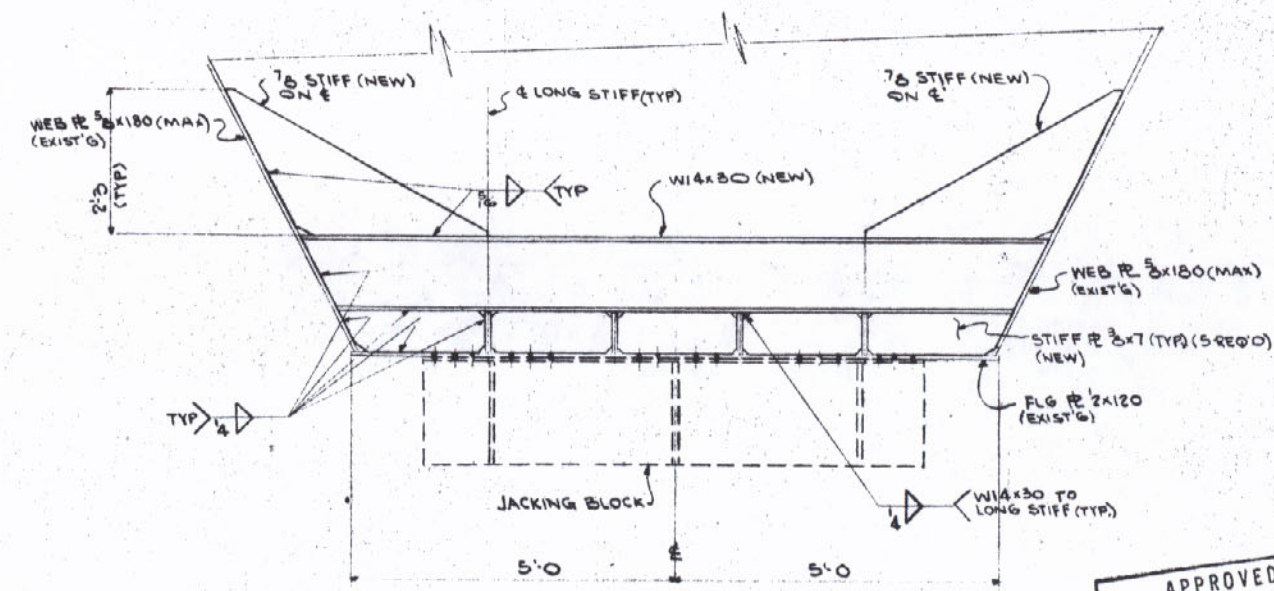

SECTION "BB"

* AS SHOWN ON IHI INTERNATIONAL, INC. SHOP DRAWING S-125

JACKING BLOCK DESIGNED FOR A JACKING LOAD OF 210K LONGITUDINAL AT EACH BOX GIRDER.

"NOTES"

- THIS DWG SHOWS ALTERATIONS TO BRIDGE GIRDER DETAILS REQUIRED FOR JACKING ARRANGEMENT AT PIER P1S & PIER P1N FOR ERECTION OF STEEL.
- SEE DWG FW7 FOR DETAILS OF JACKING FACILITIES.
- ALL NEW MATERIAL - A588 STEEL.

APPROVED
LOUIS A. GARRIDO
BRIDGE DESIGN ENGINEER
DEC 7 1979
By REB Date

REVISIONS	DATE
Change Jack Loads	4/4/79
For Review	4/2/79

BRIDGE OVER MISS. RIVER
LULING, LOUISIANA
LASH PROJECT 450-37-02
BRIDGE ALTERATIONS FOR TEMP. FIX AT PIER P1S & P1N

THE MELBOURNE BROS. CONSTRUCTION CO.
NORTH CANTON OHIO
JOB NO. 1429 DATE 4 MAR 1979
SHEET NO. FW5 OF

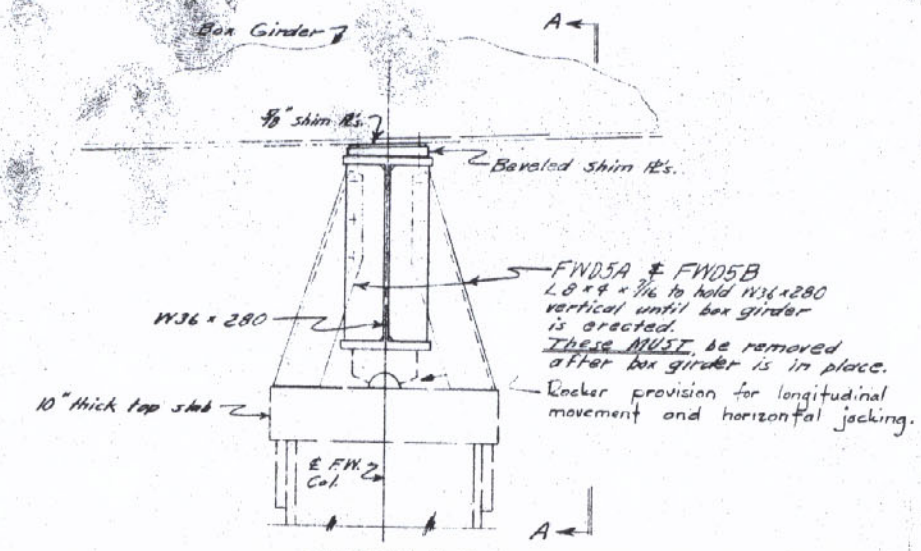

SECTION B-B

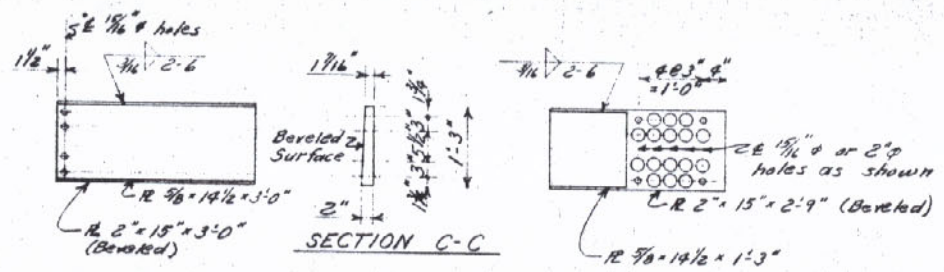

SECTION C-C

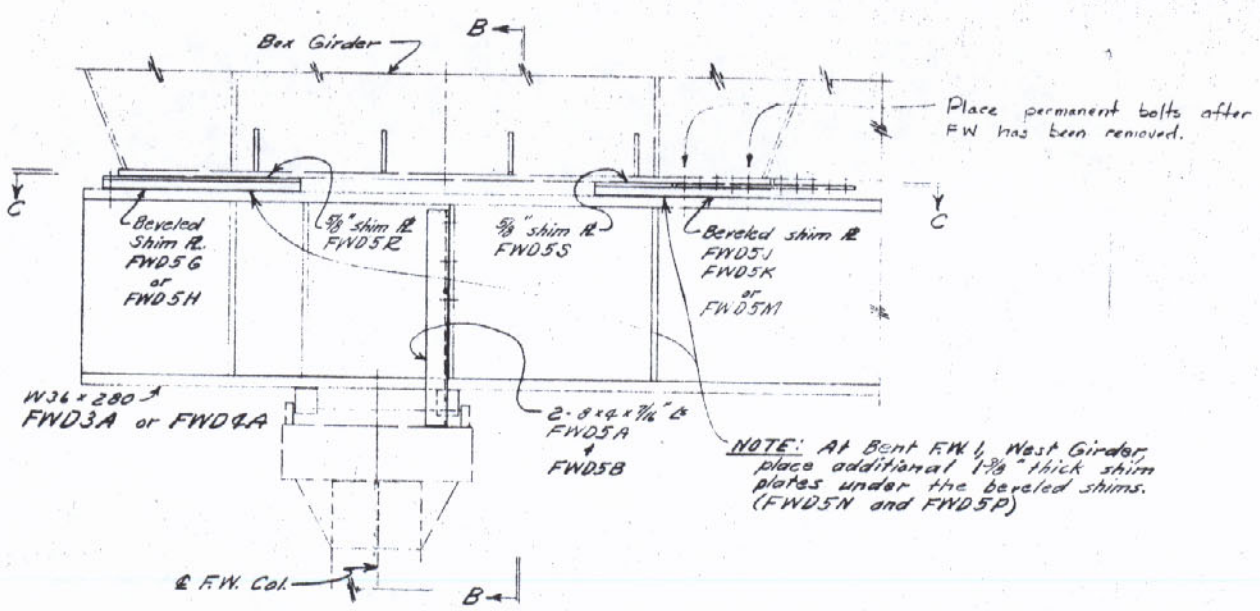

SECTION A-A

DETAILS AT TOP OF FALSEWORK BENTS

APPROVED
LOUIS A. GARRIDO
BRIDGE DESIGN ENGINEER
By RFB Date DEC 27 1979

WORK THIS D'WG. WITH FW-2.

REVISIONS	DATE
Add Rocker Note	8/21/79
For Review	8/31/79
Change & Rev.	12-27-79

BRIDGE OVER MISS. RIVER
LULING, LOUISIANA

L.A.S.H. PROJECT 450-37-02

MISC. DETAILS AT FALSEWORK BENTS

THE MELBOURNE BROS. CONSTRUCTION CO.
NORTH CANTON OHIO

JOB NO. 1627 DATE 5-[illegible]

SHEET NO. FW6

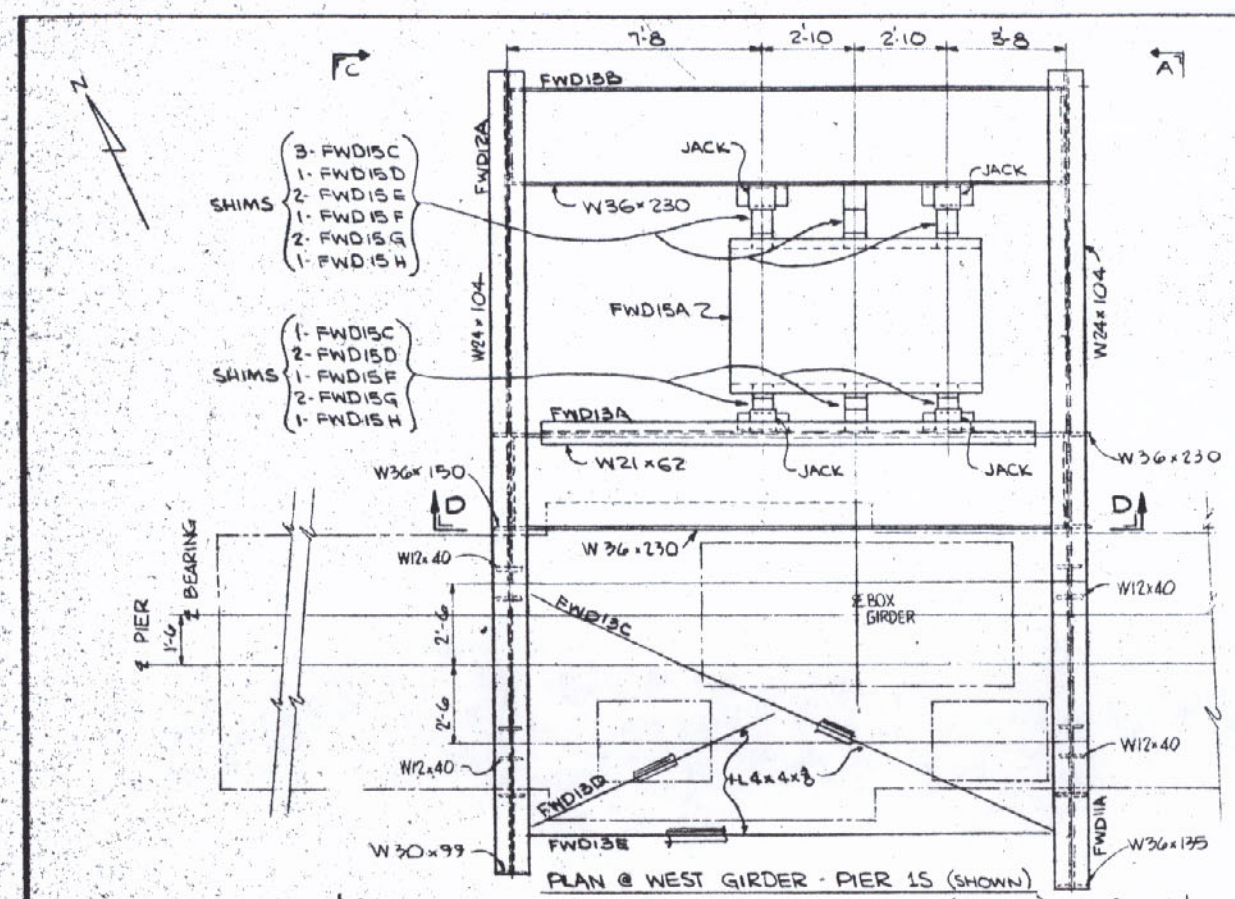

PLAN @ WEST GIRDER - PIER 1S (SHOWN)
PLAN @ BOTH GIRDERS - PIER 1N (SIMILAR)
SCALE: 3/8" = 1'-0"

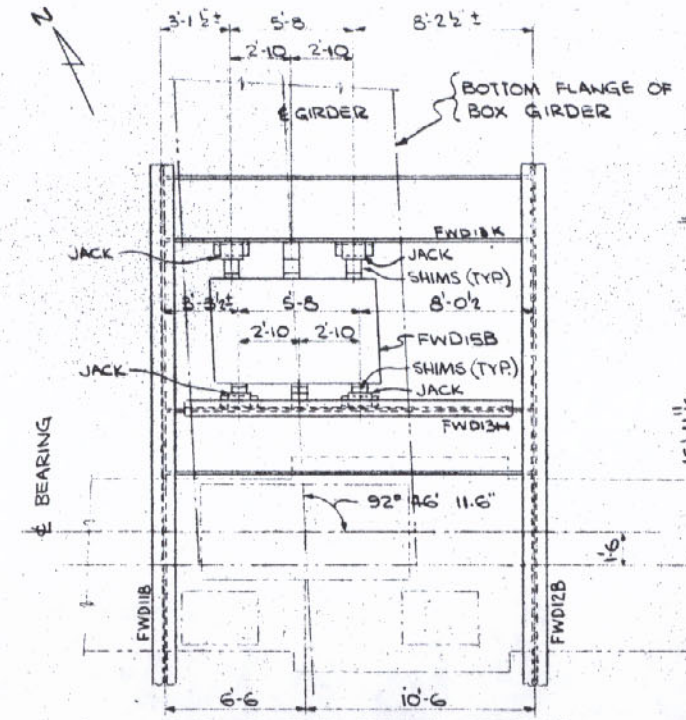

PLAN @ EAST GIRDER - PIER 1S
(FOR DETAILS NOT SHOWN, SEE PLAN @ WEST GIR.)
SCALE: 3/8" = 1'-0"

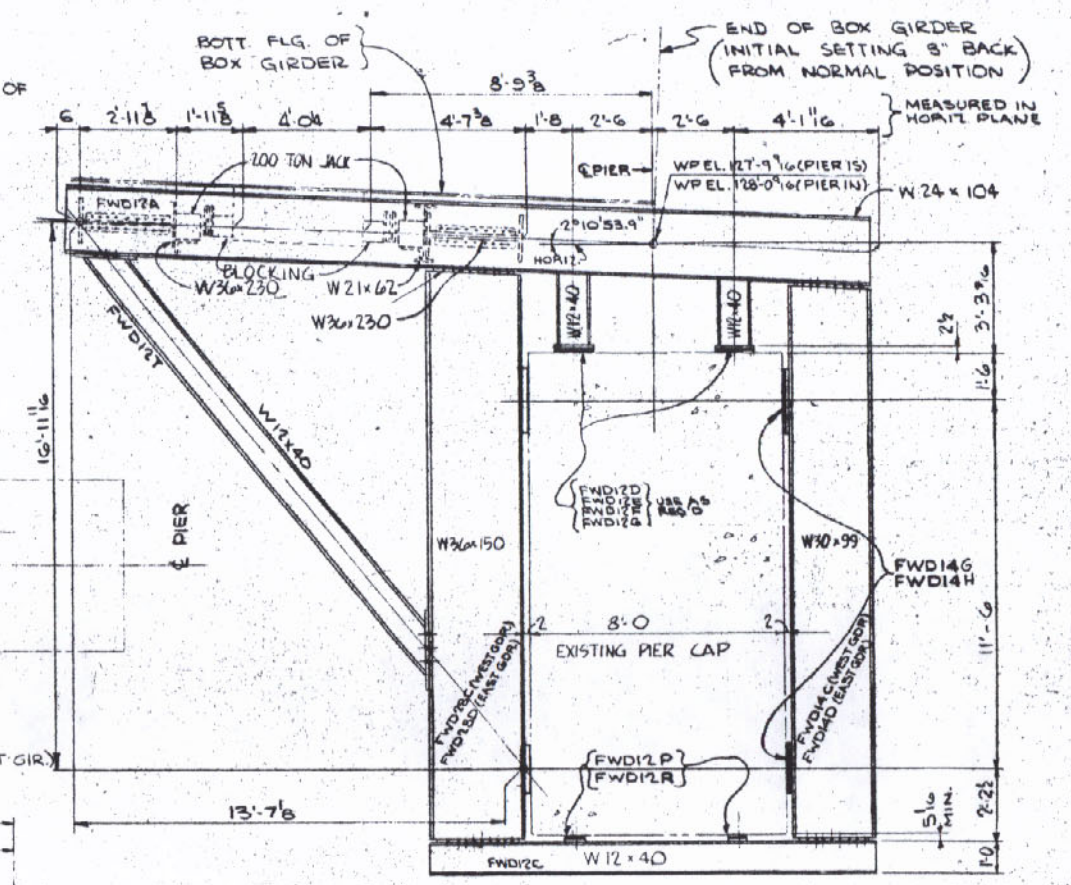

SECTION C-C
SCALE: 3/8" = 1'-0"

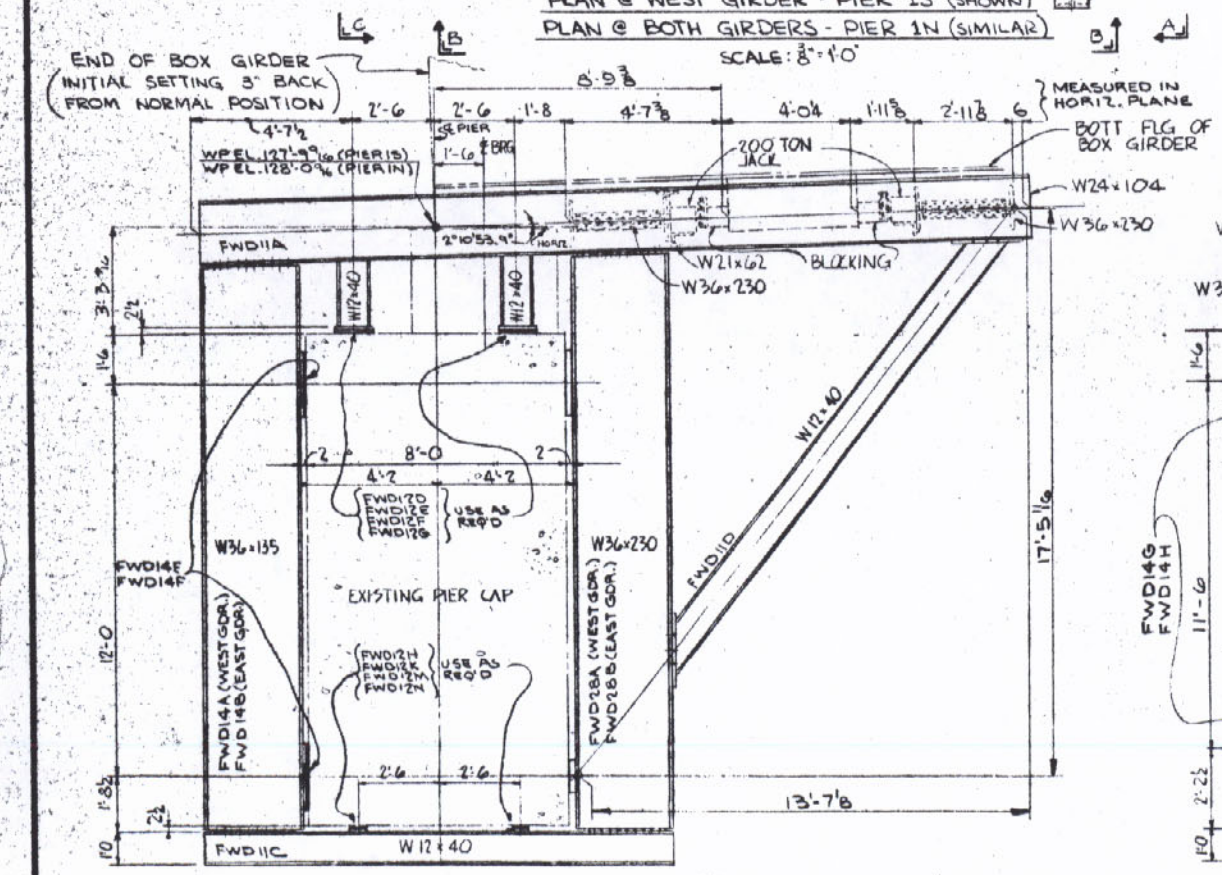

SECTION A-A
SCALE: 3/8" = 1'-0"

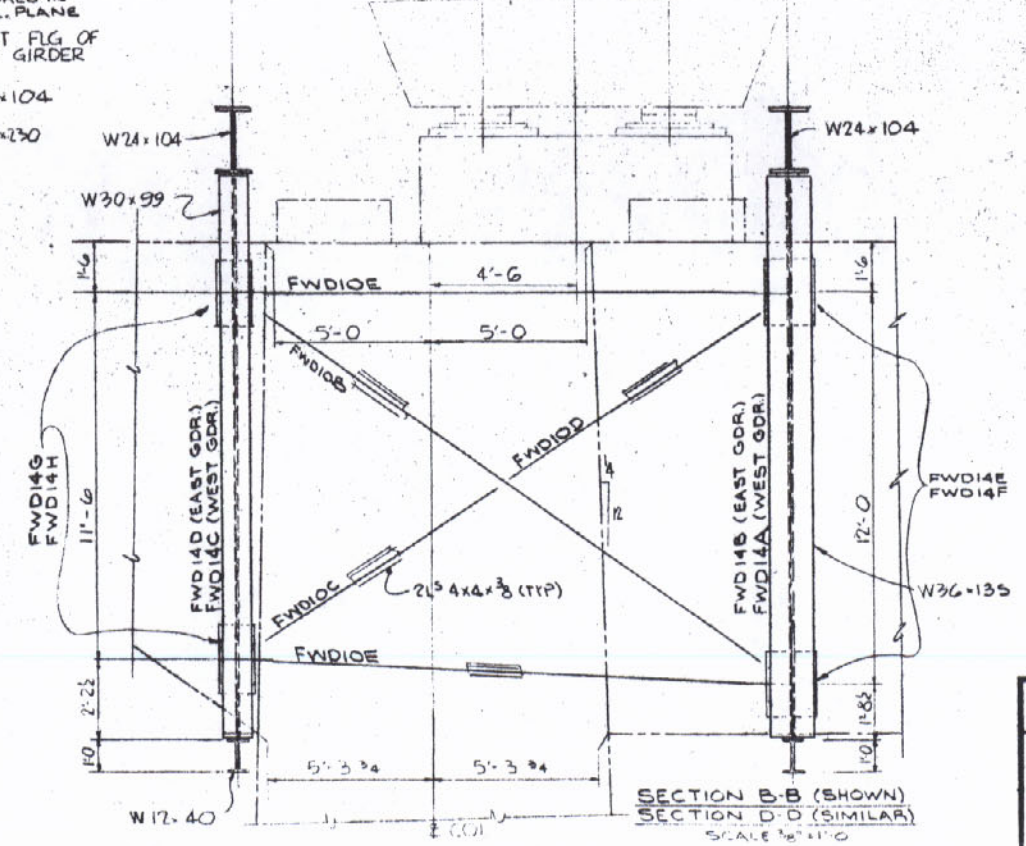

SECTION B-B (SHOWN)
SECTION D-D (SIMILAR)
SCALE: 3/8" = 1'-0"

NOTE:
(1) TWO BRACKET ASSEMBLIES ARE REQUIRED AT EACH PIER (PIERS 1S & 1N). QUANTITIES SHOWN IN DETAILS ARE FOR PROVIDING BRACKETS ON ONE PIER ONLY.
(2) PIECE MARKS USING "EAST GIRDER" OR "WEST GIRDER" HAVE BEEN CALLED OUT FOR THEIR ERECTION AT PIER 1S. LOCATIONS AT PIER 1N ARE OPPOSITE HAND.
(3) ALL BOLTED CONNECTIONS SHALL BE MADE USING ASTM A325 HIGH STRENGTH BOLTS WITH HEX NUTS AND WASHERS.
ALL 15/16"Φ HOLES REQUIRE 7/8"Φ BOLTS IN BEARING TYPE CONNECTIONS AND ALL 1 3/16"Φ HOLES REQUIRE 1 1/8"Φ BOLTS IN FRICTION TYPE CONNECTIONS.

APPROVED
LOUIS A. GARRIDO
PROJECT DESIGN ENGINEER
DEC 4 1979
By REB Date

GREEN INTERNATIONAL, INC.
SEWICKLEY, PA.

REVISIONS	DATE

BRIDGE OVER MISS. RIVER
LULING, LOUISIANA

LASH PROJECT 450-37-02

TEMPORARY FIX & JACKING FACILITIES AT PIERS 1S & 1N

THE MELBOURNE BROS. CONSTRUCTION CO.
NORTH CANTON OHIO

JOB NO. DATE

SHEET NO. FW 7 OF

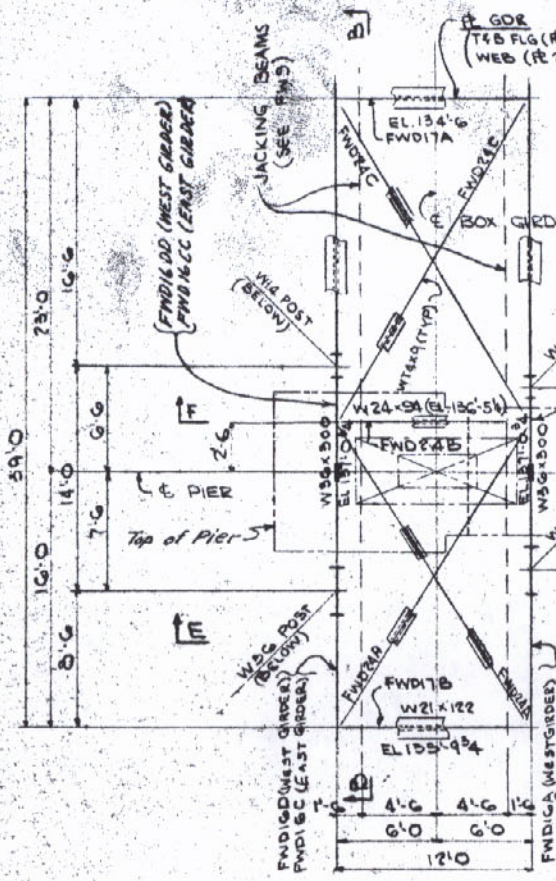

PLAN AT PIER 4 (WEST GIRDER AS SHOWN)
PLAN AT PIER 4 (EAST GIRDER OPP HAND)
(PIER 1 SIMILAR)

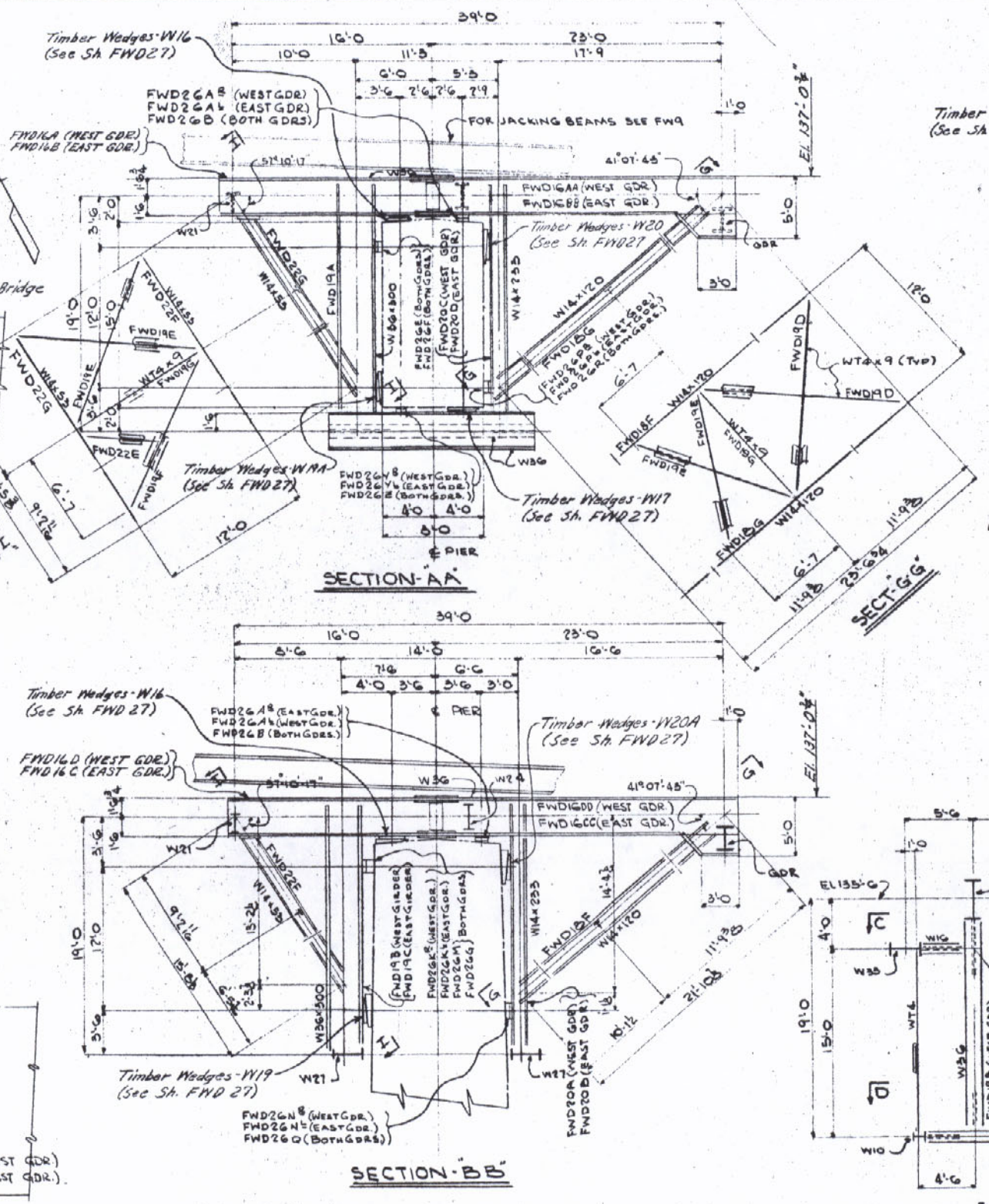

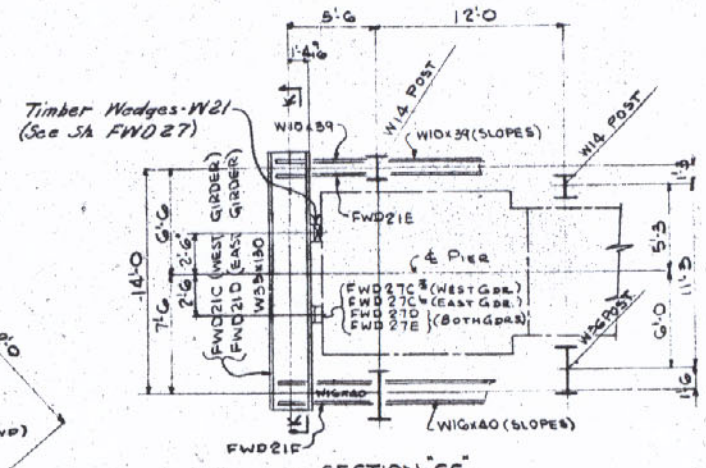

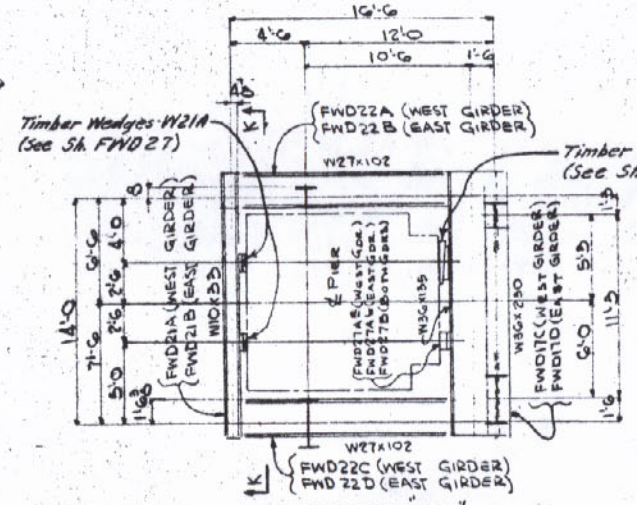

EFFECTORS NOTE
The 10" ϕ lower bearing pins at Piers 1 & 4 must be placed part way into position in the Bearings before erecting the brackets shewn on this drawing.

EFFECTORS NOTE
These brackets must be positioned on the Piers to the same degree of accuracy that the girders must be positioned since they are bolted together during erection.

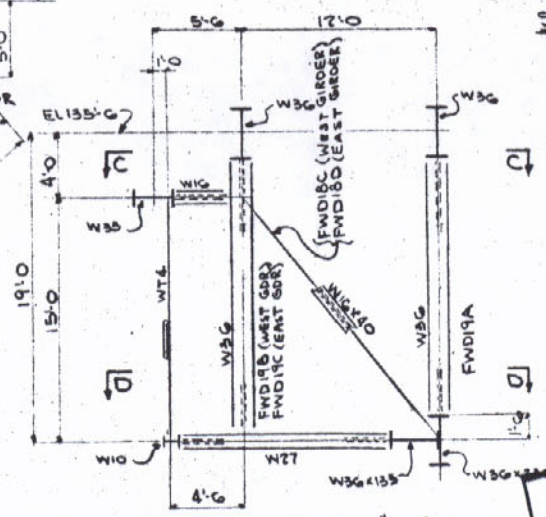

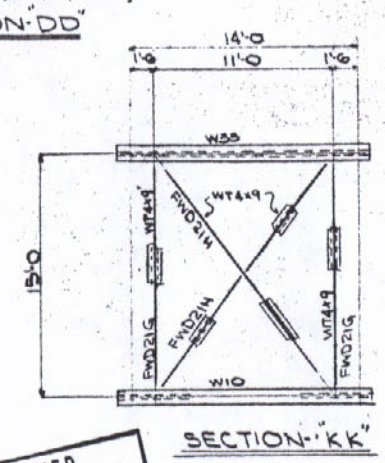

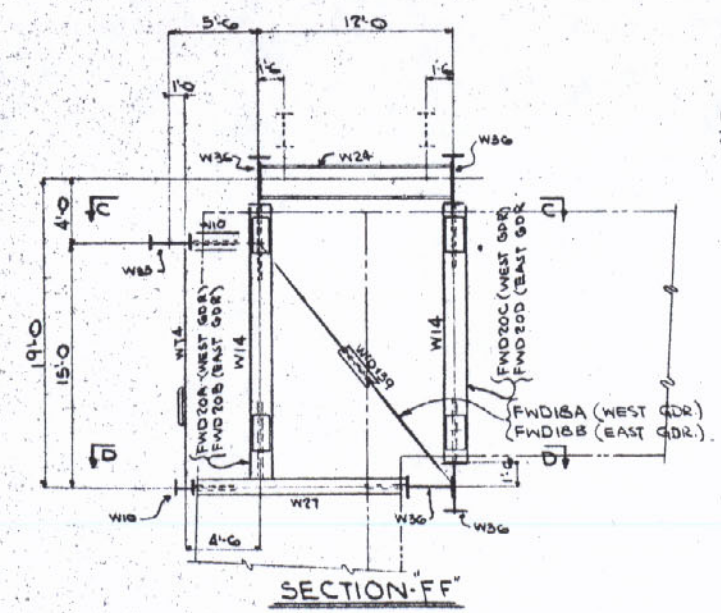

NOTE:
(1) TWO (2) PIER BRACKETS ARE REQUIRED AT EACH PIER. (PIER 1 & PIER 4) QUANTITES SHOWN IN DETAILS ARE FOR ONE(1) PIER ONLY
(2) PIECE MARKS USING "EAST GIRDER" OR "WEST GIRDER" HAVE BEEN CALLED OUT FOR THEIR ERECTION AT PIER 4. LOCATIONS AT PIER 1 ARE OPPOSITE HAND.
(3) ALL BOLTED CONNECTIONS SHALL BE MADE USING A325 HIGH STRENGTH BOLTS WITH HEX NUTS AND WASHERS. ALL 1⅛" ϕ HOLES REQUIRE ⅞" ϕ BOLTS AND ALL 1¼" ϕ HOLES REQUIRE 1" ϕ BOLTS

WORK THIS DWG WITH DWG FW9

APPROVED
LOUIS A. GARRIDO
BRIDGE DESIGN ENGINEER
DEC 27 1979
BY REB DATE

REVISIONS	DATE
For Review 12/7	8/1/79

BRIDGE OVER MISS. RIVER
LULING, LOUISIANA

LASH PROJECT 450-37-02

TEMPORARY SUPPORT BRACKET AT PIER NO. 1 & PIER NO. 4

THE MELBOURNE BROS. CONSTRUCTION CO.
NORTH CANTON OHIO

JOB NO. 1429 DATE 5 MAR. 1979

SHEET NO. FW8 OF

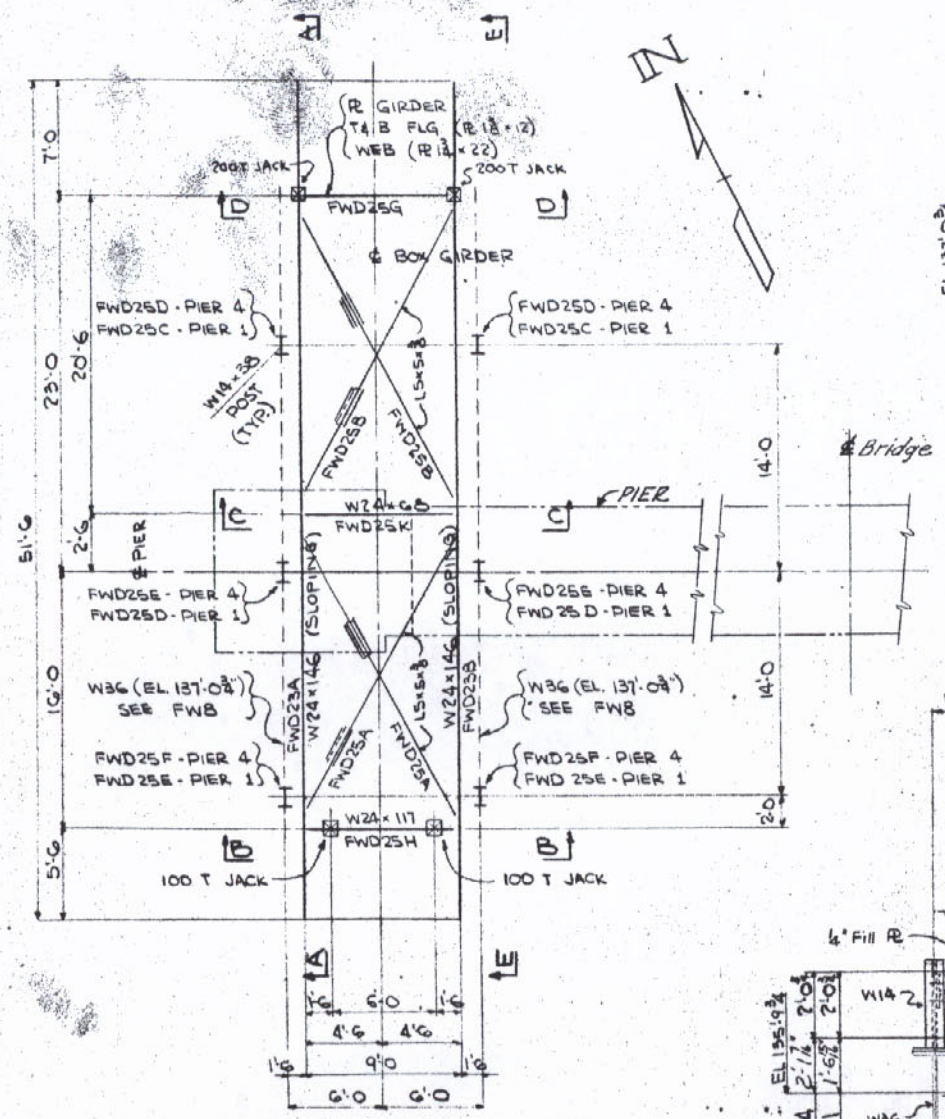

PLAN OF JACKING BEAMS AT PIER 4 (WEST GDR AS SHOWN)
PLAN OF JACKING BEAMS AT PIER 4 (EAST GDR OPP HAND)
(PLAN AT PIER 1 SIMILAR)

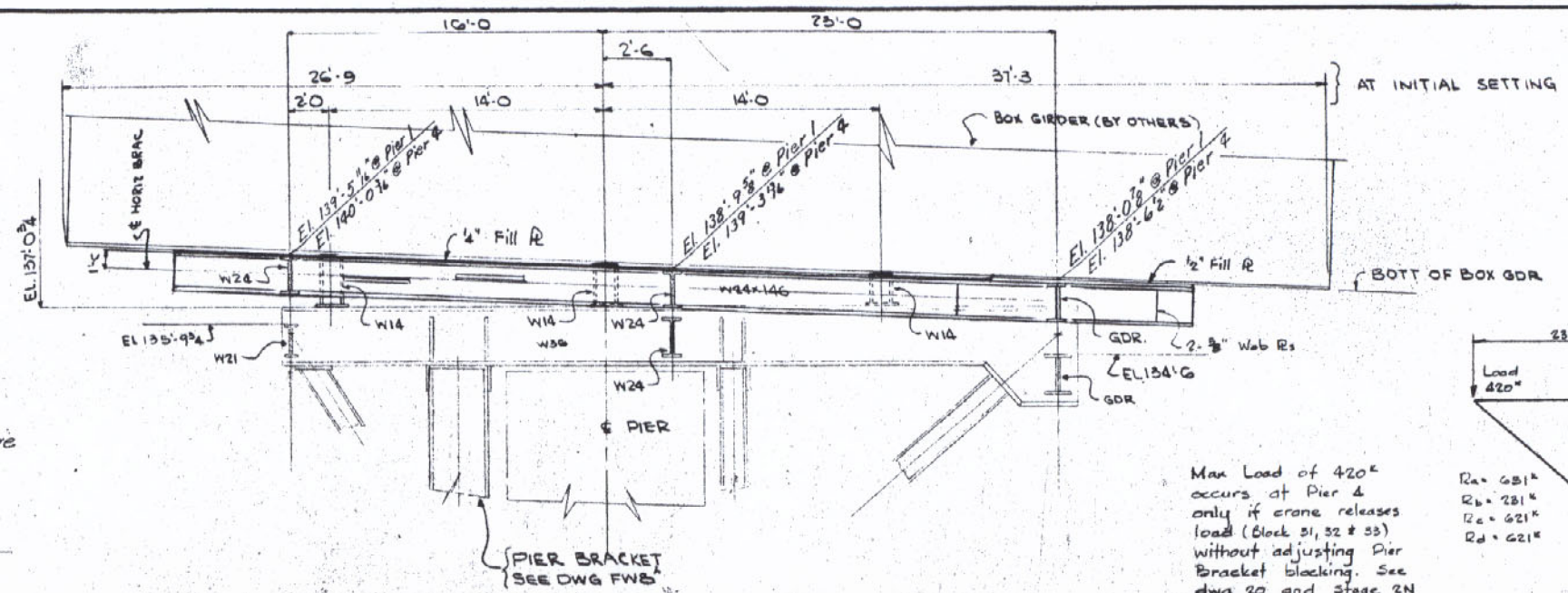

SECTION "AA" (AS SHOWN)
SECTION "EE" (OPP HAND)

Max Load of 420ᵏ occurs at Pier 4 only if crane releases load (Block 31, 32 & 33) without adjusting Pier Bracket blocking. See dwg 20 and Stage 2N on EP12.

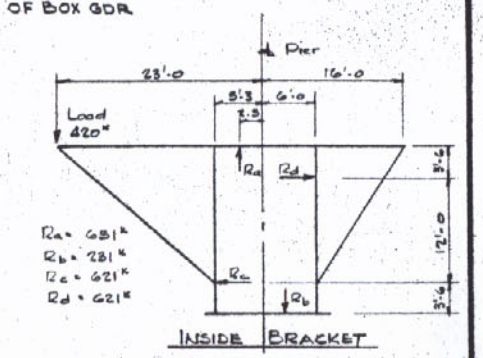

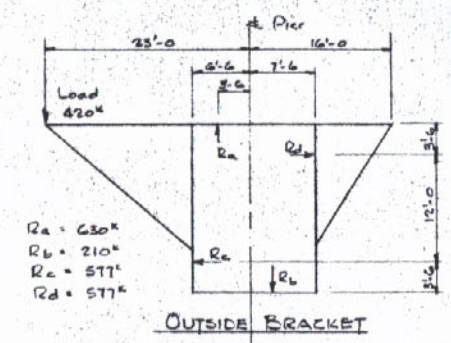

PIER BRACKET LOADS

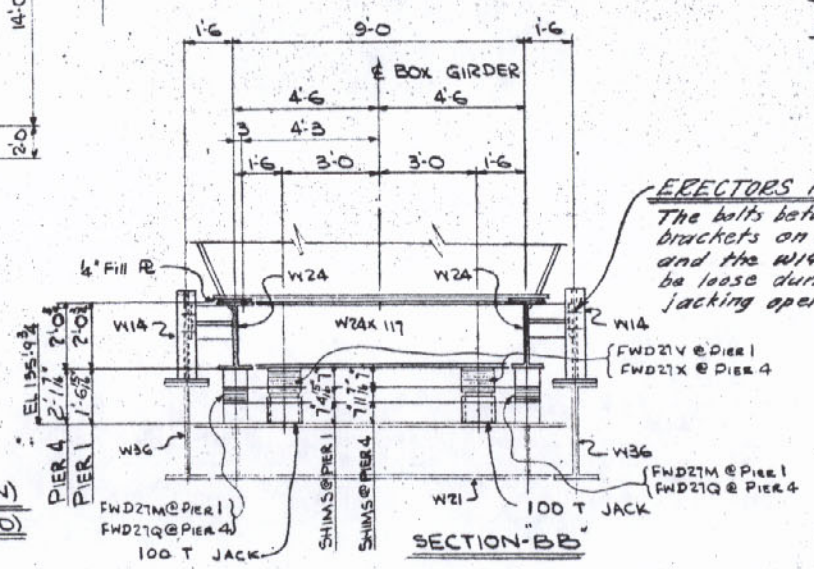

EREECTORS NOTE
The bolts between the brackets on the W24 beams and the W14 posts must be loose during any jacking operations. (Typ.)

SECTION "BB"

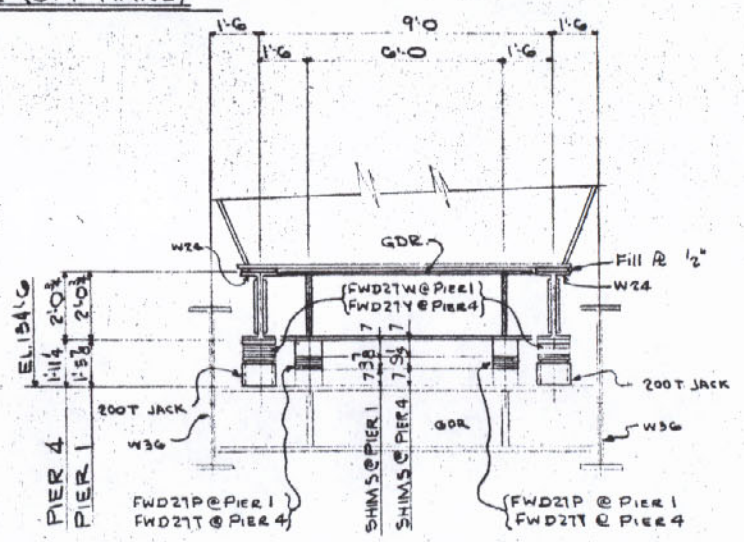

SECTION "DD"

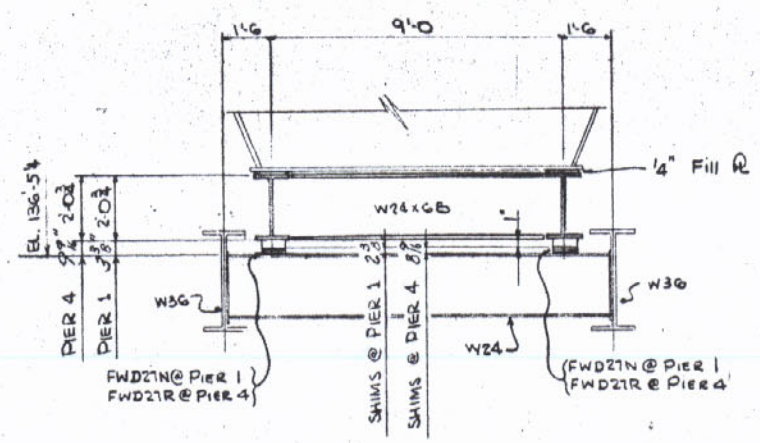

SECTION "CC"

NOTE:
TWO (2) JACKING BEAM ASSEMBLIES ARE REQUIRED AT EACH PIER (PIER 1 & PIER 4). QUANTITIES SHOWN IN DETAILS ARE FOR BEAMS AT ONE (1) PIER ONLY.

APPROVED
For Design, Material & Workmanship
Frankland & Lienhard
By E.S. 1-25-1980

WORK THIS DWG WITH DWG FW8

APPROVED
LOUIS A. GARRIDO
BRIDGE DESIGN ENGINEER
JAN 2 9 1980
By R.E.B.

NOTE
The bearing link plates at Piers 1 and 4 will be erected with the lower portion of the box girder as noted on dwg 19.

RECEIVED
DEC 10 1979

REVISIONS	DATE
Incl Erg Link Wbs	12/6/79
Cracked Loads & Fill Plates	1/16/79
Per Review	8/31/78
Per	7/25/78

BRIDGE OVER MISS. RIVER
LULING, LOUISIANA

LASH PROJECT 450-37-02

JACKING BEAMS FOR TEMPORARY SUPPORT BRACKET AT PIERS 1 & 4

THE MELBOURNE BROS. CONSTRUCTION CO.
NORTH CANTON OHIO

JOB NO. | DATE | SHEET NO. FW9 OF

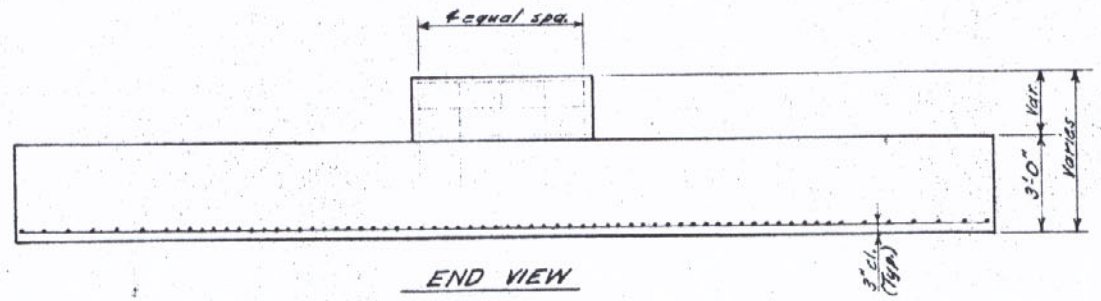

END VIEW

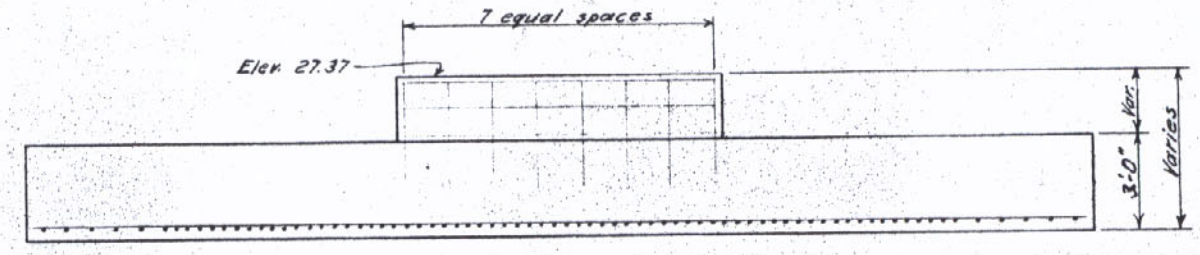

SIDE VIEW

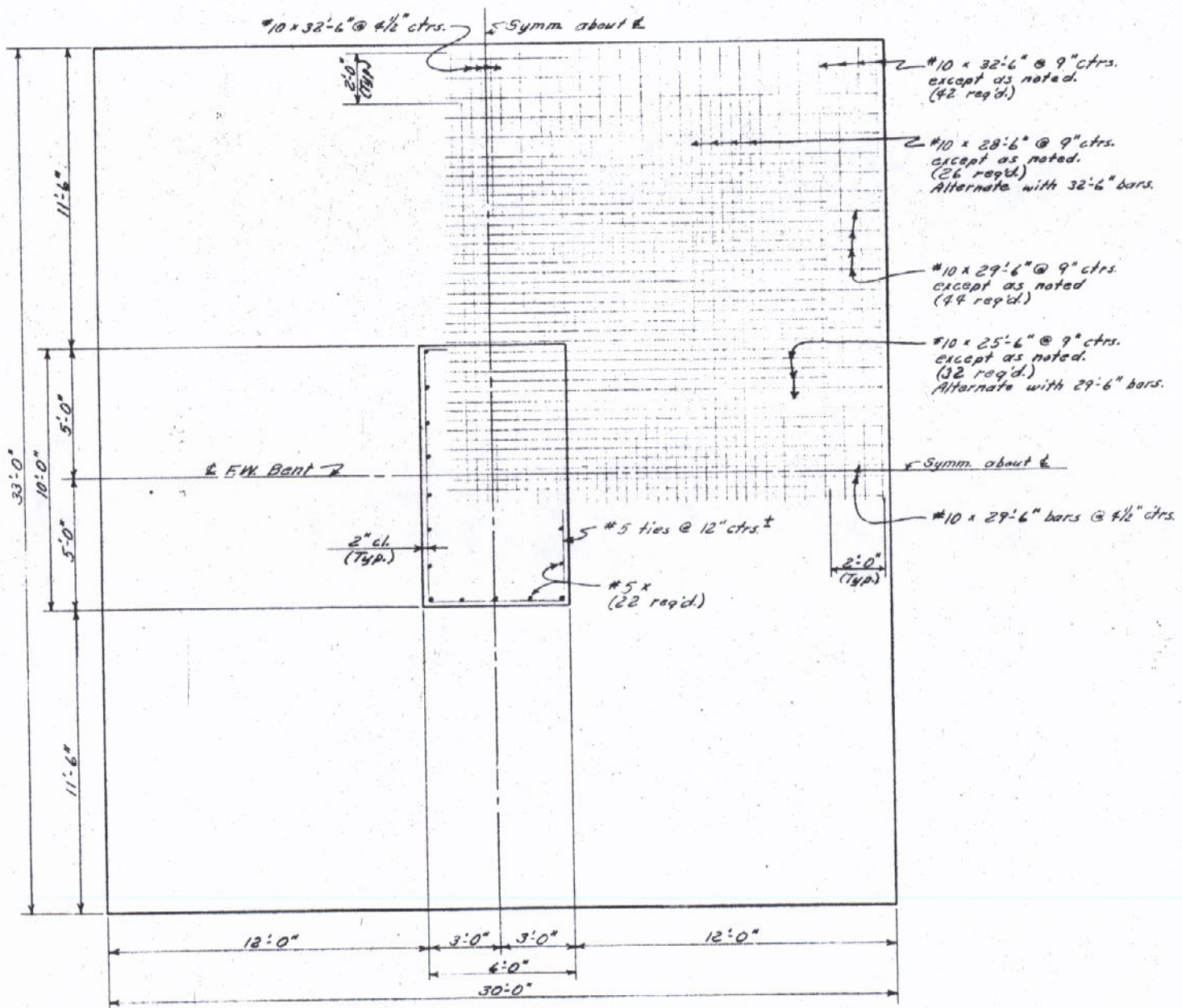

PLAN

NOTES

1) Concrete to be 3000 psi. @ 28 days.
2) Reinforcing steel to be Grade 40. (20 ksi)

APPROVED
LOUIS A. GARRIDO
BRIDGE DESIGN ENGINEER
DEC 27 1979
By REB Date

*Orig. Drw'g. completely deleted.

REVISIONS	DATE
For Review	8/31/79
Redrawn *	7-11-79

BRIDGE OVER MISS. RIVER
LULING, LOUISIANA

L.A. S.H. PROJECT 450-37-02

CONCRETE FOOTING DETAILS FOR FALSEWORK BENT FW-3

THE MELBOURNE BROS. CONSTRUCTION CO.
NORTH CANTON OHIO

JOB NO. 1429 DATE 5 MARCH '79

SHEET NO. FWD 9 OF

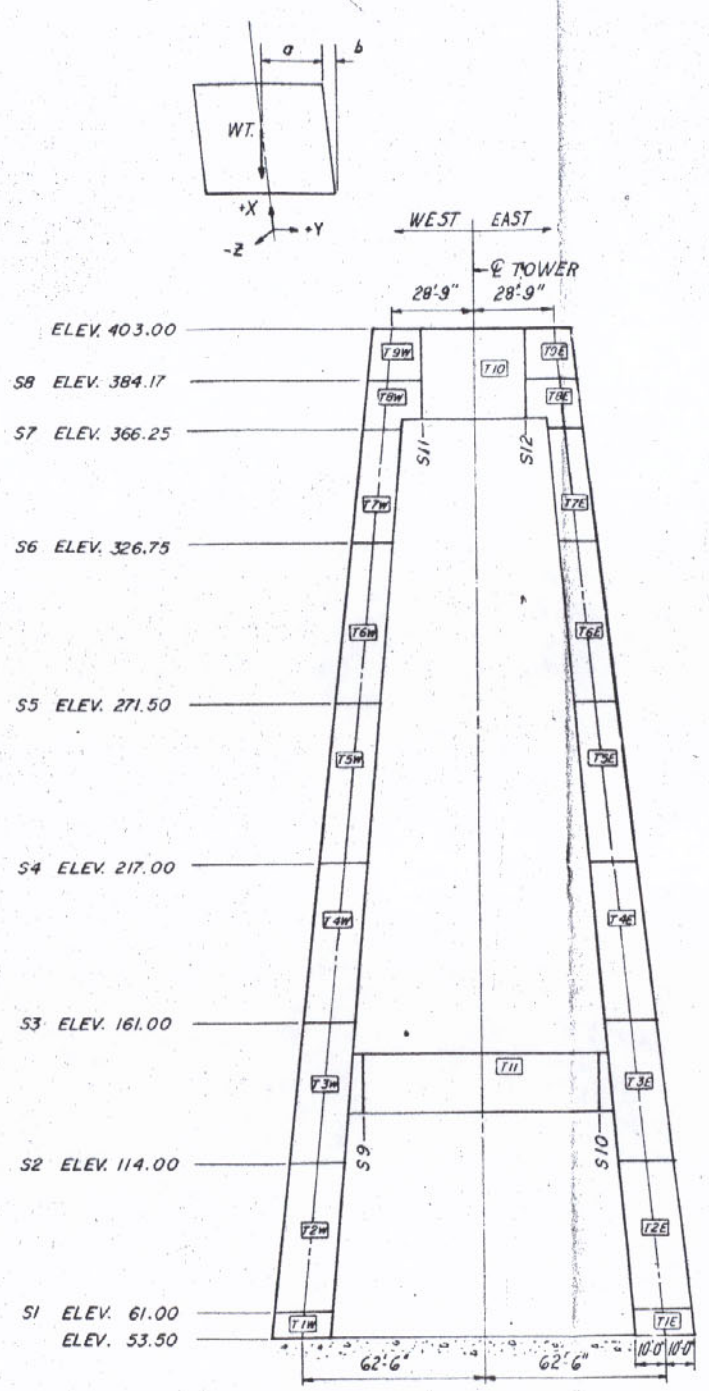

TOWER ELEVATION

SCALE: 1" = 30'-0"

TOWER QUANTITIES											
BLOCK	A_{BOT} IN²	A_{TOP} IN²	$I_{YY\ BOT}$ IN⁴	$I_{ZZ\ BOT}$ IN⁴	$I_{YY\ TOP}$ IN⁴	$I_{ZZ\ TOP}$ IN⁴	$I_{X\ BOT}$ IN⁴	$I_{X\ TOP}$ IN⁴	WT. KIP	a
T1	1,697.53	1,684.35	16,898,361.7	10,694,801.0	16,388,910.2	10,434,337.1	13,077,837.3	12,701,998.7	219.79	9'-6 1/2"
T2	1,684.35	1,591.22	16,388,910.2	10,434,337.1	13,070,909.2	8,713,901.0	12,701,998.7	10,246,104.1	325.88	6'-5 13/16"
T3	1,591.22	1,094.44	13,070,909.2	8,713,901.0	8,942,885.5	6,807,867.5	10,246,104.1	7,884,667.2	284.37	6'-8 9/16"
T11	771.75		2,941,110.8	5,989,186.2			3,005,894.9		289.176[3]	41'-1 9/16"
T4	1,094.44	1018.08	8,942,885.5	6,807,867.5	6,817,463.3	5,506,668.2	7,884,667.2	6,074,383.3	226.15	5'-8 5/16"
T5	1,018.08	950.58	6,817,463.3	5,506,668.2	5,095,156.0	4,410,891.0	6,074,383.3	4,594,851.0	204.72	5'-2 9/16"
T6	950.58	875.15	5,095,156.0	4,410,891.0	3,636,852.7	3,457,334.3	4,594,851.0	3,355,087.6	192.42	4'-10 13/16"
T7	875.15	1,130.94	3,636,852.7	3,457,334.3	4,698,223.1	4,043,206.5	3,355,087.6	4,478,258.1	137.19	4'-11 3/8"
T8	1,130.94	1,104.44	4,698,223.1	4,043,206.5	4,168,037.0*	3,705,272.3*	4,478,258.1	3,997,620.4[1]	168.99 [1]	6'-4"
* T9	1,104.44*	880.00*	4,168,037.0*	3,705,272.3*	2,795,161.4*	3,111,787.1*	3,997,620.4*	3,468,176.7*	145.55[2]	5'-10 3/4"
T10	1,246.77		5,548,743.0	18,035,964.7			11,011,018.3		173.05	17'-11"

* SHAFT ONLY
1 SADDLE C WT. OF 42.51* INCLUDED; SADDLE B WT. EXCLUDED
2 SADDLE A WT. OF 44.50* INCLUDED
3 WIND SHEAR LOCK AND BEARING DEVICE WT. EXCLUDED
4 SPLICE B PROPERTIES GIVEN AT ELEV 383.00

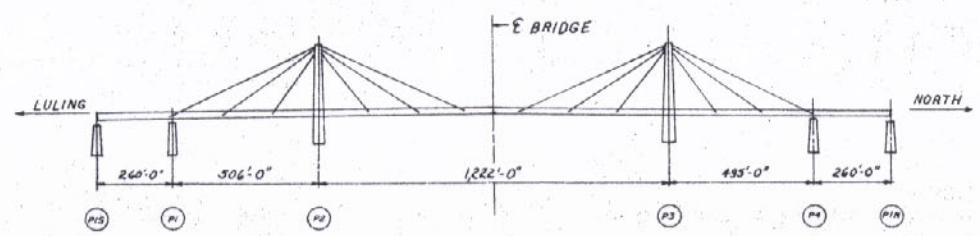

BRIDGE ELEVATION

NO SCALE

GENERAL NOTES

1. The towers will be erected with a Manitowoc 4600 platform ringer, barge-mounted crane.
2. Both towers will be erected simultaneously. Upon placement of both tower legs at one tower splice elevation, similar erection fit-up will begin at the other tower.
3. At least 10% of the splice bolt holes shall be filled with pins and 5% of the splice bolts shall be in place before releasing the crane from the fit-up operation. All of the bolts will be in place and tightened one splice point below any erection fit-up tower splice location.
4. The anchor bolt nuts will be tightened using a horizontal hydraulic jack operating on a wrench. The first 5 bolts tightened will be measured for the 150 kip minimum stress using an extensometer. The extensometer readings will be correlated with the pressure gauge on the hydraulic jack to determine the jacking force required. Extensometer readings will then be taken on every 10th anchor bolt for verification of the procedure.

STAGE 1

Set blocks T1E and T1W. Begin tightening the anchor bolt nuts to a minimum load of 150 kips per bolt. A minimum of 25% of the anchor bolts will be tightened before beginning Stage 2.

STAGE 2

Set blocks T2E and T2W. A minimum of 50% of the anchor bolts shall be tightened to 150 kips per bolt before beginning Stage 3.

STAGE 3

Set blocks T3E and T3W. A minimum of 75% of the anchor bolts shall be tightened to 150 kips per bolt before beginning Stage 4.

STAGE 4

Set block T11. All of the anchor bolts shall be in place and tightened to 150 kips per bolt before beginning Stage 5.

STAGE 5 THRU 8

Set blocks T4E and T4W thru T7E and T7W.

STAGE 9

Place jacking strut below Elevation 366.25. Set blocks T8E and T8W. Set cable saddle 9.

STAGE 10

Set block T9E and T9W.

STAGE 11

Jack horizontally at the jacking strut to spread the upper strut, block T10 splice locations apart. Place block T10 and complete bolting.

STAGE 12

Place the temporary saddles on the top of blocks 9E and 9W, and place the stiff-leg derrick on the upper strut.

APPROVED
LOUIS A. GARRIDO
BRIDGE DESIGN ENGINEER
By RCB Date 6-19-78

APPROVED
For Design, Material & Workmanship

Frankland & Lienhard
By E. S. 6-19-78

RECEIVED JUN 14 1978

ERECTOR
THE MELBOURNE BROTHERS CONSTRUCTION CO.
P.O. Box 2251 North Canton, Ohio 44720 216-494-1833

Owner - State of Louisiana
General Contractor - Williams Brothers Construction Co., Inc
Fabricator - Ishikawajima - Harima Heavy Industries Co., Ltd.

TOWER ERECTION PROCEDURE

MISSISSIPPI RIVER BRIDGE (LULING)
MAINRIVER CROSSING SUPERSTRUCTURE
St. Charles Parish State Project No. 450-37-02

Date	Description	by
5-22-78	SB ELEV. AND TOWER PROPERTIES	MGN

Date 4-18-78 | Scale AS SHOWN | Sheet No. E.P.-1
Drawn MGN | Checked | Approved

HNTB
HOWARD NEEDLES TAMMEN & BERGENDOFF

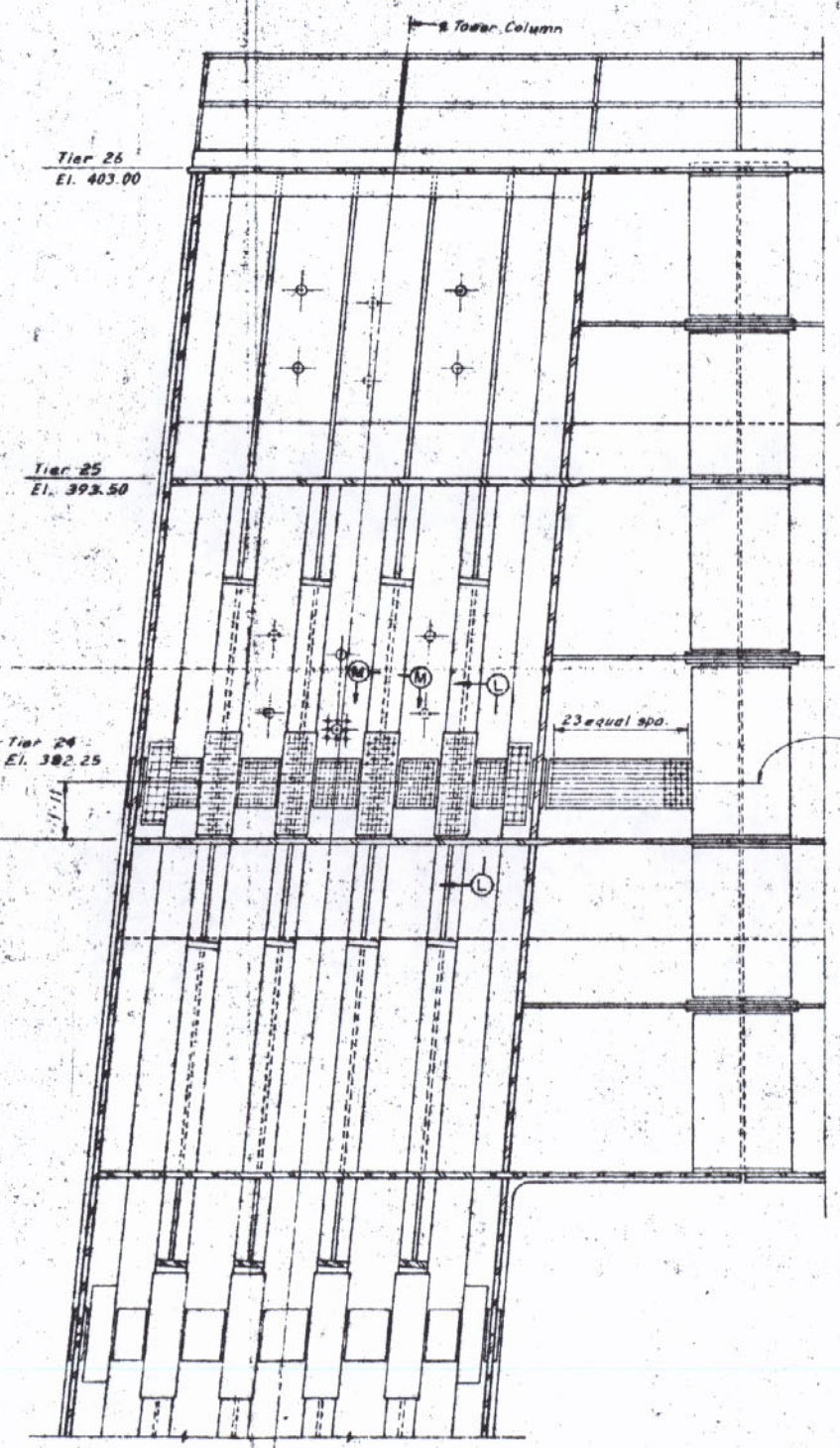

SECTION A-A
Scale: 3/8" = 1'-0"

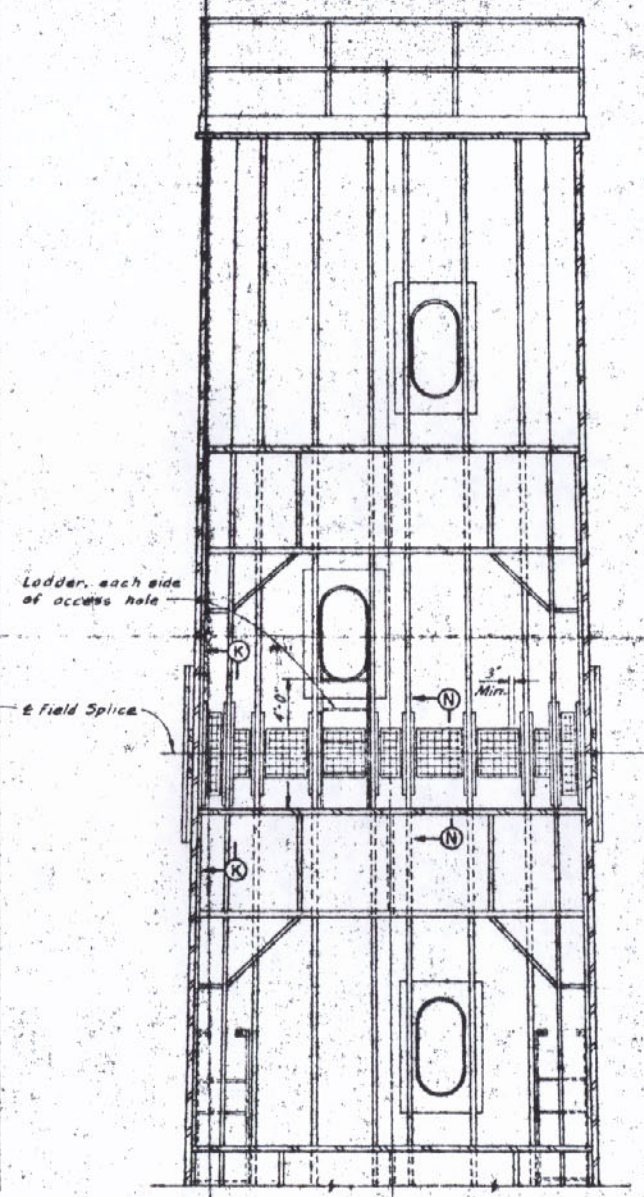

SECTION B-B
Scale: 3/8" = 1'-0"

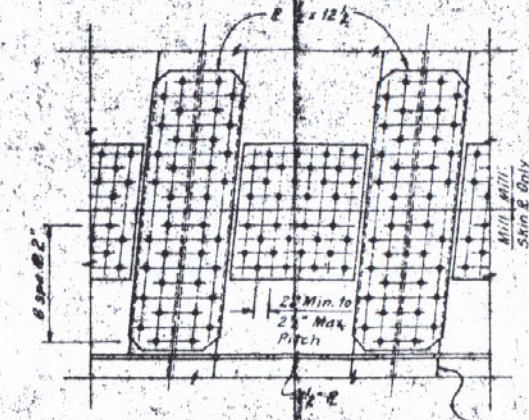

SECTION K-K
Scale: 1" = 1'-0"

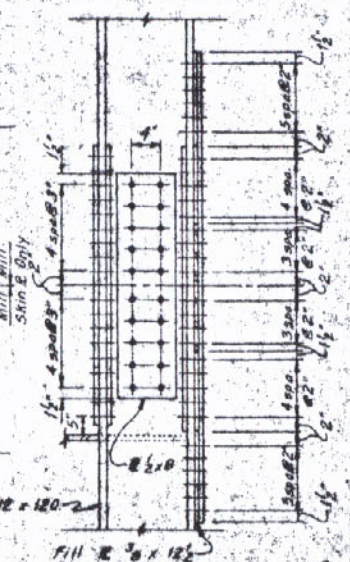

SECTION L-L
Scale: 1" = 1'-0"

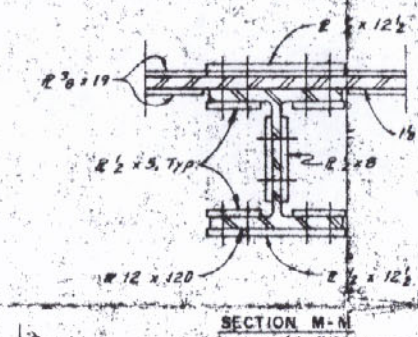

SECTION M-N
Scale: 1 1/2" = 1'-0"

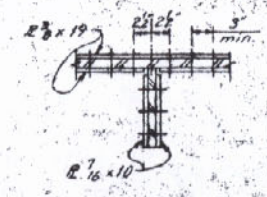

SECTION P-P
Scale: 1" = 1'-0"

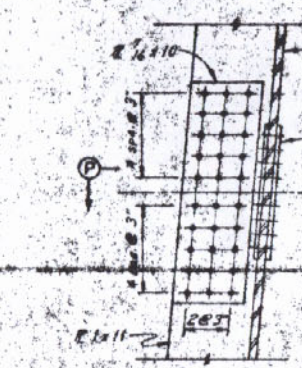

SECTION N-N
Scale: 1" = 1'-0"

GENERAL NOTES:

This drawing is to be worked with Sheet 37 (Towers Tiers 22, 23, 24 and 25) of the contract plans.

The splice shall conform to the Standard Specifications for Highway Bridges, 12 Edition, 1977, as adopted by AASHTO.

All structural metalwork shall be high strength, low alloy ASTM-A588 weathering steel.

Splice connections shall be made with 7/8" diameter high strength bolts. One washer will be required beneath the turning element. Bolts, washers and nuts shall have atmospheric corrosion resistance and weathering characteristics compatible with the splice plates.

APPROVED
For Design, Material & Workmanship
MAY - 9 1978
Frankland & Lienhard
By E. C.

RECEIVED
MAY 1978

ERECTOR
THE MELBOURNE BROTHERS CONSTRUCTION CO.
P.O. Box 2251, North Canton, Ohio 44720 216-494-1833

Owner - State of Louisiana
General Contractor - Williams Brothers Construction Co., Inc.
Fabricator - Ishikawajima - Harima Heavy Industries Co., Ltd.

TOWER SPLICE S-8

MISSISSIPPI RIVER BRIDGE (LULING)
MAINRIVER CROSSING SUPERSTRUCTURE

Date	Description	By

Date 4-28-78 | Scale As Shown | Sheet No. EP2

HNTB
HOWARD NEEDLES TAMMEN & BERGENDOFF

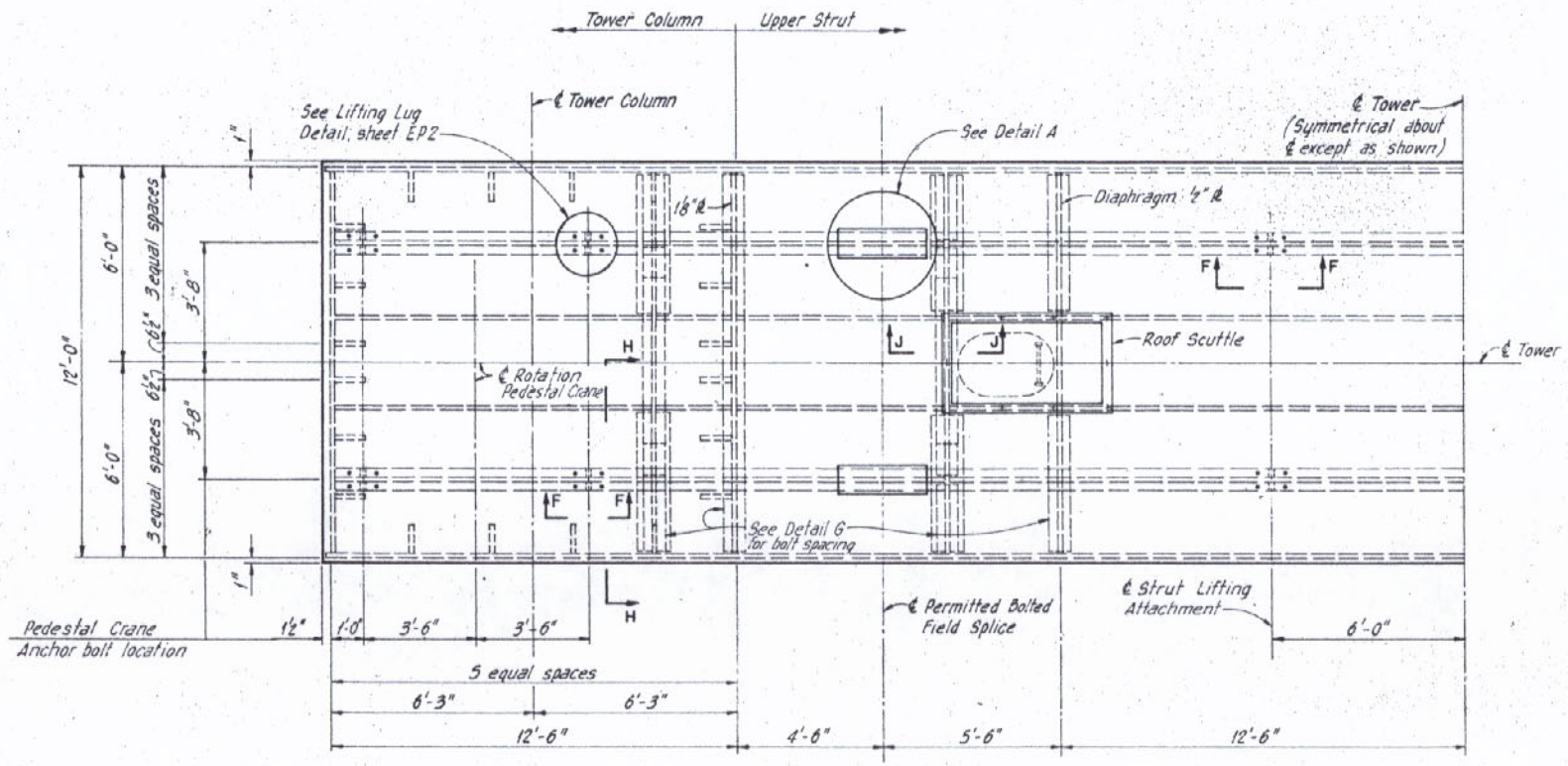

PLAN— TOWER TIER 26
Scale: ⅜"=1'-0"

Note: All dimensions given in this detail are measured at the top of the roof plate, Elev. 403.00
See Sheet No 32 for permanent top skin plate splice details

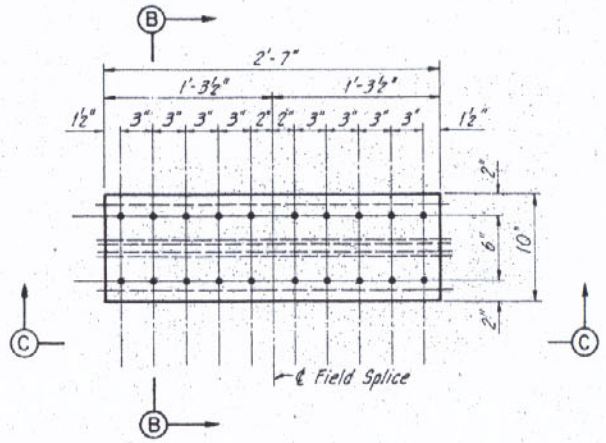

DETAIL A
Scale: 1½"=1'-0"

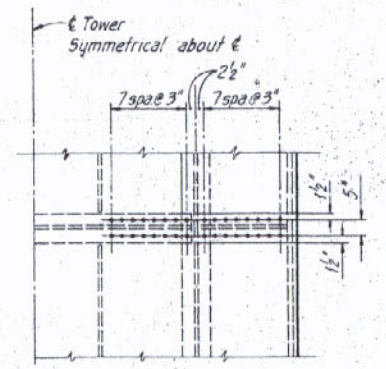

DETAIL G
Scale: ½"=1'-0"

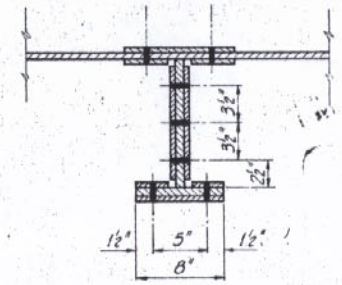

SECTION B-B
Scale: 1½"=1'-0"

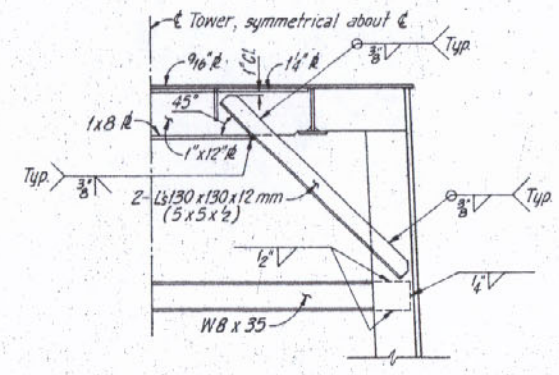

VIEW H-H
Scale: ½"=1'-0"

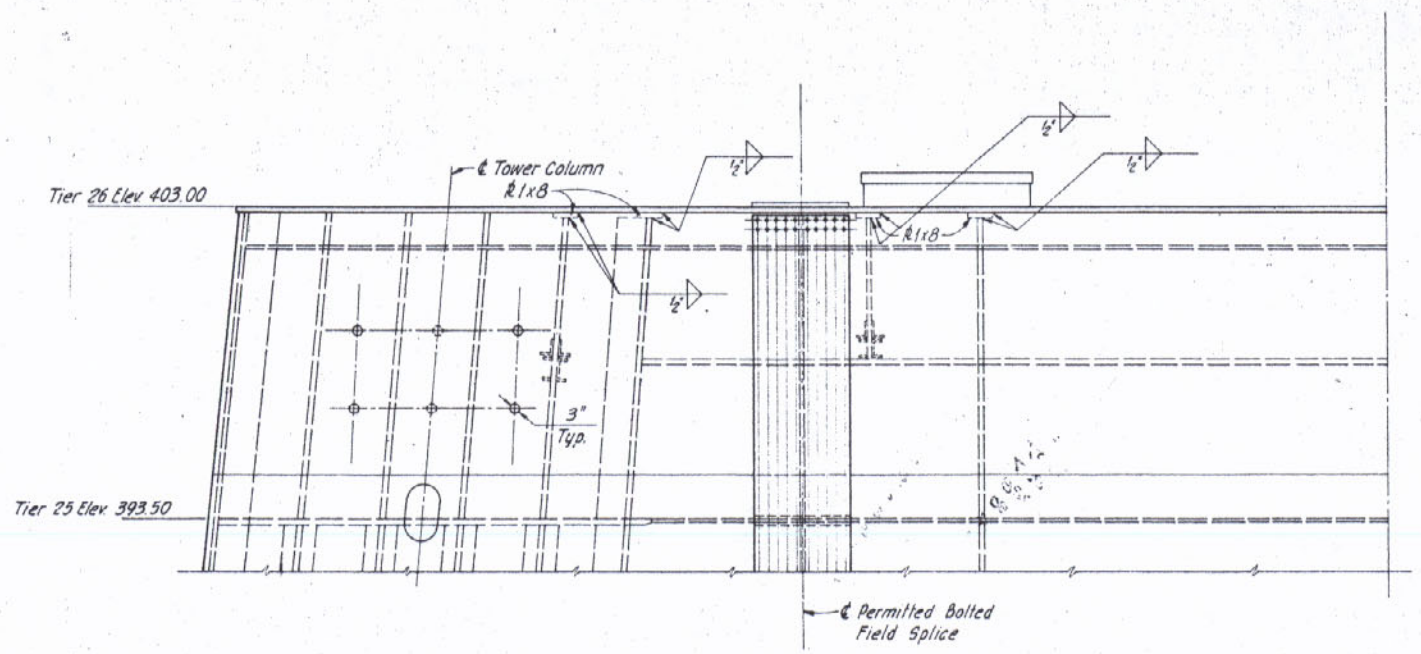

ELEVATION
Scale: ⅜"=1'-0"

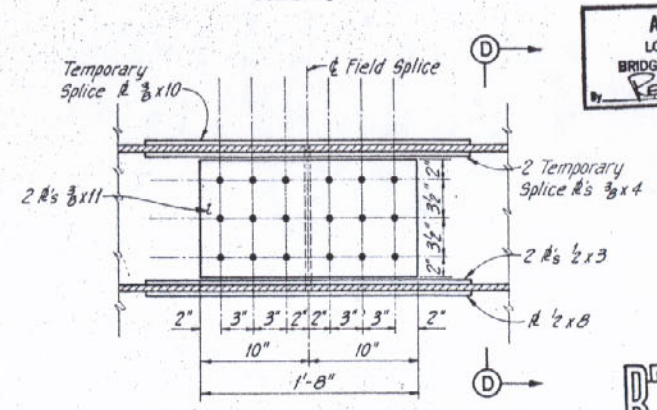

VIEW C-C
Scale: 1½"=1'-0"

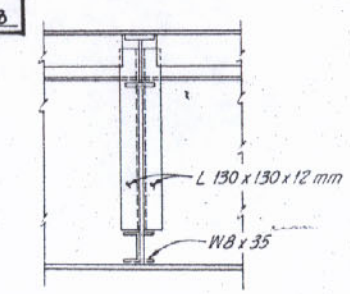

VIEW J-J
Scale: ½"=1'-0"
Note: See View H-H for details not shown.

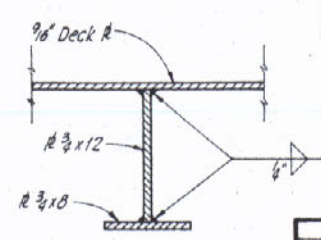

SECTION D-D

APPROVED
LOUIS A. GARRIDO
BRIDGE DESIGN ENGINEER
By FEB Date 9/14/78

RECEIVED
SEP 8 1978

APPROVED
For Design, Material & Workmanship
Frankland & Llenhard
By R.K. 9-14-78

STATE OF LOUISIANA
DANIEL J. WATKINS
REG. NO. 13134
REGISTERED PROFESSIONAL ENGINEER IN CIVIL ENGINEERING

Date	Description	by
	Revisions	

ERECTOR
THE MELBOURNE BROTHERS CONSTRUCTION CO.
P.O. Box 2251 North Canton, Ohio 44720 216-494-1833

Owner - State of Louisiana
General Contractor - Williams Brothers Construction Co., Inc.
Fabricator - Ishikawajima - Harima Heavy Industries Co., Ltd.

TOWER ERECTION DETAILS

MISSISSIPPI RIVER BRIDGE (LULING)
MAINRIVER CROSSING SUPERSTRUCTURE
St. Charles Parish State Project No. 450-37-02

Date 7-7-78	Scale As Shown	Sheet No. E.D.3
Made By	Chkd by	Approd by

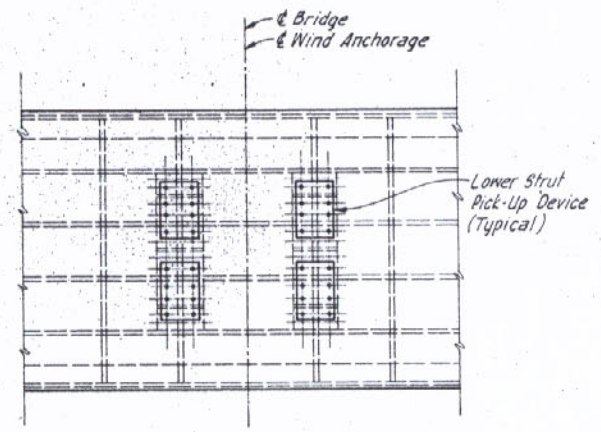

PARTIAL PLAN-LOWER TOWER STRUT

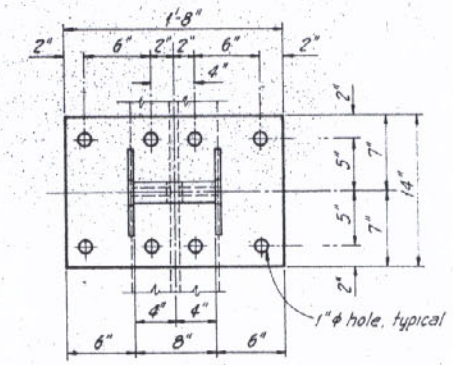

LIFTING LUG DETAIL
Scale: 1½"=1'-0"

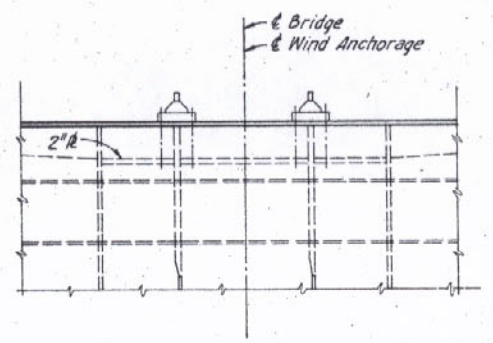

PARTIAL ELEVATION-LOWER TOWER STRUT

For details of lower strut see Contract Drawing 39.

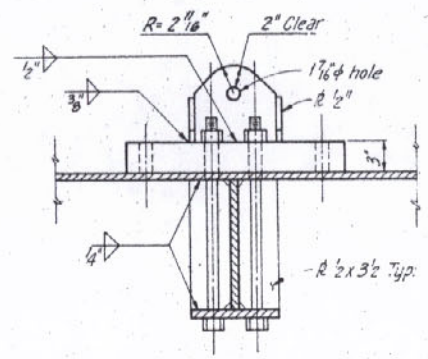

VIEW E-E
Scale: 1½"=1'-0"

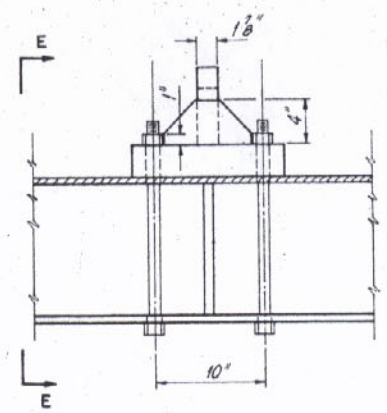

VIEW F-F
Scale: 1½"=1'-0"

Note: For location of Lifting Lug Detail, View F-F see sheet EP3.

DEAD LOAD DEFLECTION OF TOWER LEGS										
ELEV.	CONSTRUCTION STAGE									
	11	10	9	8	7	6	5	4	3	2
61.0	-0.000	-0.000	-0.000	-0.000	-0.000	-0.000	-0.000	-0.000	-0.000	-0.000
114.0	-0.000	-0.001	-0.001	-0.001	-0.001	-0.000	-0.000	+0.000	+0.002	+0.001
161.0	+0.001	+0.006	+0.005	+0.004	+0.003	+0.002	+0.001	+0.000	+0.005	
217.0	+0.004	+0.037	+0.030	+0.024	+0.016	+0.008	+0.003			
271.5	+0.005	+0.087	+0.070	+0.055	+0.035	+0.016				
326.75	+0.003	+0.152	+0.121	+0.093	+0.057					
366.25	+0.001	+0.202	+0.159	+0.121						
403.0	-0.001	+0.251								

Note: Dimensions shown are in feet and represent the horizontal displacement of the field splice from the zero stress position. +dimensions are toward the bridge centerline. See sheet EP1 for construction stages.

CRITERIA FOR TOWER MOUNTED CRANES

1. One pedestal-mounted crane is to be mounted on each tower leg.
2. Weight of crane equals 24 kips.
3. Allowable lifting capacity = 40 kips.
4. Maximum overturning moment about centerlines of rotation of derrick equals 487.57 ft. kips.

GENERAL NOTES:

Details shall conform to the Standard Specifications for Highway Bridges, 12 Edition, 1977 and pertinent interim specifications as adopted by AASHTO.

All structural metalwork shall be high-strength low-alloy ASTM A588 weathering steel.

All bolts shall be 1" diameter ASTM A325. Holes for temporary fixings shall be filled with high-strength bolts with one washer over the exposed side of the tower skin plate after removing the fixing. Bolts, washers and nuts shall have atmospheric corrosion resistance and weathering characteristics compatible with the tower skin plate.

UPPER TOWER STRUT SPLICING SEQUENCE

1. With upper strut in position, make stiffener splice at top skin plate (see Detail A).
2. Place top splice plates for bottom skin plate between center ¾ x 9 plate stiffeners and fill holes with drift pins.
3. Release strut from lifting cranes.
4. Make vertical skin plate splices.
5. Make bottom skin plate splices.
6. Remove top flange splice of top skin plate stiffener and make splices for top skin plate.

APPROVED
LOUIS A. GARRIDO
BRIDGE DESIGN ENGINEER
By EB Date 9/14/78

APPROVED
For Design, Material & Workmanship
Frankland & Lienhard
By R.K. 9-14-78

STATE OF LOUISIANA
DANIEL J. WATKINS
REG. NO. 13134
REGISTERED PROFESSIONAL ENGINEER IN CIVIL ENGINEERING

Date	Description	by
24-8-78	SHEET NUMBER & PIN HOLE SIZE	MGN

ERECTOR
THE MELBOURNE BROTHERS CONSTRUCTION CO.
P.O. Box 2251 North Canton, Ohio 44720 216-494-1833

Owner - State of Louisiana
General Contractor - Williams Brothers Construction Co., Inc.
Fabricator - Ishikawajima - Harima Heavy Industries Co., Ltd

TOWER ERECTION DETAILS

MISSISSIPPI RIVER BRIDGE (LULING)
MAINRIVER CROSSING SUPERSTRUCTURE
St. Charles Parish State Project No. 450-37-02

Date 7-7-78 | Scale As Shown | Sheet No. EP4

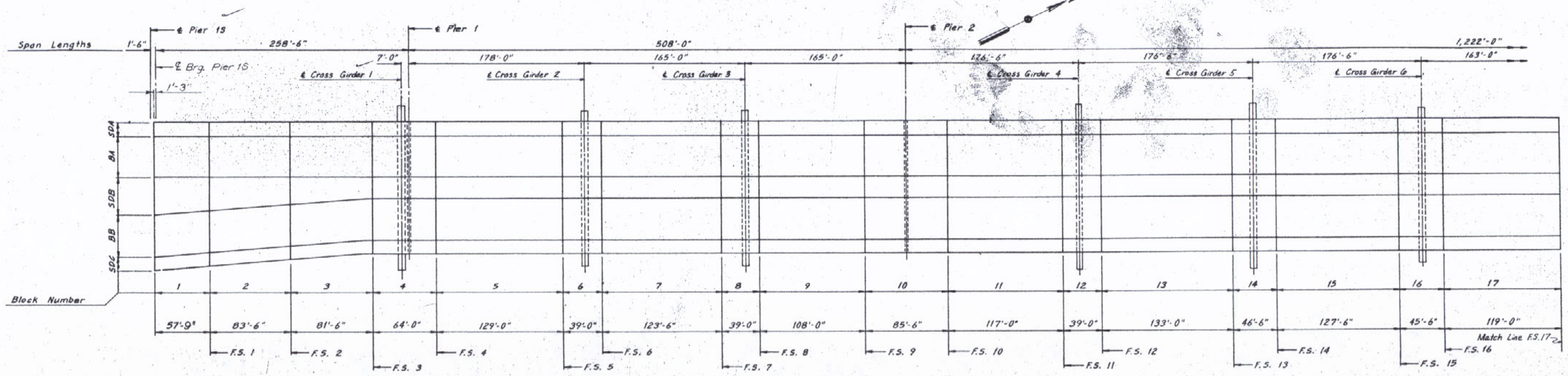

BLOCK LIFT WEIGHTS

BLOCK NUMBER	1	2	3	4	5	6	7	8	9	10	11	12	13	14	15	16	17
WEIGHT SIDE DECK SDA or SDC (1)	18,410*	26,790	25,820	20,680	41,250	12,210	39,290	12,590	34,360	27,380	37,390	12,210	42,080	14,790	40,470	14,500	38,340
DISTANCE TO CENTER OF GRAVITY (3)	28'-10½"*	41'-9"	40'-9"*	32'-0"	64'-6"	19'-6"	61'-9"	19'-6"	54'-0"	42'-9"	59'-6"	19'-6"	66'-6"	23'-3"	63'-9"	22'-9"	59'-6"
WEIGHT BOX GIRDER BA or BB (1)	136,180*	189,040	185,210	634,070*	330,980	327,540*	313,650	310,350*	286,110	244,930	296,030*	324,560*	347,540	521,560*	307,550	385,730*	303,440
DISTANCE TO CENTER OF GRAVITY (3)	25'-11⅞"*	41'-9⅛"	41'-5⅜"	28'-10⅜"	64'-6⅛"	19'-12"	60'-11¼"	21'-3⅜"	52'-4¼"*	42'-8⅝"	57'-11"	18'-10½"	66'-6¼"	23'-9⅜"	63'-11¾"	25'-8⅜"	59'-6"
WEIGHT CENTER DECK SDB	49,460*	60,880	50,890	33,430	52,950	17,010	56,800	17,010	49,860	42,720	54,260	17,010	61,400	21,310	57,880	20,920	55,920
DISTANCE TO CENTER OF GRAVITY (3)	24'-9⅜"*	40'-3¼"	37'-6⅜"	32'-10⅜"	64'-6⅛"	19'-6"	60'-10⅝"	19'-6"	54'-3⅞"	42'-5⅜"	57'-10⅝"	19'-6"	66'-6"	24'-6⅛"	64'-0⅜"	21'-6¼"	59'-6"
WEIGHT DIAPHRAGMS (4)	21,320	11,430	8,860	14,630	12,340	--	12,340	--	12,340	12,340	12,340	--	12,340	4,110	8,230	4,110	12,340
WEIGHT CURB (1)	9,240	13,310	12,990	10,200	20,560	6,220	19,690	6,220	17,220	13,330	18,650	6,220	21,200	7,410	20,320	7,290	18,970
WEIGHT MEDIAN	10,240	14,750	14,400	11,310	22,790	6,890	21,820	6,890	19,080	15,110	20,670	6,890	23,500	8,220	22,530	8,040	21,030
WEIGHT FAIRING PIECE (1)	--	--	--	--	--	--	--	--	--	11,540	43,500	14,600	49,800	17,410	47,740	17,040	44,550
WEIGHT LONGITUDINAL SPLICE PLATES (7)	9,750	14,010	13,670	10,760	21,880	6,490	20,940	6,490	18,280	13,930	19,820	6,490	22,560	7,770	21,620	7,600	20,170
WEIGHT TRANSVERSE SPLICE PLATES (7)	19,160	19,070	20,840	25,200	23,580	23,580	23,580	29,310	21,710	21,710	22,910	22,910	31,330	22,340	22,340	31,000	31,000
WEIGHT DIAPH. & FLOORBEAM SPLICES (7)	10,470	9,930	8,220	10,140	13,390	1,420	12,680	2,120	11,970	10,550	13,390	1,420	13,330	4,460	10,340	4,460	13,390
CROSS GIRDER SPLICE (7)	--	--	--	31,510	--	10,620	--	12,030	--	--	--	11,320	--	31,840	--	16,650	--
GRAND TOTAL	448,020	587,350	564,920	1,466,880	938,570	757,950	898,420	732,100	808,620	713,120	935,110	758,820	1,055,760	1,222,390	975,100	941,920	964,450

Note: Transverse deck field splice #1 is included with Block #1, Field splice #2 is included with Block #2, etc.
(1) Indicates one member only
(2) Includes weight of ½ cross girder + support plates
(3) South half sections measured from left edge of section.
(4) Additional middle pieces present in intermediate & bearing diaphragms.
(5) Length equals 57'-9"
(6) Length equals 56'-3"
(7) Includes weight of bolts

HNTB
HOWARD NEEDLES TAMMEN & BERGENDOFF

REVIEWED BY
FRANKLAND & MERNARD
CONSULTING ENGINEERS
DATE 10-10-80
BY E.S.

STATE OF LOUISIANA
DANIEL J. WATKINS
REG. NO. 13134
REGISTERED
PROFESSIONAL ENGINEER
IN
CIVIL ENGINEERING

APPROVED
LOUIS A. GARRIDO
BRIDGE DESIGN ENGINEER
By REB Date SEP 14 1980

RECEIVED
OCT 7 1980

Date	Description	By
	Revisions	

ERECTOR
THE MELBOURNE BROTHERS CONSTRUCTION CO.
P.O. Box 2251 North Canton, Ohio 44720 216-494-1833

Owner - State of Louisiana
General Contractor - Williams Brothers Construction Co., Inc
Fabricator - Ishikawajima - Harima Heavy Industries Co. Ltd

BOX GIRDER WEIGHTS

MISSISSIPPI RIVER BRIDGE (LULING)
MAINRIVER CROSSING SUPERSTRUCTURE
St. Charles Parish State Project No. 450-37-02

Date 5-17-78	Scale 1"=50'-0"	Sheet No. EP 10
Made By JRE	Chkd by MGN	Apprvd by

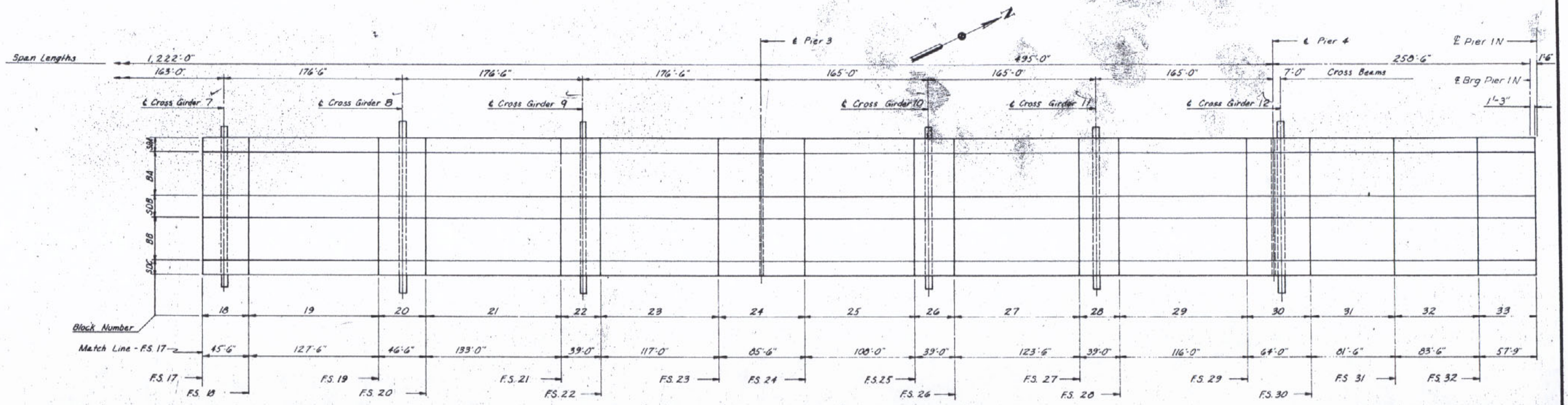

BLOCK LIFT WEIGHTS

BLOCK NUMBER	18	19	20	21	22	23	24	25	26	27	28	29	30	31	32	33
WEIGHT SIDE DECK SDA or SDC (1)	14,500	40,470	14,790	42,080	12,210	37,380	27,350	34,360	12,590	39,290	12,210	37,090	20,650	25,820	26,790	16,660
DISTANCE TO CENTER OF GRAVITY (3)	22'-9"	63'-9"	23'-3"	66'-6"	19'-6"	58'-6"	42'-9"	54'-0"	19'-6"	61'-9"	19'-6"	58'-0"	32'-0"	40'-9"	41'-9"	26'-1 1/8"
WEIGHT BOX GIRDER BA or BB (1)	355,730	307,350	321,560	347,540	334,360	296,030	244,930	286,110	305,260	314,770	327,540	296,300	634,070	184,410	185,140	134,710
DISTANCE TO CENTER OF GRAVITY (3)	25'-8 3/8"	63'-11 1/4"	23'-9 3/8"	66'-6 1/4"	18'-10 1/4"	57'-11"	42'-8 13/16"	52'-4 1/4"	21'-4 3/8"	62'-0 3/8"	19'-1 1/2"	58'-7 3/8"	29'-10 3/8"	41'-2 3/8"	41'-10 3/8"	25'-8 5/8"
WEIGHT CENTER DECK SDB	20,920	37,880	21,310	61,400	17,010	54,260	42,720	49,860	17,010	56,800	17,010	53,860	33,430	37,250	38,910	23,560
DISTANCE TO CENTER OF GRAVITY (3)	21'-6 3/8"	64'-0 3/8"	24'-5 1/4"	66'-6"	19'-6"	57'-10 3/8"	42'-6 3/8"	54'-3 3/8"	19'-6"	62'-0 3/8"	19'-6"	58'-7 3/8"	32'-10 3/8"	41'-4 1/4"	41'-9 1/4"	26'-1 3/8"
WEIGHT DIAPHRAGMS (4)	4,110	8,230	4,110	12,340	--	12,340	13,840	12,340	--	12,340	--	12,340	14,630	8,230	8,230	14,830
WEIGHT CURB (1)	7,250	20,320	7,410	21,200	6,220	18,650	13,630	17,220	6,220	19,690	6,220	19,490	10,200	12,990	13,310	9,280
WEIGHT MEDIAN	8,040	22,530	5,220	23,500	6,890	20,670	15,110	19,090	6,890	21,820	6,590	20,500	11,310	14,400	14,750	10,280
WEIGHT FAIRING PIECE (1)	17,040	47,740	17,410	49,800	14,600	43,800	11,540	--	--	--	--	--	--	--	--	--
WEIGHT LONGITUDINAL SPLICE PLATES (7)	7,600	21,620	7,600	22,560	6,490	19,820	14,440	18,280	6,490	20,940	6,490	19,820	10,760	13,760	14,100	9,730
WEIGHT TRANSVERSE SPLICE PLATES (7)	22,340	22,340	31,330	22,910	22,910	21,710	21,710	29,310	23,580	23,580	23,580	25,200	20,840	18,980	19,160	--
WEIGHT DIAPH. & FLOORBEAM SPLICES (7)	4,460	10,340	4,460	13,390	1,420	12,650	10,850	11,970	2,120	12,680	1,420	12,680	10,140	8,220	8,930	10,420
CROSS GIRDER SPLICE (7)	16,650	--	31,540	--	11,320	--	--	--	12,030	--	10,620	--	31,510	--	--	--
GRAND TOTAL	933,160	975,100	1,231,210	1,077,340	788,820	933,200	713,630	816,220	716,260	895,660	757,950	848,160	1,462,520	347,280	554,560	390,120

Note: Transverse deck field splice #18 is included with Block #18, field splice #19 is included with Block #19, etc.
(1) Indicates one member only
(2) Includes weight of ½ cross girder + support plates
(3) North half section measured from right edge of section
(4) Additional middle pieces present in intermediate & bearing diaphragms
(5) Length of section equal to 52'-8"
(6) Length of section equal to 57'-9"
(7) Includes weight of bolts

REVIEWED BY
FRANKLIN & ASHWOOD
CONSULTING ENGINEERS
DATE 10-10-80
BY E.S.

APPROVED
LOUIS A. GARRIDO
BRIDGE DESIGN ENGINEER
By RFB Date SEP 14 1980

RECEIVED
OCT 7 1980

STATE OF LOUISIANA
DANIEL J. WATKINS
REG. NO. 13134
REGISTERED PROFESSIONAL ENGINEER
IN
CIVIL ENGINEERING

Date	Description	By
11-30-78	Cross Girder Numbers	

Revisions

ERECTOR
THE MELBOURNE BROTHERS CONSTRUCTION CO.
P.O. Box 2251 North Canton, Ohio 44720 216-494-1833

Owner - State of Louisiana
General Contractor - Williams Brothers Construction Co., Inc.
Fabricator - Ishikawajima - Harima Heavy Industries Co., Ltd.

BOX GIRDER WEIGHTS

MISSISSIPPI RIVER BRIDGE (LULING)
MAINRIVER CROSSING SUPERSTRUCTURE
St. Charles Parish State Project No. 450-37-02

Date 5-17-78 | Scale 1" = 50'-0" | Sheet No. EP 11
Made By JRE | Checked by MGN | Approved by

HNTB
HOWARD NEEDLES TAMMEN & BERGENDOFF

GENERAL NOTES:

1. Erection for the north half (Stages 1N thru Closure) and the south half (Stages 7S thru Closure) will be done using 1 Model 4600 Manitowoc Ringer, barge-mounted crane. The south half of the structure (Stage 1S thru Stage 7S) will be erected using 1 Model 1131Q American Crawler Guy Derrick on land.

2. Two 10-ton capacity pedestal cranes will be mounted on top of each tower for cable erection.

3. Four 600-ton and two 1000-ton hydraulic jacks will be used to stress the permanent cable strands. The strands will be placed in pairs, one at each end of the cross girder. In the following pattern: at Cross Girders 1, 4, 5, 8, 9 and 12 the top outside strands will be placed first, followed by the bottom outside, then the top inside and last the bottom inside strands. At Cross Girders 2, 3, 6, 7, 10 and 11 the top pair of strands will be placed first, followed by the bottom pair of strands.

4. Temporary cable stays will consist of up to four groups of multiple 0.6-inch 7-wire stress-relieved strands. Each group will be dead anchored at a "double-pin plate quick-connect" (see Sheets EP17 through EP21) and live anchored at temporary saddles on top of the pier towers. Each strand will be incrementally jacked to the specified stay load (see Sheet EP23). The stays will be partially unloaded by the jacking operation for the placement of the permanent stays. The stays will be released by reversing the jack-loading procedure. Each set of temporary stays will be made from new strands. See temporary stay erection drawings for details.

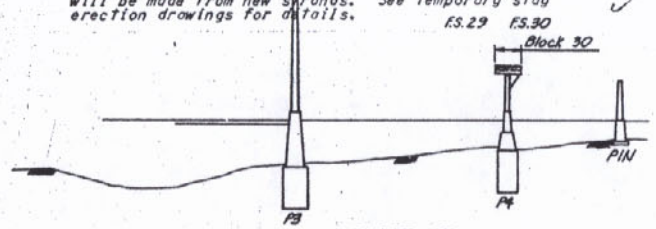

STAGE 1N

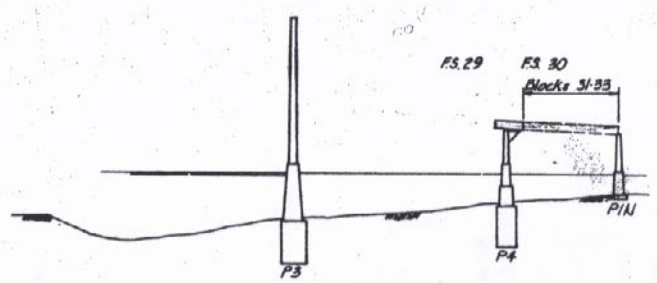

STAGE 2N

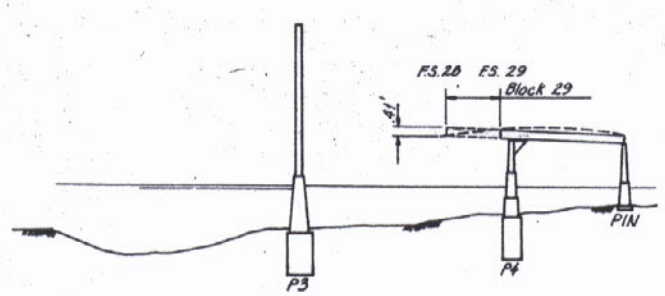

STAGE 3N

5. At least 50 percent of the transverse field splice holes shall be filled with bolts and pins before releasing the crane from the erection lift-up operation. Where cantilever construction of the longitudinal box girders is utilized over water, a pinned bearing plate connection will be used to allow quick release of the erection equipment. (See Sheets EP 17 thru EP 21 for location of "quick connects", splicing procedure and details.)

6. A work platform will travel on rollers bolted to the bottom flange of the box girders for bolting of the transverse and longitudinal splices.

7. All permanent bolts in the transverse splices of the erected blocks, except those bolts in the free end of the cantilever, shall be in place and tightened prior to the seating of any permanent cable strands.

8. For a plan of the block designations, field splice locations and lifting weights (see Sheets ES 10 and ES 11).

9. Cross girders are numbered 1 thru 12, see Sheets EP 10 and EP 11 for locations. All permanent stays are numbered to agree with the number of the cross girder at which they are anchored and are prefixed with the letter "MP". Temporary stays are prefixed with the letter "MT" and are numbered to agree with the field splice at which they are anchored.

10. All longitudinal splices shall have pins in at least 50 percent of the bolt holes prior to seating of the permanent stays. Longitudinal splices through the block containing the previous placed stay, of the same cantilever, shall be bolted 100 percent before placing the next stay.

Stage 1N Field Splice 29 to FS 30:

1. Place bracket on Pier 4 and blocking at Pier 4 Bearing EB2. See FW drawings for details.
2. Place pre-assembled Box Girder BA 30 and Cross Girder 12 on Pier 4. (Note: The upper half of BA 30 is not pre-assembled.)
3. Place pre-assembled Box Girder BB 30 and Cross Girder 12 on Pier 4. (Note: The upper half of BB 30 is not pre-assembled.)
4. Place the upper half of Box Girder BA 30 and BB 30 and make pinned connection at Bridge EB2.
5. Place Diaphragm BD5.
6. Place Center Deck SDB 30 and Side Decks SDA 30 and SDC 30.

Stage 2N Field Splice 30 to Pier 1N:

1. Place bearings at Pier 1N and temporary fix. (See FW drawings for details.)
2. Place pre-assembled Box Girder BA31-BA33 from Field Splice 30 to Pier 1N.
3. Place pre-assembled Box Girder BB31-BB33 from Field Splice 30 to Pier 1N.
4. Place Diaphragms ID47 to ID51 and BD6.
5. Place Center Decks SDB31 to SDB33 and Side Decks SDA31-SDA33 and SDC31-SDC33.
6. Remove blocking at Pier 4.

Stage 3N Field Splice 28 to Field Splice 29:

1. Place Box Girder BA 29 by cantilevering from FS 29. (See General Note 5.)
2. Place Box Girder BB 29 by cantilevering from FS 29. (See General Note 5.)
3. Place Diaphragm ID 44, ID 45 and ID 46.
4. Place Center Deck SDB 29 and Side Decks SDA 29 and SDC 29.

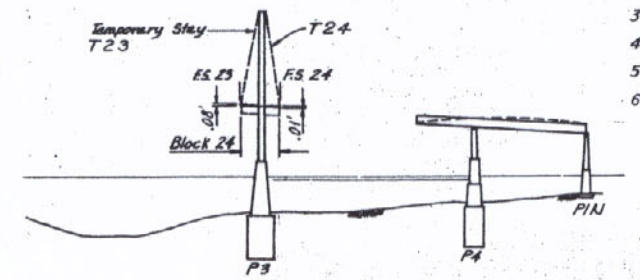

STAGE 4N

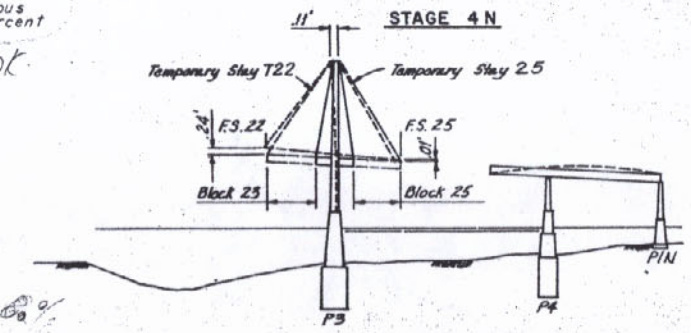

STAGE 5N

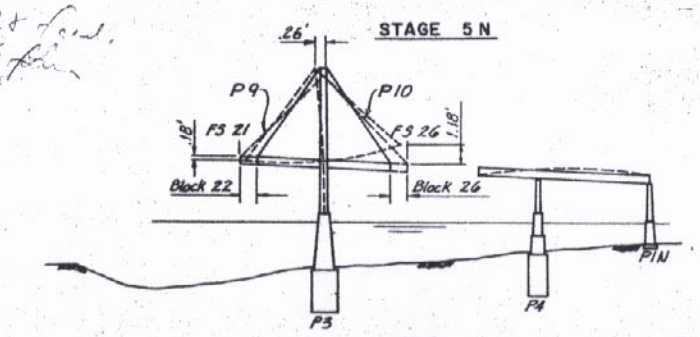

STAGE 6N

Stage 4N Field Splice 23 to Field Splice 24:

1. Place pot bearings and temporary fix at Pier 3. See FW drawings for details.
2. Place Box Girder BA 24 and connect Stays T23 and T24.
3. Place Box Girder BB 24 and connect Stays T23 and T24.
4. Place Diaphragm BD5.
5. Place Center Deck SDB 24 and Side Decks SDA 24 and SDC 24.
6. Jack Stays T23 and T24. (See General Note 4.)

Stage 5N Field Splice 24 to Field Splice 25
Field Splice 22 to Field Splice 23:

1. Block 23 and 25 will be erected by supporting the box girders at FS23 and FS24 on "quick connects". (See Sheets EP17 thru EP21) and at FS22 and FS25 by Stays T22 and T25. (See General Note 4.)
2. The Box Girder erection sequence will be as follows:
   a. Place Box Girder BA25 by connecting "quick connect" at FS24 and T25.
   b. Place Box Girder BA 23 by connecting "quick connect" at FS23 and T22.
   c. Place Box Girder BB25 by connecting "quick connect" at FS24 and T25.
   d. Place Box Girder BB23 by connecting "quick connect" at FS23 and T22.
3. Place Diaphragms ID 35 to ID 37 and ID 38 to ID 40.
4. Place Center Decks SDB 23 and SDB 25.
5. Place Side Decks SDA 23, SDC 23, SDA 25 and SDC 25.

Stage 6N Field Splice 25 to Field Splice 26
Field Splice 21 to Field Splice 22:

1. Cantilever pre-assembled Box Girder BA26 and Cross Girder 10 from FS25. (See General Note 5.)
2. Cantilever pre-assembled Box Girder BA22 and Cross Girder 9 from FS22. (See General Note 5.)
3. Cantilever pre-assembled Box Girder BB26 and Cross Girder 10 from FS25. (See General Note 5.)
4. Cantilever pre-assembled Box Girder BB22 and Cross Girder 9 from FS22. (See General Note 5.)
5. Place Center Decks SDB22 and SDB26.
6. Place Side Decks SDA22, SDC22, SDA26 and SDC26.
7. Place the outside top P9 strand at each end of Cross Girder 9 and the top P10 strand at each end of Cross Girder 10, then place the outside bottom strand at each end of Cross Girder 9. (See General Note 3.)
8. Jack stays at Cross Girders 9 and 10 to seat P9 and P10 sockets on 4-inch shim packs.
9. Place the inside top P9 strand at each end of Cross Girder 9 and the bottom P10 strands at each end of Cross Girder 10, then place the inside bottom strand at each end of Cross Girder 9. Jack to seat the strands on 4" shim packs (see General Note 3).
10. Remove stays T22 through T25.

Note:

Girder deflected positions are with respect to the design profile as dated 2-27-78. Tower deflections are the horizontal displacements from vertical of work point 8 or 18, which is located 9 inches below the bottom flange of the upper strut. Deflections shown are magnified approximately 50 times.

APPROVED
LOUIS A. GARRIDO
BRIDGE DESIGN ENGINEER
By RFB Date SEP 14 1980

RECEIVED OCT 7 1980

REVIEWED BY
RICHARD A. MEHARD
CONSULTING ENGINEERS
DATE 10-10-80
BY E.S.

STATE OF LOUISIANA
DANIEL J. WATKINS
REG. NO. 13134
REGISTERED PROFESSIONAL ENGINEER IN CIVIL ENGINEERING

Date	Description	by
9-26-80	Notes	
6-20-80	Structure Deflected Positions	ELK
12-15-78	Notes & Stay No.	MDM

Revisions

HNTB
HOWARD NEEDLES TAMMEN & BERGENDOFF

ERECTOR
THE MELBOURNE BROTHERS CONSTRUCTION CO.
P.O. Box 2251 North Canton, Ohio 44720 216-494-1833

Owner - State of Louisiana
General Contractor - Williams Brothers Construction Co., Inc.
Fabricator - Ishikawajima - Harima Heavy Industries Co., Ltd.

GIRDER ERECTION PROCEDURE STAGE 1N - STAGE 7N

MISSISSIPPI RIVER BRIDGE (LULING)
MAINRIVER CROSSING SUPERSTRUCTURE
St Charles Parish State Project No. 450-37-02

Date 5-17-78	Scale 1" = 20'-0"	Sheet No. EP 12
Made By JRE	Chkd by MDM	Apprvd by

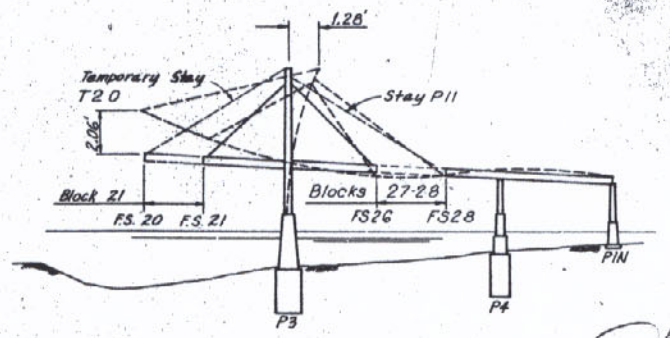

STAGE 7N

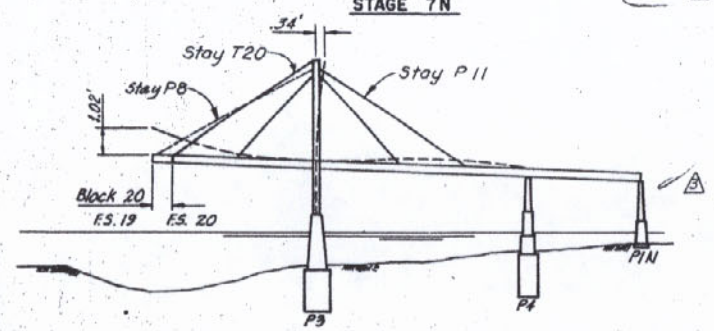

STAGE 8N

Stage 7N Field Splice 26 to Field Splice 28:
Field Splice 20 to Field Splice 21:

1. Place pre-assembled Block BA27, BA28 and Cross Girder 11 using strong back at FS26 and sliding pin connection at FS28 (see Sheet EP20).
2. Cantilever Block BA21 from FS21. (See General Note 5.)
3. Place pre-assembled Block BB 27, BB 28 and Cross Girder 11 using strong back at FS26 and sliding pin connection at FS28 (see Sheet EP20).
4. Cantilever Block BB 21 from FS 21. (See General Note 5.)
5. Place Diaphragms ID 41, ID 42, ID 43, ID 32, ID 33 and ID 34.
6. Connect Temporary Stay T20 to each of the four "quick connects" at FS20 and to the anchorage at the top of the tower.
7. Place the top P11 strand at each end of Cross Girder 11 and jack to seat the strand sockets on 4-inch shim packs.
8. Place Center Deck SDB 21 and Side Decks SDA 21 and SDC 21.

   Note: During the jacking of Stay P11, Field Splice 28 will come into alignment and the splice is made. Jack horizontally at Pier 1N and lift vertically at FS 28 with floating equipment, if necessary, to make FS 28. Release temporary fixing at Pier 1N bearings.
9. Jack Temporary Stay T20 (see General Note 5).
10. Place the bottom P11 strand at each end of Cross Girder 11 and jack to seat the pull rod nuts (see General Note 3).

Stage 8N Field Splice 19 to Field Splice 20:

1. Cantilever pre-assembled Box Girder BA 20 and Cross Girder 8 from FS 20. (See General Note 5.)
2. Cantilever pre-assembled Box Girder BB 20 and Cross Girder 8 from FS 20. (See General Note 5.)
3. Place Diaphragm ID 31.
4. Place Center Deck SDB 20 and Side Decks SDA 20 and SDC 20.
5. Place Center Decks SDB 27 and SDB 28. Place Side Decks SDA 27, SDA 28, SDC 27 and SDC 28.
6. Jack the bottom strand at each end of Cross Girder 11 to seat the two-strand sockets on 4-inch shim packs.
7. Place the top outside strands and then the bottom outside strands at Cross Girder 8 and jack to seat the strand sockets on 4-inch shim packs.
8. Place the top inside strands and then the bottom inside strands at Cross Girder 8 and jack to seat the strand sockets on 4-inch shim packs.
9. Remove Stay T20.

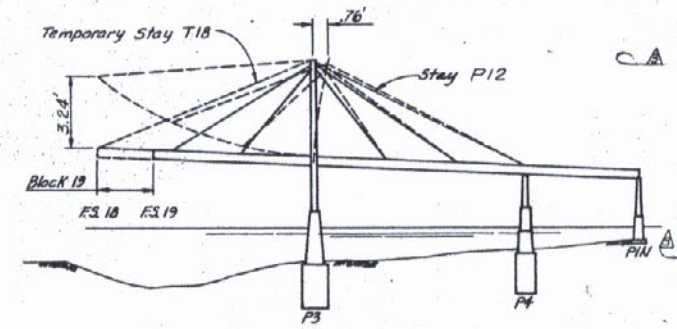

STAGE 9N

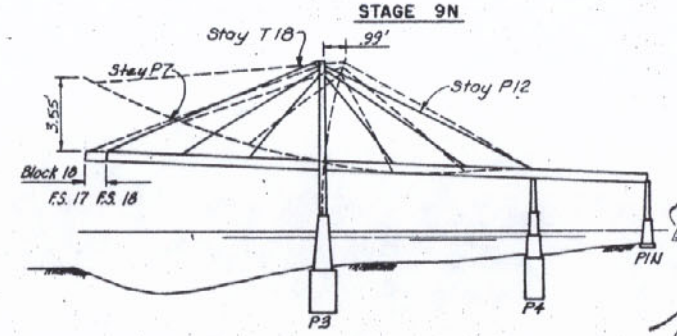

STAGE 10N

Stage 9N Field Splice 18 to Field Splice 19:

1. Place the top outside strand at each end of Cross Girder 12 and jack to seat the pull rod nuts.
2. Cantilever Box Girder BA 19 from FS 19. (See General Note 5.)
3. Cantilever Box Girder BB 19 from FS 19. (See General Note 5.)
4. Place Diaphragms ID 29 and ID 30.
5. Connect Temporary Stay T18 to each of the four "quick connects" at FS 18 and to the anchorage at the top of tower.
6. Jack to seat the two outside top strands without shim packs. Place the bottom outside strand at each end of Cross Girder 12 and jack to seat the strands without shim packs.
7. Place Center Deck SDB 19 and Side Decks SDA 19 and SDC 19.
8. Jack Temporary Stay T18 (see General Note 5).

Stage 10N Field Splice 17 to Field Splice 18:

1. Cantilever pre-assembled Box Girder BA 18 and Cross Girder 7 from FS 18. (See General Note 5.)
2. Cantilever pre-assembled Box Girder BB 18 and Cross Girder 7 from FS 18. (See General Note 5.)
3. Place Diaphragm ID 28.
4. Place Center Deck SDB 18 and Side Decks SDA 18 and SDC 18.
5. Place the top strand at each end of Cross Girder 7 and the top inside strand at each end of Cross Girder 12 and jack to seat the strands on 6-inch shim packs
6. Place the bottom P7 strands and the bottom inside P12 strands and jack to seat the strands on 6-inch shim packs.
7. Jack the outside strands at P12 to approximately 995 kip load per strand.

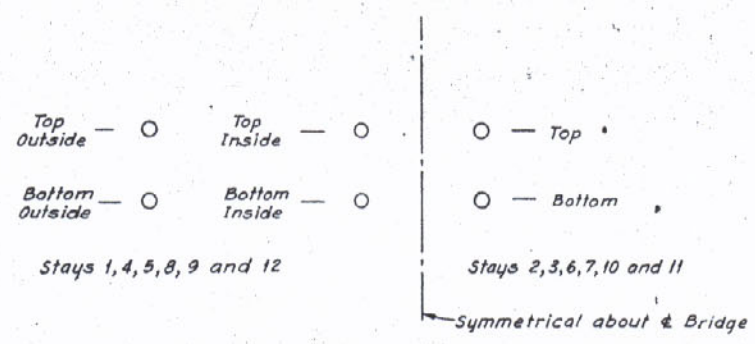

STRAND DESIGNATION

CHECKED BY
WILLIAMS & HEPPARD
DATE 10-10-80
BY E.S.

RECEIVED
OCT 7 1980

Note:
Girder deflected positions are with respect to the design profile as dated 2-27-78. Tower deflections are the horizontal displacements from vertical of work point 8 or 18, which is located 9 inches below the bottom flange of the upper strut. Deflections shown are magnified approximately 50 times.

APPROVED
LOUIS A. GARRIDO
DIRECTOR DESIGN ENGINEER
By REB Date SEP 1 4 1980

STATE OF LOUISIANA
DANIEL J. WATKINS
REG. NO. 13134
REGISTERED PROFESSIONAL ENGINEER IN CIVIL ENGINEERING

Date	Description	by
9-26-80	Notes	
8-20-80	Structure Deflected Positions	ELK
12-15-78	Stay Numbers & Notes	MDM

Revisions

ERECTOR
THE MELBOURNE BROTHERS CONSTRUCTION CO.
P.O. Box 2251 North Canton, Ohio 44720 216-494-1833

Owner - State of Louisiana
General Contractor - Williams Brothers Construction Co., Inc.
Fabricator - Ishikawajima - Harima Heavy Industries Co., Ltd.

GIRDER ERECTION PROCEDURE
STAGE 8N - STAGE 11N

MISSISSIPPI RIVER BRIDGE (LULING)
MAINRIVER CROSSING SUPERSTRUCTURE
St. Charles Parish State Project No. 450-37-02

Date 5-17-78	Scale 1" = 20'-0"	Sheet No. EP 13
Made By JRE	Chkd by MDM	Apprvd by

HNTB
HOWARD NEEDLES TAMMEN & BERGENDOFF

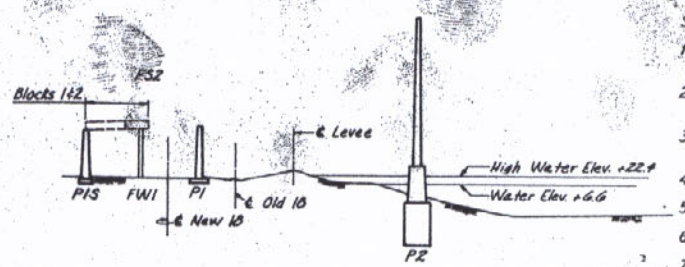

STAGE 1S

Stage 1S Pier 1S to Field Splice 2:

1. Route traffic over old Louisiana Route 18 and close new Louisiana Route 18 to traffic.
2. Erect a falsework bent at Diaphragm ID3. (See FW drawings for details.)
3. Temporarily fix Bearing EB1 at Pier 1S. (See FW drawings for details.)
4. Place pre-assembled Box Girder BA1-BA2 on Pier 1S and FW1
5. Place pre-assembled Box Girder BB1-BB2 on Pier 1S and FW1.
6. Place Diaphragms BD1, ID1, ID2 and ID3.
7. Place Center Decks SDB1 and SDB2 and Side Decks SDA1, SDA2, SDC1 and SDC2.

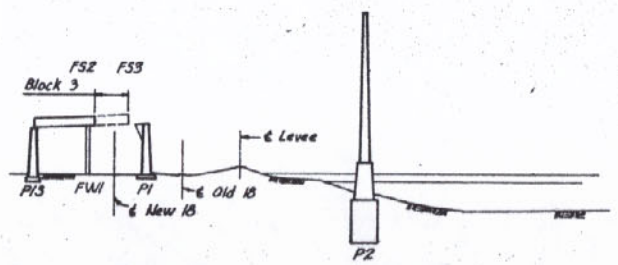

STAGE 2S

Stage 2S Field Splice 2 to Field Splice 3:

1. Cantilever Box Girder BA3 from FS 2.
2. Cantilever Box Girder BB3 from FS 2.
3. Place Diaphragms ID4 and ID5.
4. Place Center Deck SDB3 and Side Deck SDA3 and SDC3.

NOTE: Alternate procedure is to place Box Girders BA3 and BA4 then place BB3 and BB4.

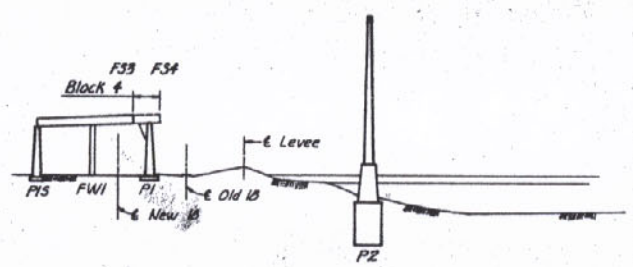

STAGE 3S

Stage 3S Field Splice 3 to Field Splice 4:

1. Place support bracket on Pier 1 and temporary blocking at Pier 1 Bearing EB2. (See FW drawings for details.)
2. Place the lower portion of Box Girder BA4 on Pier 1 bracket and blocking.
3. Place one-half of Cross Girder 1.
4. Place the upper half of Box Girder BA4.
5. Place the lower portion of Box Girder BB4 on Pier 1 bracket and blocking.
6. Place second half of Cross Girder 1.
7. Place upper portion of Box Girder BB4.
8. Place Diaphragm BD2.
9. Jack as necessary at FW1 and Pier bracket to make Splice FS 3.
10. Place Center Deck SDB4 and Side Decks SDA4 and SDC4.
11. Remove falsework Bent 1.

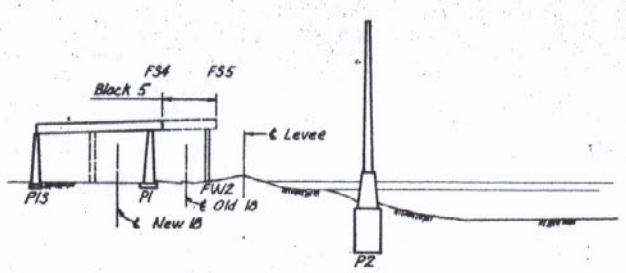

STAGE 4S

Stage 4S Field Splice 4 to Field Splice 5:

1. Reroute traffic to New Louisiana Route 18.
2. Close old Louisiana Route 18 to traffic.
3. Erect falsework Bent 2 at intermediate Diaphragm ID8. (See FW drawings for details.)
4. Lift Box Girder BA5 into position, make splice at FS4 and set the girder on FW2.
5. Lift Box Girder BB5 into position, make splice at FS4 and set the girder on FW2.
6. Place Diaphragms ID6, ID7 and ID8.
7. Place Center Deck SDB5 and Side Decks SDA5 and SDC5.

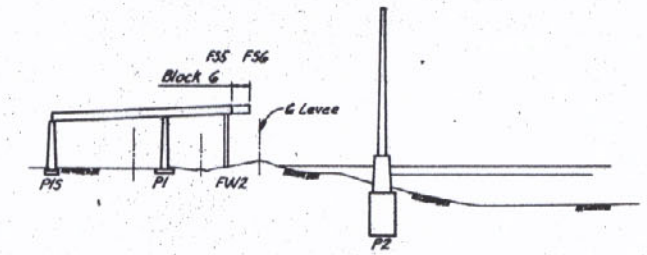

STAGE 5S

Stage 5S Field Splice 5 to Field Splice 6:

1. Cantilever pre-assembled Box Girder BA6 and Cross Girder 2 from FS5.
2. Cantilever pre-assembled Box Girder BB6 and Cross Girder 2 from FS5.
3. Place Center Deck SDB5 and Side Decks SDA5 and SDC5.

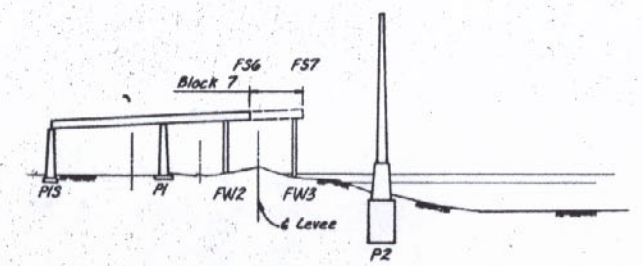

STAGE 6S

Stage 6S Field Splice 6 to Field Splice 7:

1. Erect Falsework Bent 3 at Intermediate Diaphragm ID11. (See FW drawings for details.)
2. Lift Box Girder BA7 into position, make splice at FS6 and set the girder on FW3.
3. Lift Box Girder BB7 into position, make splice at FS6 and set the girder on FW3.
4. Place Diaphragms ID9, ID10 and ID11.
5. Place Center Deck SDB7 and Side Decks SDA7 and SDC7.
6. Lower Falsework Bent 2 about 4.5 inches.

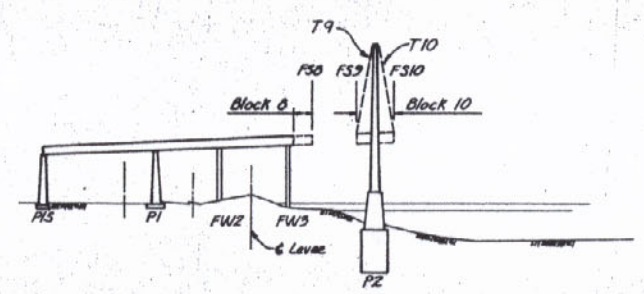

STAGE 7S

*Stage 7S Field Splice 7 to Field Splice 8 and Field Splice 9 to Field Splice 10:

1. Cantilever pre-assembled Box Girder BA8 and Cross Girder 3 from FS7.
2. Cantilever pre-assembled Box Girder BB8 and Cross Girder 3 from FS7.
3. Place Center Deck SDB 8 and Side Decks SDA 8 and SDC 8.
4. Erect Block 10 from the water using the barge-mounted 4500 platform ringer crane as follows:
   a. Place Box Girder BA10 and connect Stays T9 and T10. (See General Note 4.)
   b. Place Box Girder BB10 and connect Stays T9 and T10. (See General Note 4.)
   c. Place Diaphragm BD3.
   d. Place Center Deck SDB 10.
   e. Place Side Decks SDA 10 and SDC 10.
   f. Jack Stays T9 and T10 (see General Note 4).

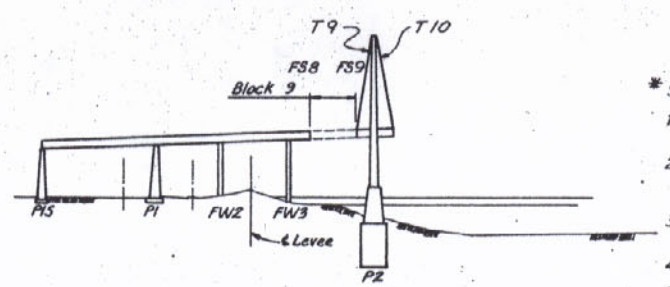

STAGE 8S

*Stage 8S Field Splice 8 to Field Splice 9:

1. Both rigs may be used for erection of Block 9. (See drawing No. 8 for crawler derrick and anchor layout.)
2. Lift Box Girder BA9 into position and make Field Splice 9. Support the south end at Field Splice 8 using a strong back. (See Sheet EP20.)
3. Lift Box Girder BA9 into position and make Field Splice 9. Support the south end at Field Splice 8 using a strong back.
4. Place Diaphragms ID 12, ID 13 and ID 14.
5. Jack horizontally at Pier 1S and vertically at Falsework Bents to make Field Splice FS9.
6. Release temporary fixing at Bearing EB1, Pier 1S.
7. Place Center Deck SDB9 and Side Decks SDA9 and SDC9.

RECEIVED OCT 7 1980

*Note:

Erection scheme shown is an alternate method. Stage 7S and 8S are to be erected without the use of temporary stays.

NOTE:

For Crawler Derrick and anchor layout see land erection Spans 1 and 2 drawings.

PREPARED BY
FRANKLIN & MIDYETTE
CONSULTING ENGINEERS
DATE 10-10-80
BY E.S.

STATE OF LOUISIANA
DANIEL J. WATKINS
REG. NO. 13134
REGISTERED PROFESSIONAL ENGINEER IN CIVIL ENGINEERING

APPROVED
LOUIS A. GARRIDO
BRIDGE DESIGN ENGINEER
By REB Date SEP 14 1980

Date	Description	by
8-20-80	Note	
12-5-78	General Notes & Stay No	MDM

Revisions

ERECTOR
THE MELBOURNE BROTHERS CONSTRUCTION CO.
P.O. Box 2251 North Canton, Ohio 44720 216-494-1833

Owner - State of Louisiana
General Contractor - Williams Brothers Construction Co., Inc.
Fabricator - Ishikawajima - Harima Heavy Industries Co., Ltd.

GIRDER ERECTION PROCEDURE STAGE 1S - STAGE 8S

MISSISSIPPI RIVER BRIDGE (LULING)
MAINRIVER CROSSING SUPERSTRUCTURE
St. Charles Parish State Project No. 450-37-02

Date 5-17-78	Scale 1" = 20'-0"	Sheet No. EP 14
Made By JRE	Chkd by MDM	Apprvd by

HNTB
HOWARD NEEDLES TAMMEN & BERGENDOFF

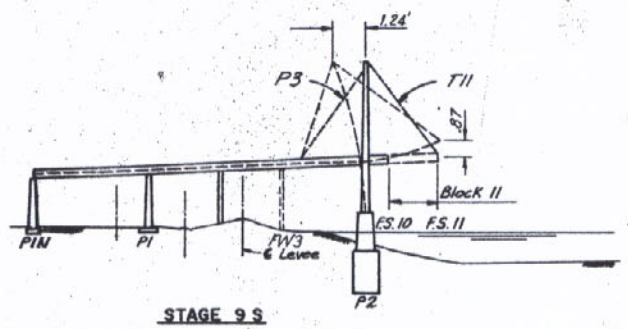

STAGE 9 S

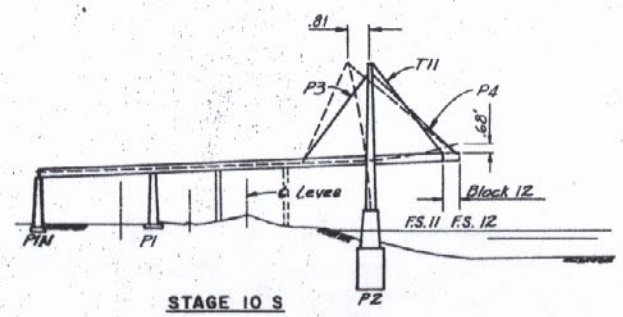

STAGE 10 S

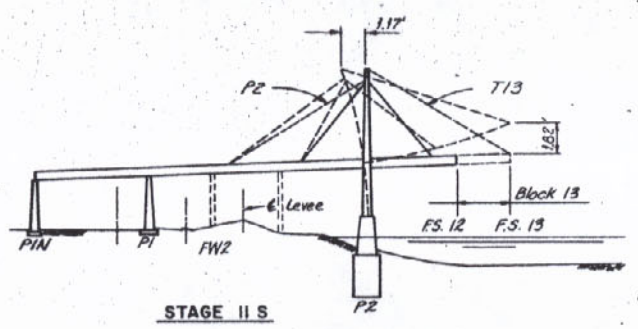

STAGE 11 S

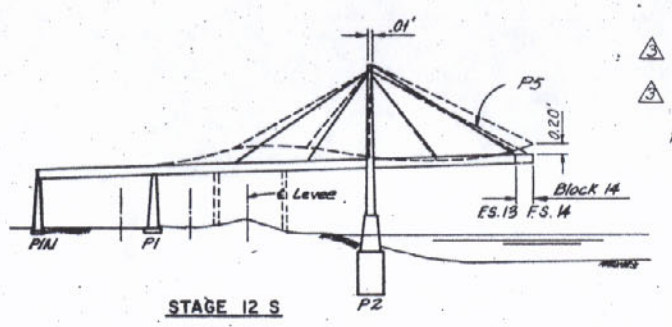

STAGE 12 S

Stage 9S Field Splice 10 to Field Splice 11:

1. Cantilever Box Girder BA11 from Field Splice 10 (see General Note 5).
2. Cantilever Box Girder BB11 from Field Splice 10, (see General Note 5).
3. Place Diaphragms ID 15, ID 16 and ID 17.
4. Place Center Deck SDB 11.
5. Place Side Decks SDA 11 and SDC 11.
6. △3 Place the top strand at each end of Cross Girder 3.
7. Connect Temporary Stay T11 strands to each of the four "quick connects" at FS11. (See General Note 4.)
8. Jack to seat the top strands at Cross Girder 3 on 4-inch shim packs. Place the bottom strand at each end of Cross Girder 3 and jack to seat the strands on 4-inch shim packs.
9. Jack Temporary Stays T11. (See General Note 4.)

Stage 10S Field Splice 11 to Field Splice 12:

1. Cantilever pre-assembled Box Girder BA12 and Cross Girder 4 from Field Splice 11. (See General Note 5.)
2. Cantilever pre-assembled Box Girder BB12 and Cross Girder 4 from Field Splice 11. (See General Note 5.)
3. Place Center Deck SDB 12 and Side Decks SDA 12 and SDC 12.
4. △3 Place the top outside strands at each end of Cross Girder 4 and jack to seat the strands on 4-inch shim packs.
5. △3 Place the bottom outside strands at each end of Cross Girder 4 and jack to seat the strands on 4-inch shim packs.
6. △3 Place the top inside strands at each end of Cross Girder 4 and jack to seat the strands on 4-inch shim packs. Place the bottom inside strands at each end of Cross Girder 4 and jack to seat the strands on 4-inch shim
7. Remove Temporary Stay T11.

Stage 11S Field Splice 12 to Field Splice 13:

1. Cantilever Box Girder BA 13 from Field Splice 12. (See General Note 5.)
2. Cantilever Box Girder BB 13 from Field Splice 12. (See General Note 5.)
3. Falsework Bent 3 will become free during the cantilevering and is to be released.
4. Place Diaphragms ID 18, ID 19 and ID 20.
5. Place Center Deck SDB 13 and Side Decks SDA 13 and SDC 13.
6. △3 Place the top strand at each end of Cross Girder 2 and take up cable slack to seat the pull rod nuts (see General Note 3).
7. Connect Temporary T13 strands to each of the four "quick connects" at FS13 and to the anchorage at the top of tower. (See General Note 4.)
8. △3 Jack at Cross Girder 2 to seat the two top strand sockets on 4-inch shim packs.
9. △3 Place the bottom strand at each end of Cross Girder 2 and jack to seat the strand sockets on 4-inch shim packs.
10. Jack Stays T13 (see General Note 4.).

Stage 12S Field Splice 13 to Field Splice 14:

1. Cantilever pre-assembled Box Girder BA 14 and Cross Girder 5 from Field Splice 13. (See General Note 5.)
2. Cantilever pre-assembled Box Girder BB 14 and Cross Girder 5 from Field Splice 13. (See General Note 5.)
3. Place ID 21.
4. Place Center Deck SDB 14 and Side Decks SDA 14 and SDC 14.
5. Falsework Bent 2 will become free and is to be released from the erection procedure.
6. △3 Place the top outside strand of each end of Cross Girder 5 and jack to seat the strand sockets on 4-inch shim packs. Place the bottom outside strand of each end of Cross Girders and jack to seat the strand sockets on 4-inch shim packs.
7. △3 Place the top inside strand at each end of Cross Girder 5 and jack to seat the strand socket on 4-inch shim packs. Place the bottom inside strand of each end of Cross Girder 5 and jack to seat the strand sockets on 4-inch shim packs.
8. △3 Remove Temporary Stay T13.

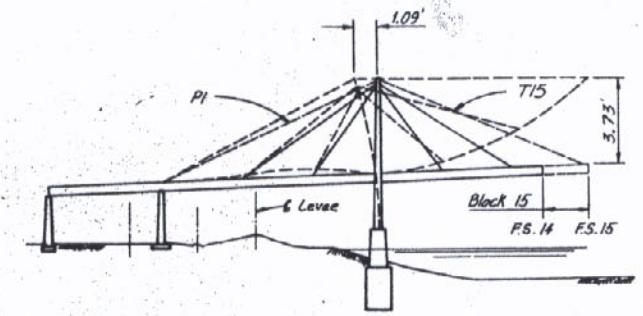

STAGE 13 S

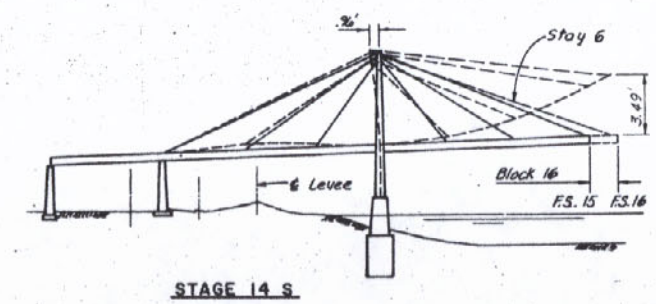

STAGE 14 S

Stage 13S Field Splice 14 to Field Splice 15:

1. △3 Place the top outside strands of each end of Cross Girder 1 and jack to seat the pull rod nuts.
2. Cantilever Box Girder BA15 from FS14. (See General Note 5.)
3. Cantilever Box Girder BB15 from FS14. (See General Note 5.)
4. Place Diaphragms ID22 and ID23.
5. Place Center Deck SDB 15 and Side Decks SDA 15 and SDC 15.
6. △3 Jack at Cross Girder 1 to seat the top outside strands without shim packs. Place the bottom outside strands at each end of Cross Girder 1 and jack to seat the strand sockets without shims.
7. △3 Place the top inside strand of each end of Cross Girder 1 and connect Temporary Stay T15 to each of the four "quick connects" at FS15 (see General Note 5).
8. △3 Jack at Cross Girder 1 to seat the top inside strands without shim packs. Place the bottom inside strand at each end of Cross Girder 1 and jack to seat the strand sockets without shim packs.
9. Jack Stays T15 (see General Note 4).

Stage 14S Field Splice 15 to Field Splice 16:

1. Cantilever pre-assembled Box Girder BA16 and Cross Girder 6 from FS15. (See General Note 5.)
2. Cantilever pre-assembled Box Girder BB16 and Cross Girder 6 from FS15. (See General Note 5.)
3. Place Diaphragm ID24.
4. Place Center Deck SDB 16 and Side Decks SDA 16 and SDC 16.
5. △3 Place the top strand at each end of Cross Girder 6 and jack to seat the strand sockets on 6-inch shim packs.
6. △3 Place the bottom strand at each end of Cross Girder 6 and jack to seat the strand sockets on 6-inch shim packs.
7. △3 Jack at Cross Girder 1 to seat the outside strands on 6-inch shim packs.
8. △3 Jack at Cross Girder 1 to seat the inside strand on 8-inch shim packs.

REVIEWED BY
HOWARD & NEWMAN
CONSULTING ENGINEERS
DATE 10-10-80
BY E.S.

RECEIVED OCT 7 1980

Note:

Girder deflected positions are with respect to the design profile as dated 2-27-78. Tower deflections are the horizontal displacements from vertical of work point 8 or 18, which is located 9 inches below the bottom flange of the upper strut. Deflections shown are magnified approximately 50 times.

APPROVED
LOUIS A. GARRIDO
BRIDGE DESIGN ENGINEER
By RFB Date SEP 1 4 1980

STATE OF LOUISIANA
DANIEL A. WATKINS
REG. NO. 13134
REGISTERED PROFESSIONAL ENGINEER IN CIVIL ENGINEERING

HNTB
HOWARD NEEDLES TAMMEN & BERGENDOFF

Date	Description	by
9-26-80	Notes	
8-20-80	Structure Deflected Positions	ELK
12-4-78	General Notes & Stay Numbers	PCO

Revisions

△4

ERECTOR
THE MELBOURNE BROTHERS CONSTRUCTION CO.
P.O. Box 2251 North Canton, Ohio 44720 216-494-1833

Owner - State of Louisiana
General Contractor - Williams Brothers Construction Co., Inc
Fabricator - Ishikawajima - Harima Heavy Industries Co., Ltd.

GIRDER ERECTION PROCEDURE
STAGE 9S - STAGE 14S

MISSISSIPPI RIVER BRIDGE (LULING)
MAINRIVER CROSSING SUPERSTRUCTURE
St. Charles Parish State Project No. 450-37-02

Date 5-17-78	Scale 1"=20'-0"	Sheet No. EP 15
Made By JRE	Chkd by MDM	Apprvd by

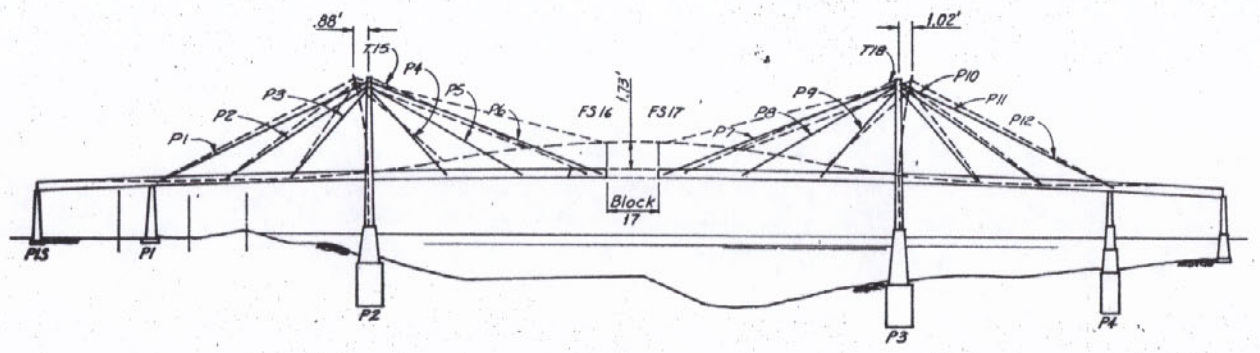

CLOSURE STAGE

CLOSURE STAGE -- Field Splice 16 to Field Splice 17:

1. Jack horizontally to open or close FS 16-FS 17 as required.
2. Place Box Girder BA 17.
3. Place Box Girder BB 17.
4. Make transverse field splices FS 16 and FS 17 and release fixing of Pier 3 expansion bearings. Adjust P12 as required.
5. Place Diaphragms ID 25, ID 26 and ID 27.
6. Place Center Deck SDB 17 and Side Decks SDA 17 and SDC 17.
7. Remove Temporary Stays T15 and T18.
8. Jack at Cross Girders 1 and 12 to seat all strands on 6" shim packs. (see Sheet ep23 for nominal shim packs.

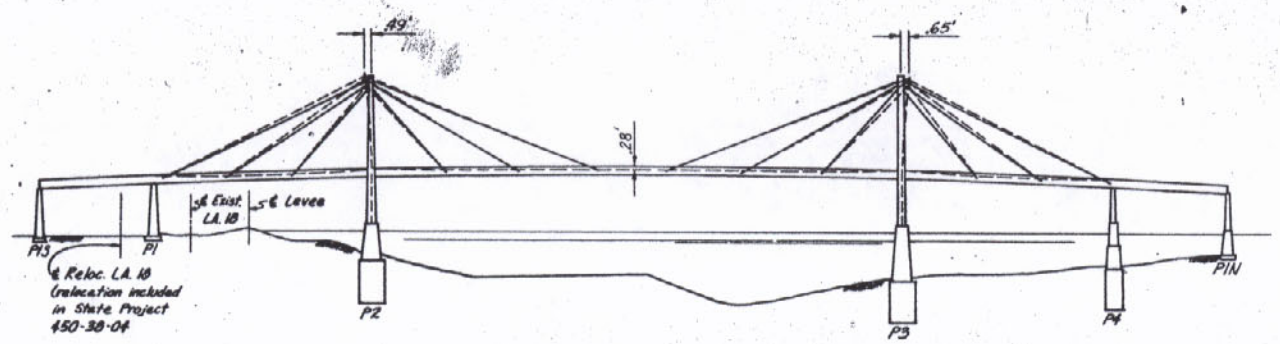

FINAL STAGE

FINAL STAGE:

1. Place Main Span Barrier Curbs, Median Curb and Fairing Pieces.
2. Survey deck profile and make final cable adjustments, if required.
3. Place epoxy asphalt wearing surface.
4. Grout cable stays.
5. Place metal handrail.

REVIEWED BY
EDWARD & LIEBWARD
CONSULTING ENGINEERS
DATE 10-10-80
BY E.S.

RECEIVED
OCT 7 1980

Note:

Girder deflected positions are with respect to the design profile as dated 2-27-78. Tower deflections are the horizontal displacements from vertical of work point 8 or 18, which is located 9 inches below the bottom flange of the upper strut. Deflections shown are magnified approximately 50 times.

APPROVED
LOUIS A. GARRIDO
DESIGN ENGINEER
By REB Date SEP 14 1980

STATE OF LOUISIANA
DANIEL A. WATKINS
REG. NO. 13134
REGISTERED PROFESSIONAL ENGINEER IN CIVIL ENGINEERING

HNTB
HOWARD NEEDLES TAMMEN & BERGENDOFF

Date	Description	by
9-20-80	Structure Deflected Positions	GLK
12-4-78	General Notes & Stay Numbers	MDM

Revisions

ERECTOR
THE MELBOURNE BROTHERS CONSTRUCTION CO.
P.O. Box 2251 North Canton, Ohio 44720 216-494-1833

Owner - State of Louisiana
General Contractor - Williams Brothers Construction Co., Inc.
Fabricator - Ishikawajima - Harima Heavy Industries Co., Ltd.

GIRDER ERECTION PROCEDURE
FINAL STAGES

MISSISSIPPI RIVER BRIDGE (LULING)
MAINRIVER CROSSING SUPERSTRUCTURE
St. Charles Parish State Project No. 450-37-02

Date 5-17-78	Scale 1"=20'-0"	Sheet No. EP 16
Made By JRE	Chkd by MDM	Apprvd by

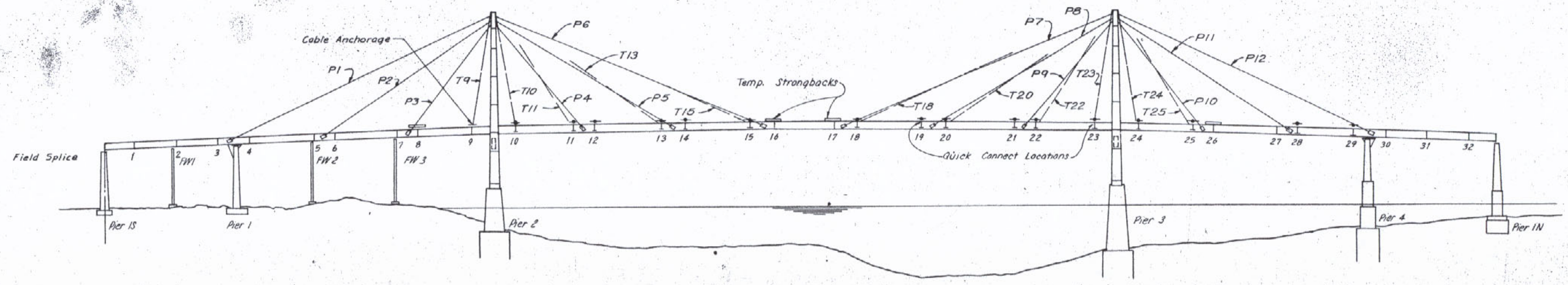

ELEVATION

GENERAL NOTES:

To allow for the rapid release of the cranes from the field splicing operation, "Quick Connects" will be used to support the box girder during cantilever construction and "Strong Backs" will be used to support the box girder at closures. The proposed locations of these "Quick Connects" and "Strong Backs" are shown in the above elevation. These temporary connections are designed to support the box girder prior to making the field splices and will serve the purpose of lessening the time during which the barge-mounted crane is anchored in the area of navigation. The "Quick Connects" will also remove the problem of overloading the crane during the splicing operation by wakes from passing ships lifting the barge-mounted crane while it is supporting the box girder.

Details shall conform to the "Standard Specifications for Highway Bridges", 12th Edition, 1977 and pertinent interim specifications as adopted by AASHTO. These Specifications will be supplemented by the "Guide To Stability Design Criteria for Metal Structures", 3rd Edition.

All permanent structural metalwork shall be high-strength low-alloy ASTM-A588 weathering steel.

Temporary fasteners shall be 1" diameter ASTM A325 bolts. After removing the temporary fixing, all holes in the deck plate shall be filled with high-strength bolts with a hardened oversized washer ② on the top deck surface. Bolts, washers and nuts shall have atmospheric corrosion resistance and weathering characteristics compatible with the deck plate. The temporary fastener holes must be filled with the above bolts prior to sandblasting the deck.

QUICK CONNECT CONSTRUCTION SEQUENCE

1. Position Block BA for contilevering from the field splice, with a double pin plate bolted over each web on the anchor span side of the field splice and a single pin plate bolted over each web on the contilever span side of the field splice.
2. Align Block BA with the single pin plates inside the double pin plates and place the two 6-inch round pins.
3. Place the top plates of the bottom flange splice in position.
4. Lower Block BA to allow bearing between the outside bottom flange stiffener plates.
5. Bolt the vertical legs of the splice angle to the sides of the outside flange stiffener plates.
6. Release the rig from Block BA.
7. Complete the bottom flange splice including the bolts in the horizontal legs of the flange splice angle
8. Make the web and top flange splice.
9. Release the quick connects by removing the bolts for the single pin plate. At field splices 10, 11, 13, 15, 18, 20, 22, 23, 24 and 25 the double pin plate will remain bolted to the deck plate to serve as the anchorage for the temporary cable stays. At field splices 12, 14, 19 and 21 remove the bolts securing the double pin plates to the deck.
10. Complete deck splice in area of quick connects.
11. Position Block BB and follow steps 2 through 10. The field splice for Block BA need not be 100% bolted before erecting Block BB.
12. After removal of the pin plates fill all erection bolt holes with 1-inch diameter high-strength bolts (see the General Notes).
13. Quick connections shall be included in the shop assembly fit-up operation. Milled end of compression members shall be in full bearing and the pin connecting the two parts of the quick connect shall be in place before reaming the sub-size anchor bolt holes to specified size.

STRONG BACK CONSTRUCTION SEQUENCE

1. The strong backs are provided to support the box girder at closure of Spans 3, 4 and 5.
2. The strong back is bolted to the closure piece (see sheet EP20) of the webs. The closure piece is placed in position with the strong back resting on the adjacent erected cantilever.
3. The crane is released from the box girder and sufficient jacking is provided to make the field splice.
4. After completion of the bottom flange web and accessible deck splices the strong backs are released by removing the bolts connecting the strong back to the deck plate. The deck splice is then completed.
5. Fill all erection bolt holes with 1-inch diameter high strength bolts (see the General Notes).

RECEIVED BY
DIVERSIFIED BY
OVERLAND & LIEBHARD
CONSULTING ENGINEERS
DATE 10-10-80
BY E.S.

RECEIVED
OCT 7 1980

STATE OF LOUISIANA
DANIEL A. WATKINS
REG. NO. 13134
REGISTERED PROFESSIONAL ENGINEER IN CIVIL ENGINEERING

APPROVED
LOUIS A. GARRIDO
BRIDGE DESIGN ENGINEER
By REB Date SEP 1 4 1980

Date	Description	by
8-1-79	Washer for fill bolts	
10-26-78	Note 13 & Stay Numbers	

Revisions

HNTB
HOWARD NEEDLES TAMMEN & BERGENDOFF

ERECTOR
THE MELBOURNE BROTHERS CONSTRUCTION CO.
P.O. Box 2251 North Canton, Ohio 44720 216-494-1833

Owner - State of Louisiana
General Contractor - Williams Brothers Construction Co., Inc.
Fabricator - Ishikawajima - Harima Heavy Industries Co., Ltd.

TEMPORARY FIELD SPLICES

MISSISSIPPI RIVER BRIDGE (LULING)
MAINRIVER CROSSING SUPERSTRUCTURE
St. Charles Parish State Project No. 450-37-02

Date 9-14-78	Scale	Sheet No. EP-17
Made By DLB	Chkd by MDM	Apprvd by

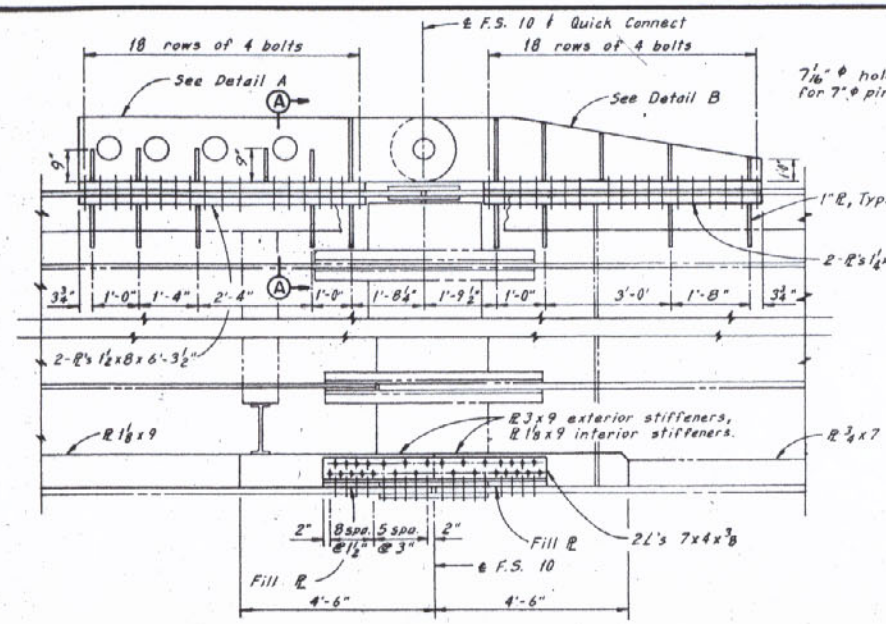

WEB ELEVATION F.S. 10
(F.S. 23 similar)

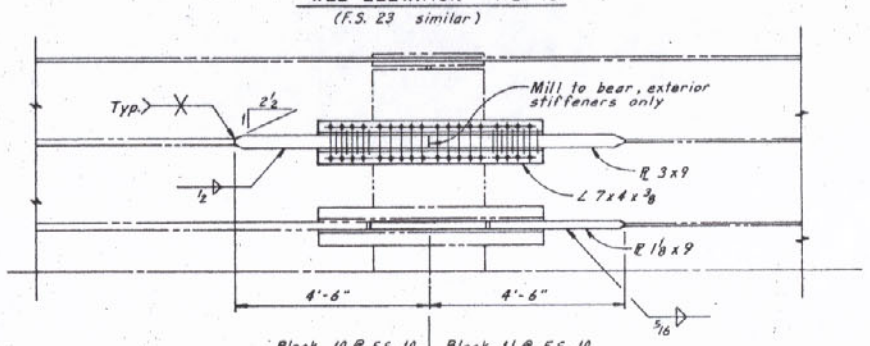

Block 10 @ F.S. 10	Block 11 @ F.S. 10
Block 24 @ F.S. 23	Block 23 @ F.S. 23

PLAN AT BOTTOM FLANGE F.S. 10
(F.S. 23 similar)

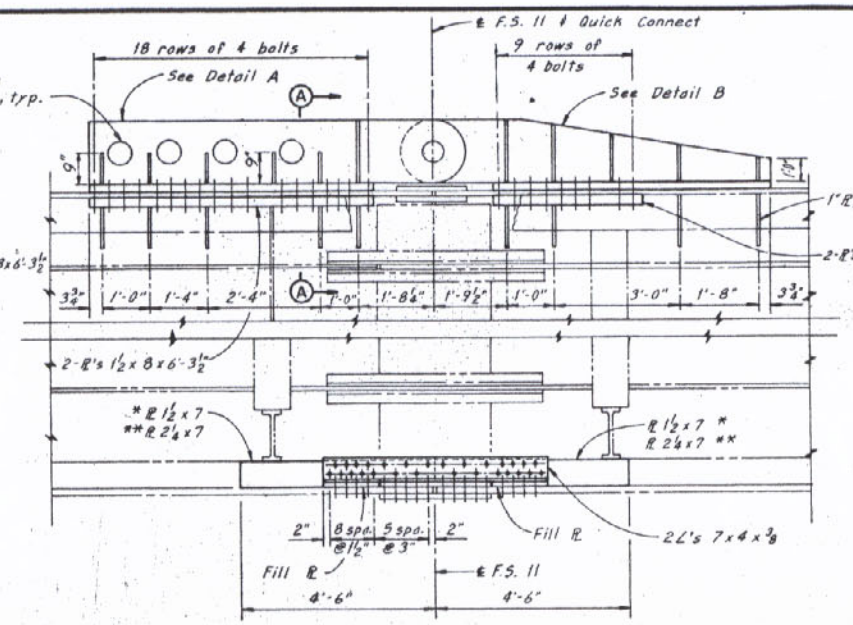

WEB ELEVATION F.S. 11
(F.S. 15, 18 & 22 similar)

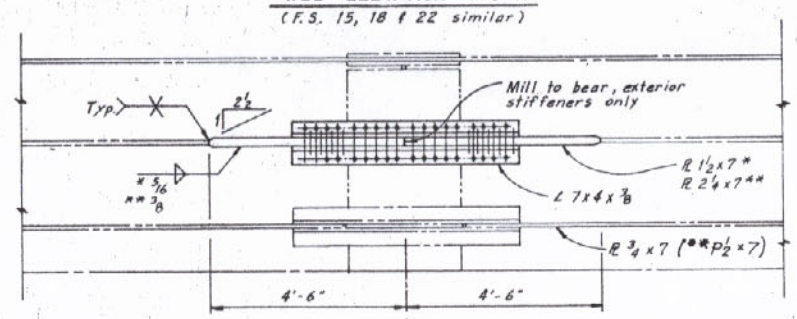

Block 11 @ F.S. 11	Block 12 @ F.S. 11
Block 23 @ F.S. 22	Block 22 @ F.S. 22
Block 15 @ F.S. 15	Block 16 @ F.S. 15
Block 19 @ F.S. 18	Block 18 @ F.S. 18

PLAN AT BOTTOM FLANGE F.S. 11
(F.S. 15, 18 & 22 similar)

* Denotes F.S. 11 & 22.
** Denotes F.S. 15 & 18.

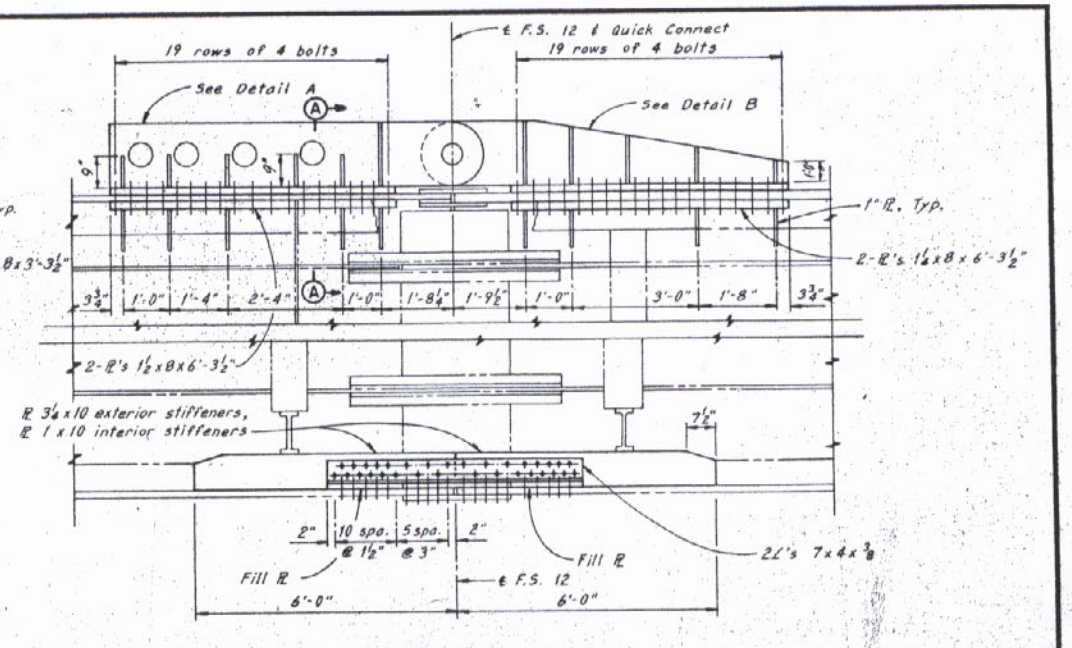

WEB ELEVATION F.S. 12
(F.S. 21 similar)

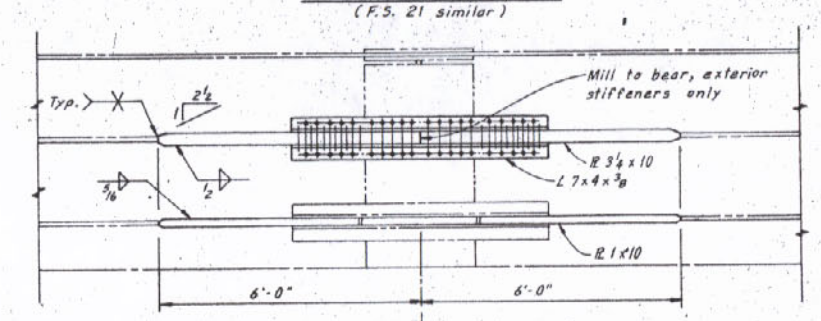

Block 12 @ F.S. 12	Block 13 @ F.S. 12
Block 22 @ F.S. 21	Block 21 @ F.S. 21

PLAN AT BOTTOM FLANGE F.S. 12
(F.S. 21 similar)

APPROVED
LOUIS A. GARRIDO
BRIDGE DESIGN ENGINEER
By REB Date SEP 1 4 1980

RECEIVED BY
FRIEDMAN & MEINHARD
CONSULTING ENGINEERS
DATE 10-10-80
BY E.S.

RECEIVED
OCT 7 1980

STATE OF LOUISIANA
DANIEL J. WATKINS
REG. NO. 13134
REGISTERED PROFESSIONAL ENGINEER IN CIVIL ENGINEERING

Note:
For Details A and B see Sheet EP20.
For Section A-A see Sheet EP21.

Date	Description	by
12-4-78	Temporary Stay Anchors	RCC

Revisions

ERECTOR
THE MELBOURNE BROTHERS CONSTRUCTION CO.
P.O. Box 2251 North Canton, Ohio 44720 216-494-1833

Owner - State of Louisiana
General Contractor - Williams Brothers Construction Co., Inc.
Fabricator - Ishikawajima - Harima Heavy Industries Co., Ltd.

QUICK CONNECT DETAILS

MISSISSIPPI RIVER BRIDGE (LULING)
MAINRIVER CROSSING SUPERSTRUCTURE
St. Charles Parish State Project No. 450-37-02

Date 8-21-78	Scale ½" = 1'-0"	Sheet No. EP18
Made By REJ	Chkd by DEH	Apprvd by

HNTB
HOWARD NEEDLES TAMMEN & BERGENDOFF

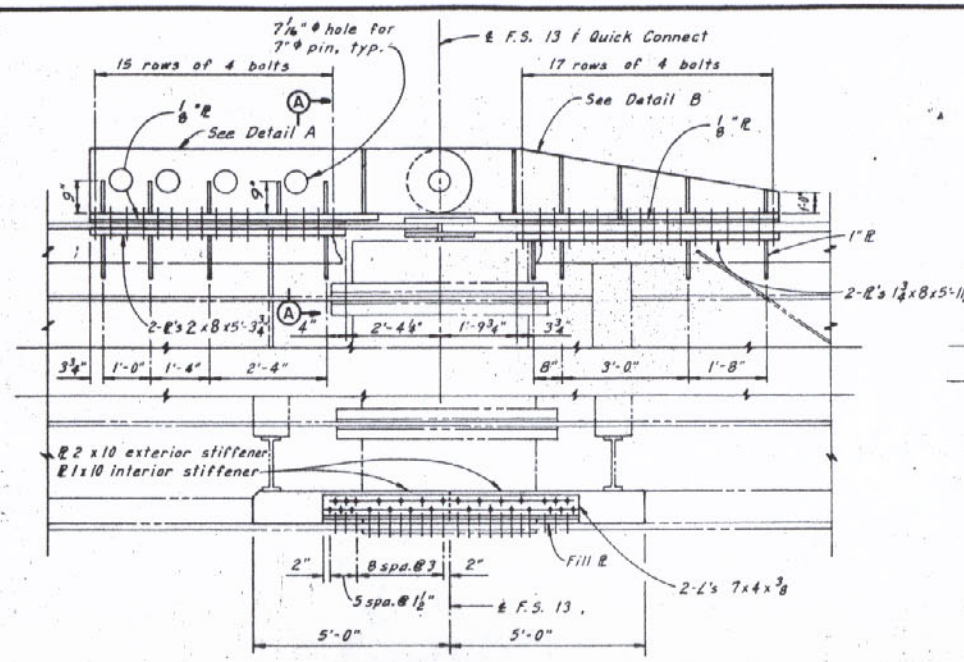

WEB ELEVATION F.S. 13
(F.S. 20 similar)

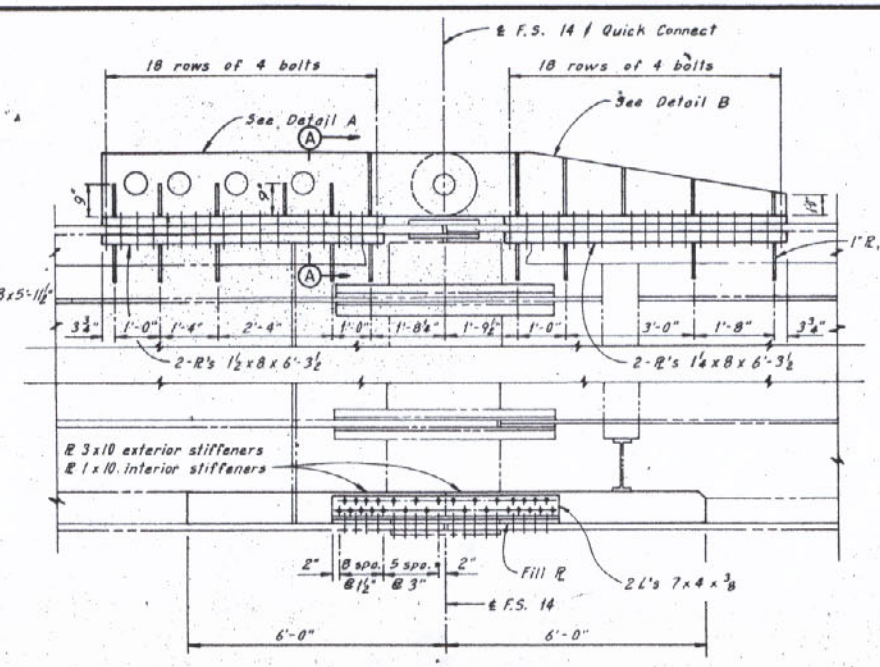

WEB ELEVATION F.S. 14
(F.S. 19 similar)

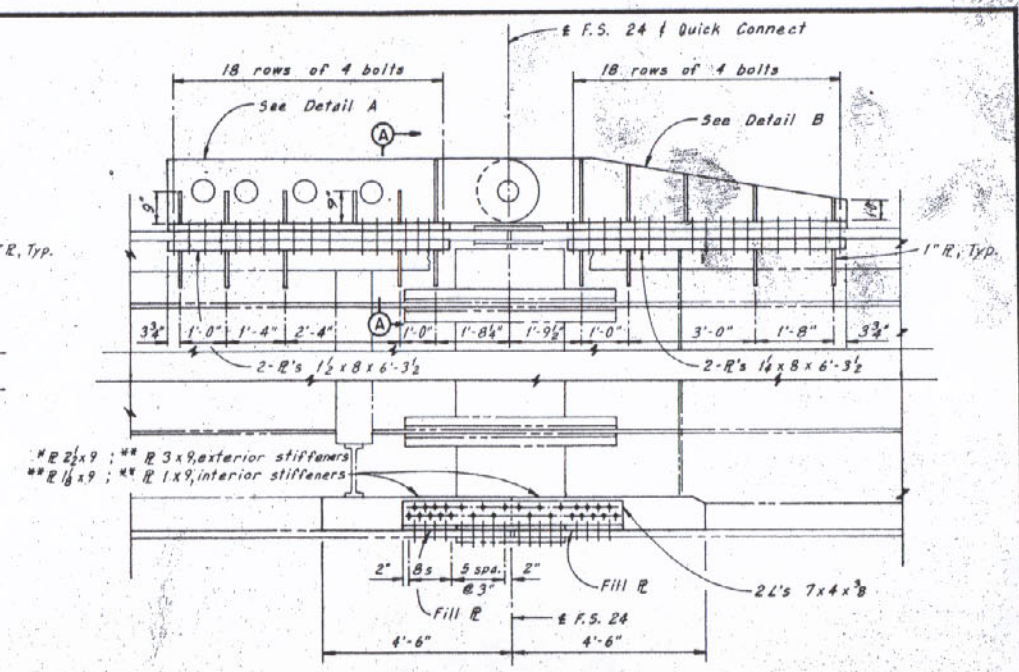

WEB ELEVATION F.S. 24
(F.S. 29 similar)

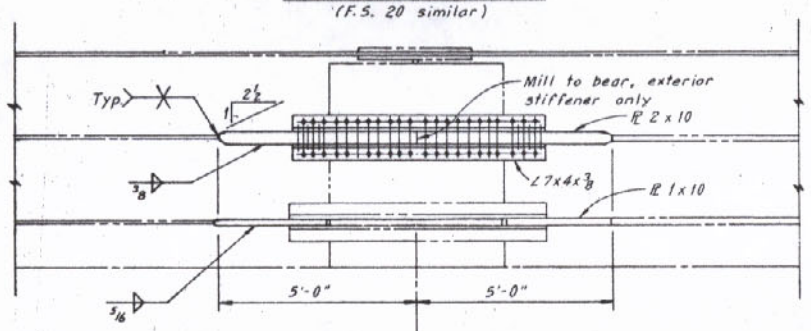

Block 13 @ F.S. 13	Block 14 @ F.S. 13
Block 21 @ F.S. 20	Block 20 @ F.S. 20

PLAN AT BOTTOM FLANGE F.S. 13
(F.S. 20 similar)

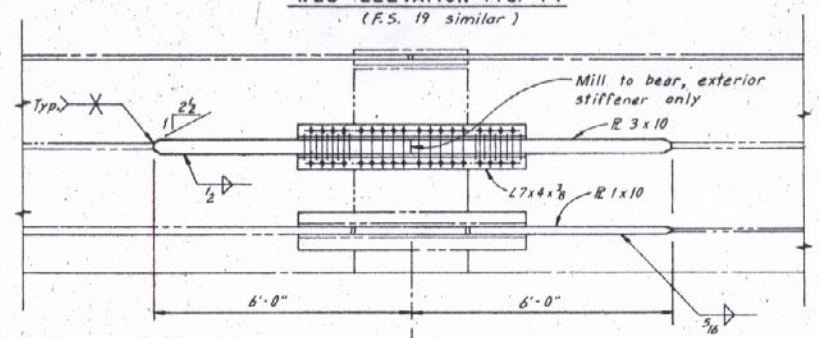

Block 14 @ F.S. 14	Block 15 @ F.S. 14
Block 20 @ F.S. 19	Block 19 @ F.S. 19

PLAN AT BOTTOM FLANGE F.S. 14
(F.S. 19 similar)

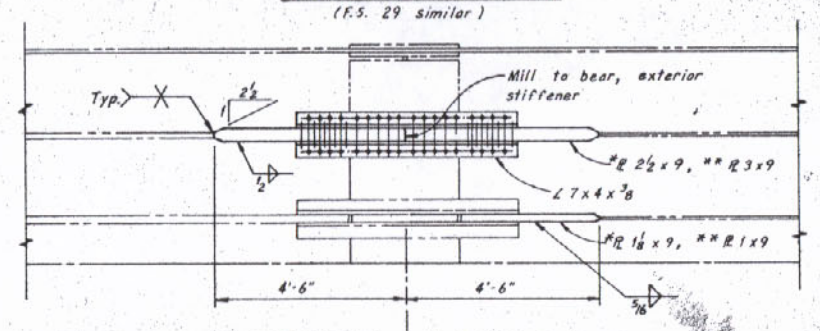

Block 24 @ F.S. 24	Block 25 @ F.S. 24
Block 30 @ F.S. 29	Block 29 @ F.S. 29

PLAN AT BOTTOM FLANGE F.S. 24
(F.S. 29 similar)

Note:
* denotes F.S. 24
** denotes F.S. 29

APPROVED
LOUIS A. GARRIDO
BRIDGE DESIGN ENGINEER
By REB Date SEP 1 4 1980

RECEIVED
OCT 7 1980

REVIEWED BY
[illegible]
DATE 10-10-80
BY E.S.

STATE OF LOUISIANA
DANIEL J. WATKINS
REG. NO. 13134
REGISTERED PROFESSIONAL ENGINEER IN CIVIL ENGINEERING

Note: 1
For Details A and B see Sheet EP20.
For Section A-A see Sheet EP21.

Date	Description	by
12-4-78	Temporary Stay Anchors	RCC

Revisions

HNTB
HOWARD NEEDLES TAMMEN & BERGENDOFF

ERECTOR
THE MELBOURNE BROTHERS CONSTRUCTION CO.
P.O. Box 2251 North Canton, Ohio 44720 216-494-1833

Owner - State of Louisiana
General Contractor - Williams Brothers Construction Co., Inc.
Fabricator - Ishikawajima - Harima Heavy Industries Co., Ltd.

QUICK CONNECT DETAILS

MISSISSIPPI RIVER BRIDGE (LULING)
MAINRIVER CROSSING SUPERSTRUCTURE
St. Charles Parish State Project No. 450-37-02

Date 8-25-78	Scale 1/2" = 1'-0"	Sheet No. EP19
Made By REA	Chkd by DEK	Apprvd by

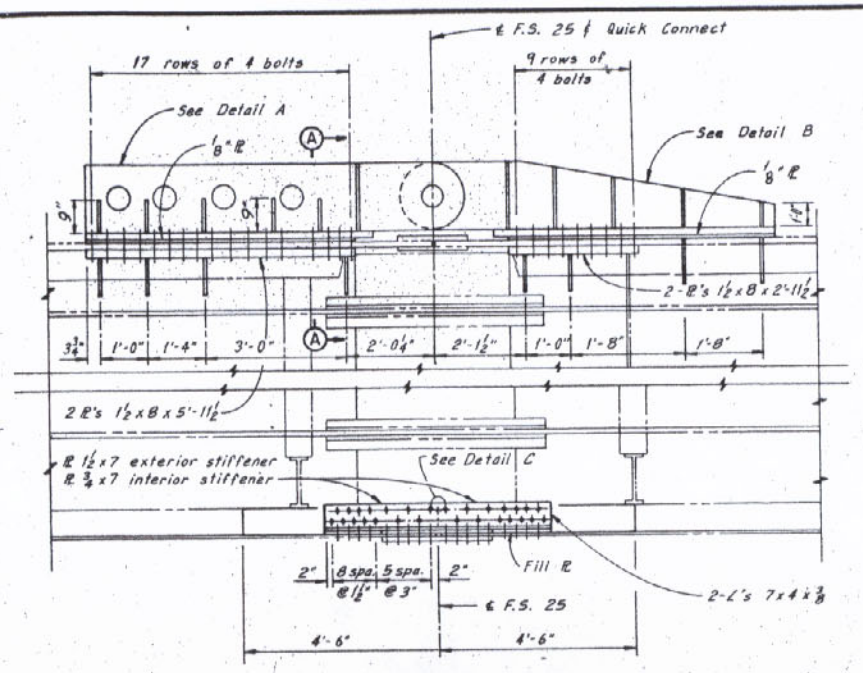

WEB ELEVATION F.S. 25

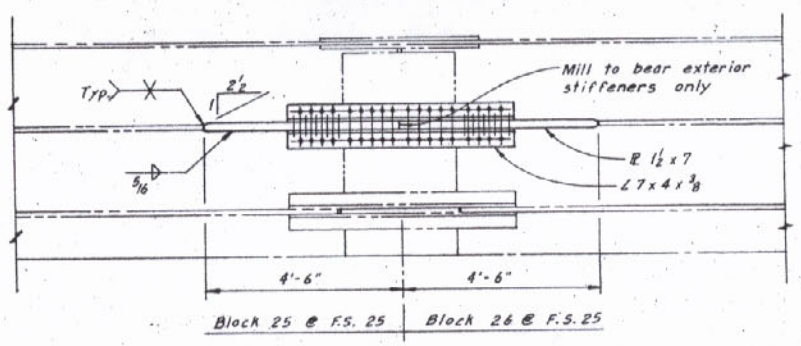

PLAN AT BOTTOM FLANGE F.S. 25

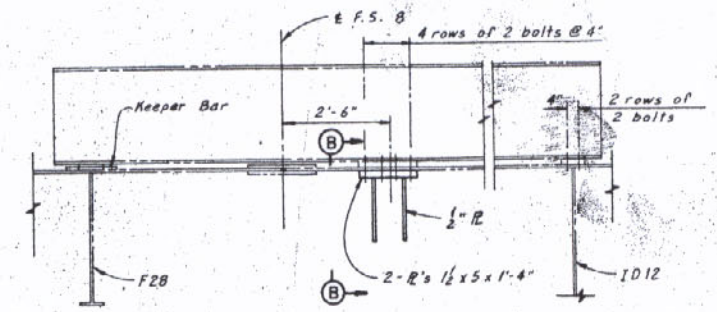

STRONGBACK ELEVATION F.S. 8

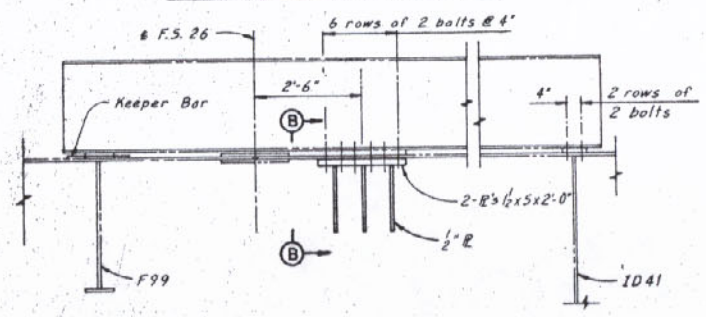

STRONGBACK ELEVATION F.S. 26

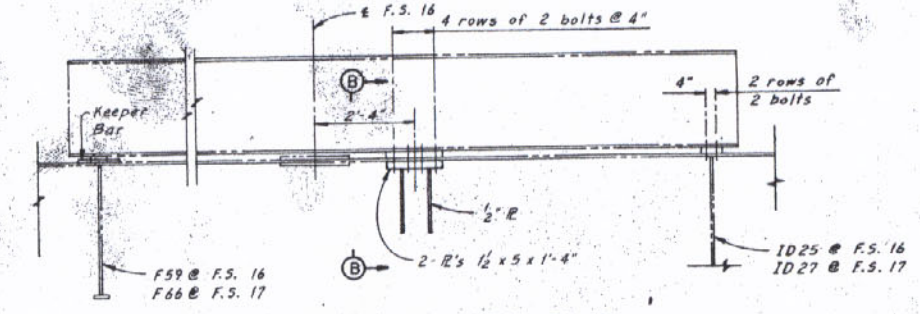

STRONGBACK ELEVATION F.S. 16

(Strongback @ F.S. 17 opposite hand)

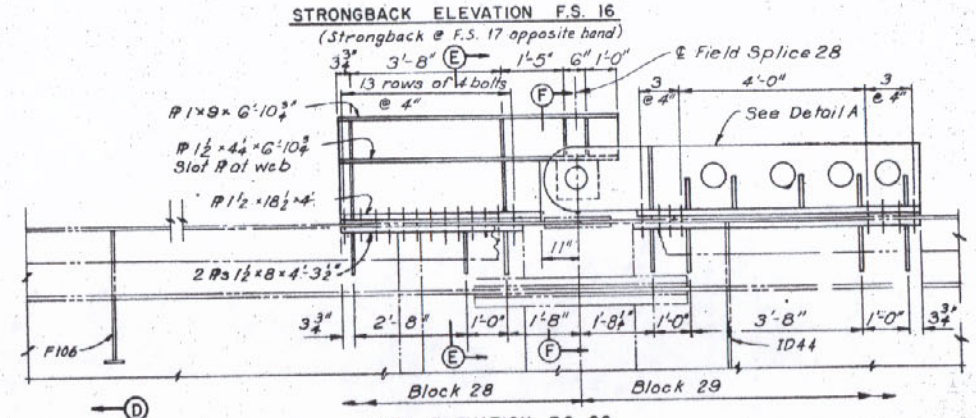

WEB ELEVATION F.S. 28

Note: For Sections E-E, D-D and F-F see Sheet EP21

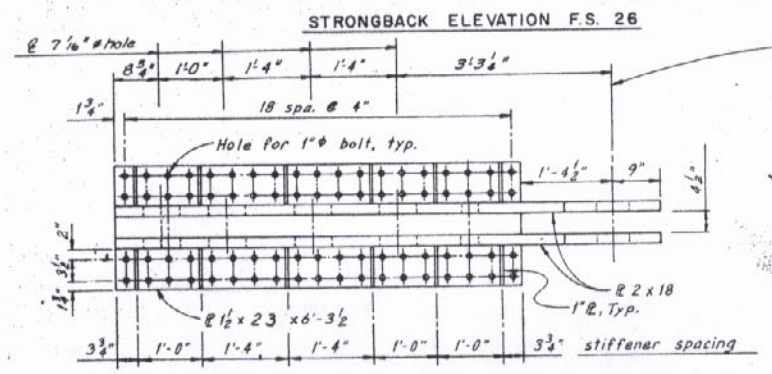

DETAIL A - PLAN

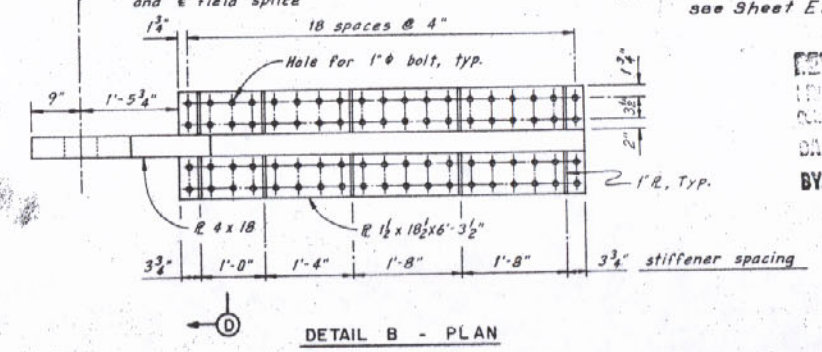

DETAIL B - PLAN

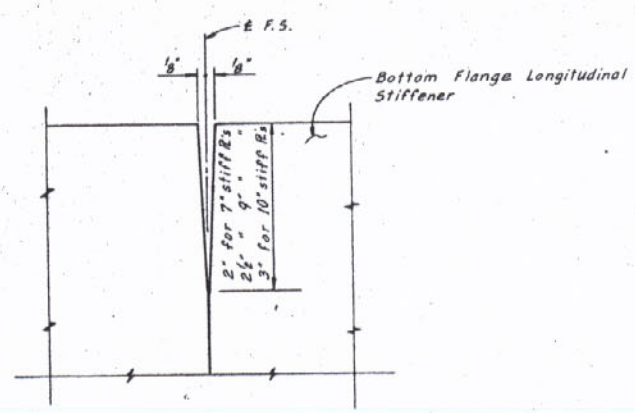

DETAIL C

(Exterior longitudinal stiffeners only)

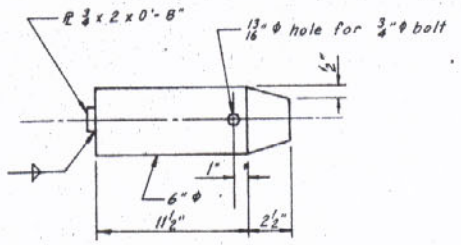

QUICK CONNECT PIN DETAIL

(1) Note:
Provide 24 sets of quick connects. The quick connects shall be match marked with the corresponding web at the time of shop assembly. One set of four quick connects will be re-used at each of the following splice locations:

Field Splice 10, 29 & 21
Field Splice 23, 12 & 19
Field Splice 24, 13 & 18
Field Splice *9, 22 & 14
Field Splice 25 & 15
Field Splice 11 & 20

* Cable anchorage side only

Drilling of all pin holes shall be done after all welding is completed.

The full penetration groove weld connecting the pin plates to the base plate of all quick connects shall be ultrasonically tested for weld flaws.

(1) Note:
Milled to bear surfaces shall meet the American National Standards Institute surface roughness requirements as defined in ANSI B46.1, Surface Roughness Waviness and Lay, Part I equal to ANSI 500.

Note:
All pin and pin hole surfaces shall meet the American National Standards Institute surface roughness requirements as defined in ANSI B46.1, Surface Roughness Waviness and Lay, Part I equal to ANSI 125.

APPROVED
LOUIS A. GARRIDO
BRIDGE DESIGN ENGINEER
By REB Date SEP 1 4 1980

REVIEWED BY
DATE 10-10-80
BY E.S.

RECEIVED
OCT 7 1980

STATE OF LOUISIANA
DANIEL J. WATKINS
REG. NO. 13134
REGISTERED PROFESSIONAL ENGINEER
CIVIL ENGINEERING

Date	Description	by
10-26-78	Notes & FS 28	

Revisions

ERECTOR
THE MELBOURNE BROTHERS CONSTRUCTION CO.
P.O. Box 2251 North Canton, Ohio 44720 216-494-1833

Owner - State of Louisiana
General Contractor - Williams Brothers Construction Co., Inc.
Fabricator - Ishikawajima - Harima Heavy Industries Co., Ltd.

QUICK CONNECT DETAILS

MISSISSIPPI RIVER BRIDGE (LULING)
MAINRIVER CROSSING SUPERSTRUCTURE
St. Charles Parish State Project No. 450-37-02

Date 8-31-78	Scale None	Sheet No. EP 20
Made By REB	Chkd by DEA	Apprvd by

HNTB

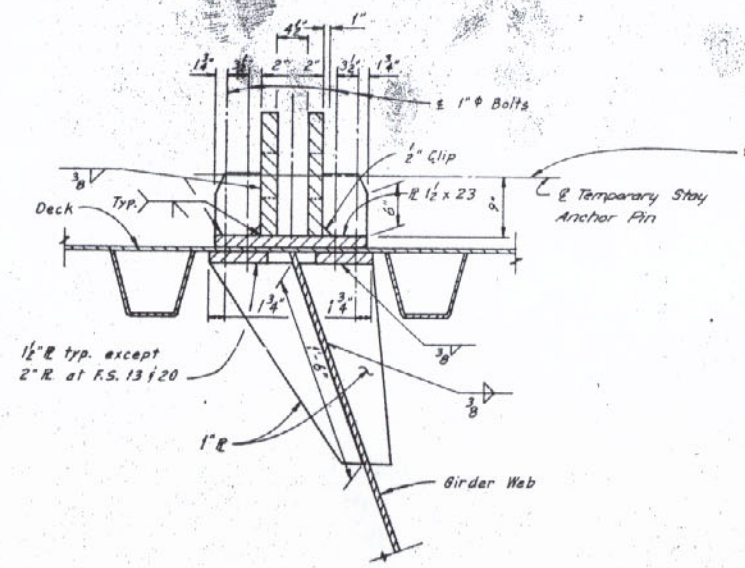

SECTION A-A

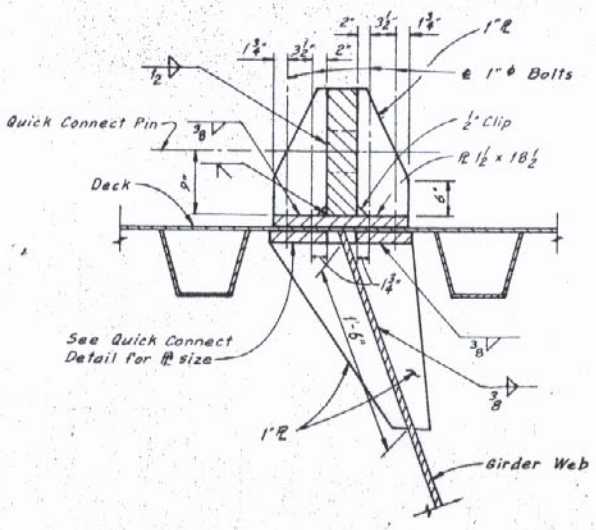

SECTION D-D

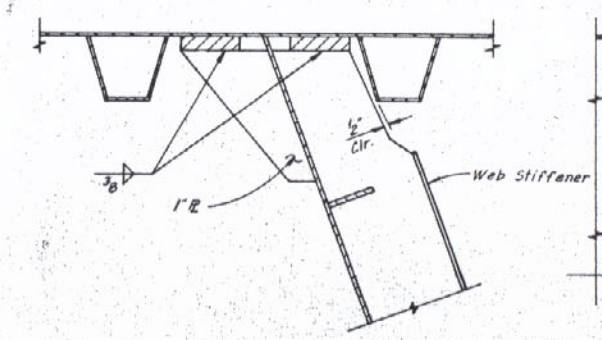

SECTION NEAR WEB STIFFENER

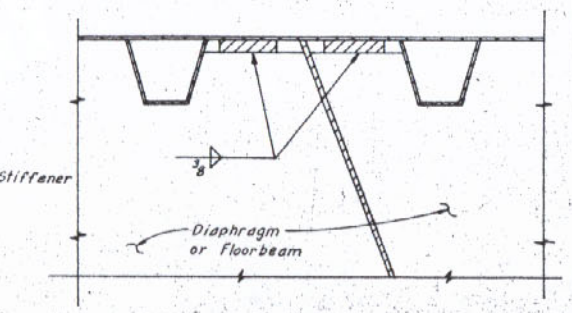

SECTION NEAR DIAPHRAGM

SECTIONS THRU QUICK CONNECTS

Note: Outside web of a box girder shown, inside web similar.

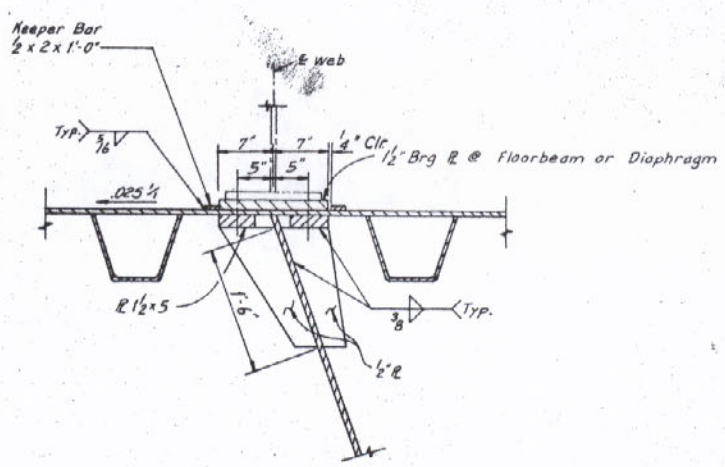

SECTION B-B

Note: Outside web shown, Inside web similar

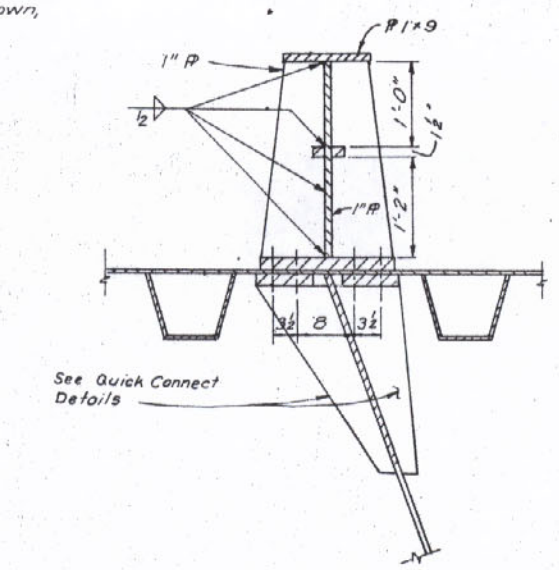

SECTION E-E

SECTION THRU STRONGBACKS

TYPICAL SECTIONS

Note: Outside web of a box girder shown, inside web similar.

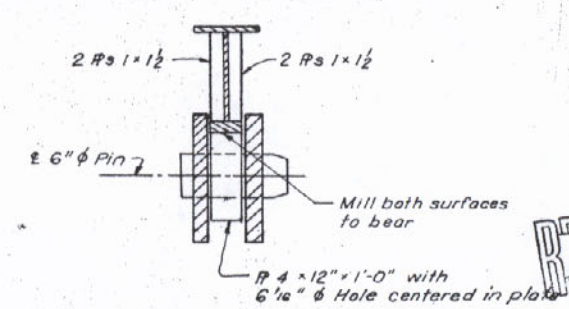

SECTION F-F

Summary of Structural Steel Added

FS 8	470 Lbs.
FS 10	8,460 Lbs.
FS 11	5,760 Lbs.
FS 12	11,020 Lbs.
FS 13	8,250 Lbs.
FS 14	9,750 Lbs.
FS 15	6,620 Lbs.
FS 16	470 Lbs.
FS 17	470 Lbs.
FS 18	6,620 Lbs.
FS 19	9,750 Lbs.
FS 20	8,250 Lbs.
FS 21	11,020 Lbs.
FS 22	5,760 Lbs.
FS 23	8,460 Lbs.
FS 24	7,910 Lbs.
FS 25	5,300 Lbs.
FS 26	710 Lbs.
FS 28	740 Lbs.
FS 29	8,370 Lbs.
Total:	124,160 Lbs.

RECEIVED OCT 7 1980

REVIEWED BY
RICHARD G. MINNARD
CONSULTING ENGINEERS
DATE 10-10-80
BY E.S.

APPROVED
LOUIS A. GARRIDO
BRIDGE DESIGN ENGINEER
SEP 14 1980
By REB Date

STATE OF LOUISIANA
DANIEL J. WATKINS
REG. NO. 13134
REGISTERED PROFESSIONAL ENGINEER IN CIVIL ENGINEERING

Date	Description	by
12-4-78	Temporary Stay Anchors	RCC

Revisions

ERECTOR
THE MELBOURNE BROTHERS CONSTRUCTION CO.
P.O. Box 2251 North Canton, Ohio 44720 216-494-1833

Owner - State of Louisiana
General Contractor - Williams Brothers Construction Co., Inc.
Fabricator - Ishikawajima - Harima Heavy Industries Co., Ltd.

QUICK CONNECT DETAILS

MISSISSIPPI RIVER BRIDGE (LULING)
MAINRIVER CROSSING SUPERSTRUCTURE
St. Charles Parish State Project No. 450-37-02

Date 9-1-78	Scale None	Sheet No. EP 21
Made By REB	Chkd by MDM	Apprvd by

HNTB
HOWARD NEEDLES TAMMEN & BERGENDOFF

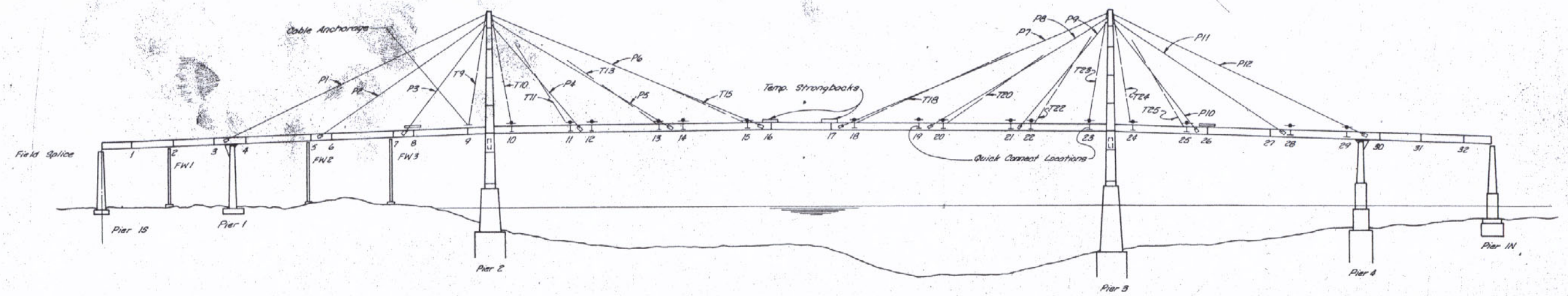

ELEVATION

			T11	T13	T15	P1 West	P1 East	P2	P3	P4	P5	P6
Add Stay P3, T11			452.8						942			
Sag									0.78			
Add Block 12			831.4						1224			
Sag									0.60			
Add Stay P4 Remove T11			0						1309	984		
Sag									0.56	0.74		
Add Block 13									1843	1779		
Sag									0.40	0.41		
Add Stay P2 and T13				476.9				854	1178	1176		
Sag								1.88	0.62	0.62		
Add Block 14				1324.7				1736	1397	1679		
Sag								0.92	0.52	0.43		
Add Stay P5 Remove T13				0				1653	1396	1146	1732	
Sag								0.97	0.52	0.63	1.96	
Add Half P1 Block 15						1408		1244	1356	1110	2772	
Sag						2.82		1.29	0.54	0.65	1.22	
Add Half P1 -- T15					860.8	949	871	974	1266	1183	1709	
Sag						4.28	4.66	1.64	0.58	0.61	1.98	
Add Block 16					1,448.9	1158	1724	1104	1311	1080	2470	
Sag						3.51	2.36	1.45	0.56	0.67	1.37	
Add Stay P6					945.2	1141	1706	1089	1283	1153	1792	1010
Sag						3.56	2.38	1.47	0.57	0.63	1.89	4.67
Add Block 17, Rem. T15, T18					1,079.0	1528	1804	1149	1297	1117	1930	1325
Sag						2.66	2.25	1.40	0.56	0.65	1.76	3.56
Seat P1 and P12 Remove T15	and T18					1553	1553	1114	1366	1153	2448	1728
Sag						2.61	2.61	1.44	0.54	0.63	1.39	2.73
Add Curbs Med. and Frg. Pc						1717	1717	1221	1412	1266	2732	1890
Sag						2.36	2.36	1.31	0.52	0.57	1.24	2.50
Add Wearing Surface						2002	2002	1498	1653	1477	3328	2242
Sag						2.03	2.03	1.07	0.44	0.49	1.02	2.10
Add Cable Grout, Handrail						2025	2025	1515	1664	1490	3366	2267
Sag						2.41	2.41	1.41	0.58	0.63	1.33	2.60

	T18	T20	T22	T23	T24	T25	P7	P8	P9	P10	P11	P12	P12
Add Block 24 Stay T23-24				24.0	21.2								
Add Blocks 23, 25 Stay T22-25			146.9	10.8	47.8	112.5							
Add Blocks 22 and 26			412.7	20.4	56.8	341.9							
Add Stay P9 and P10			0	0	0	0			979	956			
Sag									0.74	0.76			
Add Blocks 21, 27, 28, T20									1745	1929			
Sag									0.42	0.38			
Add Stay P11, and Jack T20		457.1							1110	1610	517		
Sag									0.65	0.45	3.10		
Add Stay P11 and Block 20		1228.5							1590	1476	1611		
Sag									0.46	0.50	1.00		
Add Stay P8 Remove T20		0						1658	1103	1492	1575		
Sag								2.05	0.66	0.49	1.02		
Add Half Stay P2, Bl. 19								2660	1076	1468	1298	1224	
Sag								1.28	0.68	0.50	1.24	3.18	
Add Stay T18	772.8							1704	1169	1428	1312	1280	
Sag								1.99	0.62	0.51	1.22	3.04	
Add Block 18	1,348.4							2423	1050	1523	1715	1882	
Sag								1.40	0.69	0.48	0.93	2.07	
Add Half P12 and P7	919.2						899	1844	1109	1412	1196	863	1680
Sag							5.25	1.84	0.66	0.52	1.34	4.51	2.32
Add Block 11 Adjust P12	1,064.4						1190	1998	1072	1432	1240	1009	1987
Sag							3.96	1.70	0.68	0.51	1.29	3.86	1.96
Seat P1 and P12 Remove T15	and T18						1752	2449	1125	1519	1291	1439	1439
Sag							2.69	1.38	0.65	0.48	1.24	2.71	2.71
Add Curbs Med. and Frg. Pc							1911	2733	1247	1538	1344	1732	1732
Sag							2.47	1.24	0.58	0.47	1.19	2.25	2.25
Add Wearing Surface							2256	3328	1472	1648	1479	2025	2025
Sag							2.09	1.02	0.49	0.44	1.08	1.92	1.92
Add Cable Grout, Handrail							2280	3366	1486	1653	1487	2048	2048
Sag							2.59	1.33	.63	.58	1.42	2.28	2.28

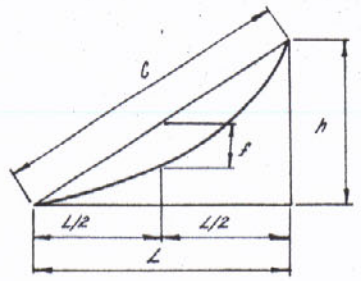

$f = \frac{wc^2}{8T}$

f = sag length, ft.
w = weight per ft, kips per ft
c = chord length, ft.
T = cable tension, kips.

Note: Stay loads are in kips, plus denotes tension.
Loads for permanent stays are for all cables at the end of a crossgirder except P1A, P1B, P12A & P12B which are for two cables.
Loads shown for temporary stays are the total load per box girder and represent the stay load at two girder webs.

APPROVED
L. J. ALARADO
FOR DESIGN ENGINEER
BY REB DATE SEP 1 1980

CHECKED BY
PROFESSIONAL ENGINEER
DATE 10-10-80
BY E.S.

STATE OF LOUISIANA
DANIEL J. WATKINS
REG NO 13134
REGISTERED
PROFESSIONAL ENGINEER
IN
CIVIL ENGINEERING

RECEIVED
OCT 7 1980

Date	Description	by
8-11-80	General	EL-K
3-11-80	General	

Revisions

ERECTOR
THE MELBOURNE BROTHERS CONSTRUCTION CO.
P.O. Box 2251 North Canton, Ohio 44720 216-494-1833

Owner - State of Louisiana
General Contractor - Williams Brothers Construction Co., Inc.
Fabricator - Ishikawajima - Harima Heavy Industries Co., Ltd.

CABLE ERECTION LOADS

MISSISSIPPI RIVER BRIDGE (LULING)
MAINRIVER CROSSING SUPERSTRUCTURE
St. Charles Parish State Project No. 450-37-02

Date	Scale	Sheet No. EP 23
Made By	Chkd by	Approved by

CABLE GEOMETRY

CABLE NO.	VERTICAL DIMENSIONS (FEET) DECK W. P. FAB. ELEV.	DECK W. P. DEFL.	TOWER W. P. FAB. ELEV.	TOWER W. P. DEFL.	VERTICAL DISTANCE BETWEEN W.P.s FEET	LONGITUDINAL DIMENSIONS DECK W. P. X-CO	DECK W. P. DEFL.	TOWER W. P. AS-BUILT	TOWER W. P. DEFL.	LONGIT. DISTANCE BETWEEN W. P.s FEET	DISTANCE ℄ BRIDGE TO ℄ W. P.s DECK WP FEET	TOWER WP FEET	TRANSVERSE DISTANCE BETWEEN W. P.s FEET	CHORD DECK W.P. TO TOWER W.P. FEET	SHIMS DECK SOCKET FEET	SHIMS TOWER SOCKET FEET	DIST. FROM W. P. TO FACE OF SOCKET DECK FEET	DIST. FROM W. P. TO FACE OF SOCKET TOWER FEET	CHORD DECK SOCKET TO TOWER SOCKET FEET	L FEET
NOTE	1	2	3	4		1	△5 △6	3	6		1	3					7	8		9
1	147.423	-.001	395.261	-.011	247.729	515.047	+0.021	0.110	-0.604	514.574	45.003	29.464	15.539	571.312	0.500	0.	5.5	3.682	590.994	523,533
2	154.293	-.017	383.011	-0.11	228.625	330.036	+0.021	0.104	-0.531	329.630	45.000	30.652	14.348	401.412	0.333	0.	4.417	3.842	410.004	337.004
3	159.405	-.010	371.259	-0.11	211.754	165.074	+0.021	0.099	-0.479	164.715	45.013	31.789	13.224	268.600	0.333	0.	3.25	4.751	276.934	170.372
4	166.874	-.084	371.259	-0.11	204.359	176.697	-0.021	-0.099	+0.479	177.053	45.034	31.789	13.245	270.714	0.333	0.	3.25	4.632	278.929	182.936
5	169.084	-.207	383.011	-0.11	214.024	353.194	-0.021	-0.104	+0.531	353.600	44.979	30.652	14.327	413.575	0.333	0.	4.417	3.706	422.031	361.126
6	170.174	-.277	395.261	-0.11	225.254	529.735	-0.021	-0.110	+0.604	530.208	45.008	29.464	15.544	576.283	0.500	0.	5.5	3.354	595.637	539.046
7	170.204	-.271	395.336	-0.11	225.293	529.472	-0.010	-0.006	0.510	529.966	45.013	29.489	15.524	576.075	0.500	0.	5.5	3.354	585.429	538.802
8	169.101	-.199	383.085	-0.11	214.073	353.223	-0.010	-0.008	0.448	353.653	45.000	30.676	14.324	413.646	0.333	0.	4.417	3.706	422.102	361.179
9	166.911	-.078	371.336	-0.11	204.393	176.678	-0.010	-0.010	0.396	177.054	45.030	31.812	13.218	270.739	0.333	0.	3.25	4.632	278.954	182.934
10	159.434	-.013	371.336	-0.11	211.805	164.903	+0.010	0.010	-0.396	164.527	45.016	31.812	13.204	268.523	0.333	0.	3.25	4.751	276,857	170.179
11	154.318	-.010	383.085	-0.11	228.667	330.007	+0.010	0.008	-0.448	329.577	45.032	30.676	14.356	401.392	0.333	0.	4.417	3.842	409.984	336.951
12	147.937	0.	395.336	-0.11	247.289	501.983	+0.010	-0.006	-0.510	501.489	45.033	29.489	15.544	559.361	0.500	0.	5.50	3.698	569.059	510.429

CABLE PROPERTIES

CABLE NO.	DEAD LOAD KIPS	NO. OF STRANDS PER CABLE	NO. OF WIRES PER STRAND ↓" ϕ	AREA OF CABLE WIRE Sq. In.	CABLE WEIGHTS WIRE LB/FT	P.E. PIPE LB/FT	SPACER STRAND LB/FT	GROUT LB/FT	CABLE WEIGHT W/O GROUT LB/FT	CABLE WEIGHT WITH GROUT LB/FT	CABLE SAG LENGTH (WITH GROUT) FEET	TC/AE FEET	FABRICATED CABLE LENGTHS Cables 2,3,6,7,10,11 FEET	Cables 1,4,5,8,9,12 Stays 5 & 7 FEET	Cables 1,4,5,8,9,12 Stays 1 & 3 FEET
NOTE	7	7	7	10	10	10	10	10			11		12	△13	△13
1	4050	4	271	53.22	181.0	11.0	0.5	38.6	192.5	231.1	581.012	1.525	579.49	579.55	579.42
2	1515	2	211	20.72	70.5	5.5	0.3	24.4	76.3	100.7	410.010	1.034	408.98	—	—
3	1664	2	211	20.72	70.5	5.5	0.3	24.4	76.3	100.7	276.935	0.767	276.17	—	—
4	1490	4	103	20.23	68.8	5.4	0.5	22.0	74.7	96.7	278.930	0.708	278.22	278.34	278.10
5	3366	4	211	41.44	140.9	11.0	0.5	48.8	152.4	201.2	422.037	1.182	420.86	420.94	420.77
6	2267	2	307	30.15	102.5	7.3	0.3	27.6	110.1	137.7	585.659	1.518	584.14	—	—
7	2280	2	307	30.15	102.5	7.3	0.3	27.6	110.1	137.7	585.451	1.527	583.92	—	—
8	3366	4	211	41.44	140.9	11.0	0.5	48.8	152.4	201.2	422.108	1.182	420.93	421.01	420.84
9	1486	4	103	20.23	68.8	5.4	0.5	22.0	74.7	96.7	278.955	0.707	278.25	278.37	278.13
10	1653	2	211	20.72	70.5	5.5	0.3	24.4	76.3	100.7	276.858	0.762	276.10	—	—
11	1487	2	211	20.72	70.5	5.5	0.3	24.4	76.3	100.7	409.990	1.015	408.98	—	—
12	4096	4	271	53.22	181.0	11.0	0.5	36.6	192.5	231.1	569.075	1.510	567.57	567.63	567.50

Note:
Cable length A corresponds to A-line, IHI drawing F-114 and represents the length of the stay cables on the west side of the bridge.

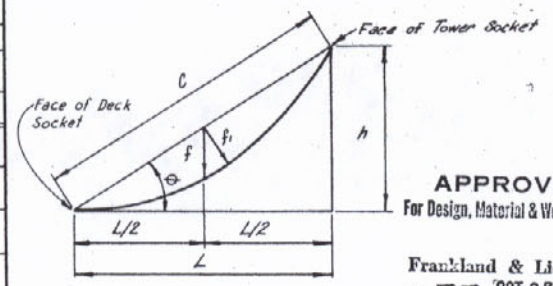

Sag Length $= S = C\left[1 + \frac{1}{24}\left(\frac{WL^2}{TC}\right)^2\right]$

Fabricated Length $= F = S - \frac{TC}{AE}$

W = weight per foot, kips per foot
T = cable tension, kips
A = cable area, sq. in.
E = 29,000 ksi
C = chord length deck socket to tower socket
L = (horizontal distance between W.P.s^2 + transverse distance between W.P.s^2)$^{1/2}$

APPROVED
For Design, Material & Workmanship
Frankland & Lienhard
By T. T. OCT 23 1980

STATE OF LOUISIANA — DANIEL L. WATKINS — REG NO 13134 — REGISTERED PROFESSIONAL ENGINEER IN CIVIL ENGINEERING

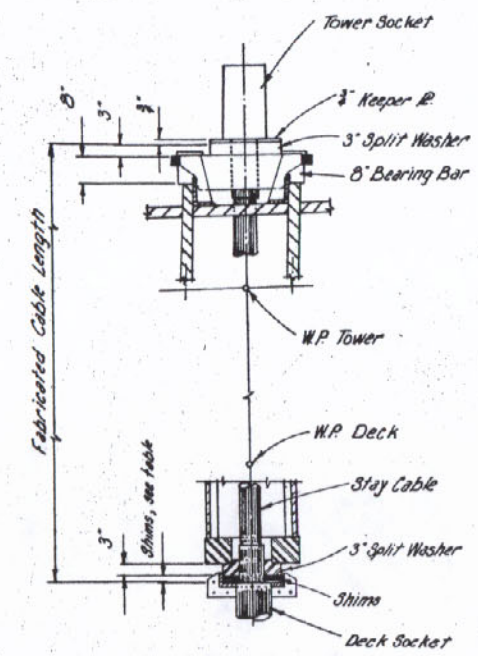

CABLE LENGTH DETAIL

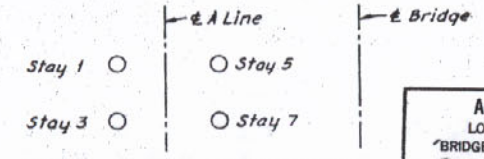

△ CABLE STAY CONFIGURATION

APPROVED
LOUIS A. GARRIDO
BRIDGE DESIGN ENGINEER
By RFB Date NOV 7 R

Note:

1. See IHI Drawing F114.
2. Difference between as-built camber and dead load deflection, see F and L calculations.
3. See As-Built Tower Sheet S-4.
4. See Dead Load Camber Tower Contract Plan Sheets 12 and 12a.
5. See HNTB Plane Frame Analysis.
6. See Contract Plan Sheets 8-1 and 8-2.
7. See Contract Plan Sheet 16B and C does not include shim thickness.
8. See IHI Saddle Drawings S-32, S-34 and S-36.
9. (Long. Dist.^{2} + Trans. Dist.^{2})$^{1/2}$.
10. Information furnished by Prescon Corporation.
11. See formula for cable sag length.
12. Cable Sag Length — TC/AE.
13. △ Fabricated Stay Length, See IHI Drawing S-32, S-34 and S-36 Cables 1 and 12 = Column 12 ± 0.067, Cables 4 and 9 = Column 12 ± 0.121 Cables 5 and 8 = Column 12 ± 0.086

Date	Description	by
10-3-80	Adjust Cables 1,4,5,8,9 & 12	MDM
9-23-80	Correct Long. deck W.P. defl.	MDM
8-20-80	Add Long. W.P. Defl.	MDM
8-1-80	Delete long. deck W.P. defl.	MDM
7-25-80	General	MDM
4-11-80	General	MGH
3-11-80	General	

Revisions

ERECTOR
THE MELBOURNE BROTHERS CONSTRUCTION CO.
P.O. Box 2251 North Canton, Ohio 44720 216-494-1833

Owner - State of Louisiana
General Contractor - Williams Brothers Construction Co., Inc.
Fabricator - Ishikawajima - Harima Heavy Industries Co., Ltd.

FABRICATED CABLE LENGTH - A

MISSISSIPPI RIVER BRIDGE (LULING)
MAINRIVER CROSSING SUPERSTRUCTURE
St. Charles Parish State Project No. 450-37-02

Date 1-3-80 | Scale None | Sheet No. EP 24-A
Made By RCF | Chkd by MDM | Apprvd by

CABLE GEOMETRY

CABLE NO.	VERTICAL DIMENSIONS (FEET) DECK W. P. FAB. ELEV.	DECK W. P. DEFL.	TOWER W. P. FAB. ELEV.	TOWER W. P. DEFL.	VERTICAL DISTANCE BETWEEN W.P.s FEET	LONGITUDINAL DIMENSIONS DECK W. P. X-CO	DECK W. P. DEFL.	TOWER W. P. AS-BUILT	TOWER W. P. DEFL.	LONGIT. DISTANCE BETWEEN W. P.s FEET	DISTANCE ℄ BRIDGE TO ℄ W. P.s DECK WP FEET	TOWER WP FEET	TRANSVERSE DISTANCE BETWEEN W. P.s FEET	CHORD DECK W.P. TO TOWER W.P. FEET	SHIMS DECK SOCKET FEET	TOWER SOCKET FEET	DIST. FROM W. P. TO FACE OF SOCKET DECK FEET	TOWER FEET	CHORD DECK SOCKET TO TOWER SOCKET FEET	L FEET
NOTE	1	2	3	4		1	△5 △4	3	6		1	3					7	8		9
1	147.424	-.001	395.257	-0.11	247.724	515.055	+0.021	0.145	-0.604	514.617	45.059	29.494	15.565	571.349	0.500	0.	5.50	3.682	581.031	523.577
2	154.307	-.017	323.003	-0.11	228.603	330.079	+0.021	0.143	-0.531	329.711	45.049	30.680	14.369	401.466	0.333	0.	4.417	3.842	410.058	337.087
3	159.416	-.010	371.252	-0.11	211.736	165.064	+0.021	0.141	-0.479	164.747	45.034	31.815	13.219	268.605	0.333	0.	3.25	4.751	276.939	170.404
4	166.868	-.084	371.252	-0.11	204.358	176.714	-0.021	-0.141	0.479	177.031	45.025	31.815	13.210	270.697	0.333	0.	3.25	4.632	278.912	182.911
5	169.101	-.207	323.003	-0.11	213.999	353.220	-0.021	-0.143	0.531	353.587	45.036	30.680	14.356	413.652	0.333	0.	4.417	3.706	422.008	361.114
6	170.165	-.277	395.257	-0.11	225.259	529.742	-0.021	-0.145	0.604	530.180	45.010	29.494	15.516	576.258	0.500	0.	5.50	3.354	585.612	539.017
7	170.200	-.271	395.318	-0.11	225.279	529.472	-0.010	0.051	0.510	530.023	45.007	29.479	15.528	576.122	0.500	0.	5.50	3.354	585.476	538.860
8	169.107	-.199	323.064	-0.11	214.046	353.180	-0.010	0.056	0.448	353.674	45.026	30.666	14.360	413.651	0.333	0.	4.417	3.706	422.107	361.201
9	166.897	-.078	371.339	-0.11	204.410	176.724	-0.010	0.062	0.396	177.172	44.987	31.202	13.185	270.827	0.333	0.	3.25	4.632	279.042	183.051
10	159.440	-.013	371.339	-0.11	211.802	164.919	+0.010	-0.062	-0.396	164.471	45.049	31.802	13.247	268.489	0.333	0.	3.25	4.751	276.823	170.125
11	154.317	-.010	323.064	-0.11	228.647	330.014	+0.010	-0.056	-0.448	329.520	45.008	30.666	14.342	401.334	0.333	0.	4.417	3.842	409.926	336.893
12	147.885	-0.	395.318	-0.11	247.323	501.990	+0.010	-0.051	-0.510	501.439	45.013	29.479	15.534	559.331	0.500	0.	5.50	3.698	569.029	510.378

CABLE PROPERTIES

CABLE NO.	DEAD LOAD KIPS	NO. OF STRANDS PER CABLE	NO. OF WIRES PER STRAND 4" ϕ	AREA OF CABLE WIRE Sq. In.	CABLE WEIGHTS WIRE LB/FT	P.E. PIPE LB/FT	SPACER STRAND LB/FT	GROUT LB/FT	CABLE WEIGHT W/O GROUT LB/FT	CABLE WEIGHT WITH GROUT LB/FT	CABLE SAG LENGTH (WITH GROUT) FEET	TC/AE FEET	FABRICATED CABLE LENGTHS Cables 2,3,6,7,10,11 FEET	Cables 1,4,5,8,9,12 Stays 6 & 8 FEET	Stays 2 & 4 FEET
NOTE	7	7	7	10	10	10	10	10			11		12	△13	△13
1	4050	4	271	53.22	181.0	11.0	0.5	38.6	192.5	231.1	581.049	1.525	579.524	579.59	579.46
2	1515	2	211	20.72	70.5	5.5	0.3	24.4	76.3	100.7	410.064	1.034	409.03	—	—
3	1664	2	211	20.72	70.5	5.5	0.3	24.4	76.3	100.7	277.937	0.767	276.17	—	—
4	1490	4	103	20.23	68.8	5.4	0.5	22.0	74.7	96.7	278.913	0.708	278.21	278.33	278.08
5	3366	4	211	41.44	140.9	11.0	0.5	48.8	152.4	201.2	422.014	1.182	420.83	420.92	420.75
6	2267	2	307	30.15	102.5	7.3	0.3	27.6	110.1	137.7	585.634	1.518	584.12	—	—
7	2280	2	307	30.15	102.5	7.3	0.3	27.6	110.1	137.7	585.498	1.527	583.97	—	—
8	3366	4	211	41.44	140.9	11.0	0.5	48.8	152.4	201.2	422.113	1.182	420.93	421.02	420.85
9	1486	4	103	20.23	68.8	5.4	0.5	22.0	74.7	96.7	279.043	0.707	278.34	278.46	278.22
10	1653	2	211	20.72	70.5	5.5	0.3	24.4	76.3	100.7	276.824	0.762	276.06	—	—
11	1487	2	211	20.72	70.5	5.5	0.3	24.4	76.3	100.7	409.932	1.015	408.92	—	—
12	4096	4	271	53.22	181.0	11.0	0.5	38.6	192.5	231.1	569.045	1.510	567.54	567.60	567.47

Note:
Cable length B corresponds to B-line, IHI drawing F-114 and represents the length of the stay cables on the east side of the bridge.

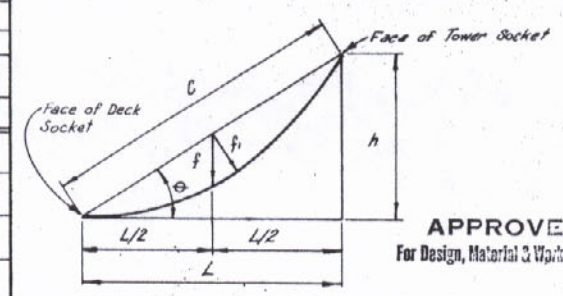

$$\text{Sag Length} = S = C\left[1 + \frac{1}{24}\left(\frac{WL^2}{TC}\right)^2\right]$$

$$\text{Fabricated Length} = F = S - \frac{TC}{AE}$$

W = weight per foot, kips per foot
T = cable tension, kips
A = cable area, sq. in.
E = 29,000 ksi
C = chord length deck socket to tower socket
L = (horizontal distance between W.P.s^2 + transverse distance between W.P.s^2)$^{1/2}$

APPROVED
For Design, Material & Workmanship
Frankland & Lienhard
By T.T. OCT 23 1980

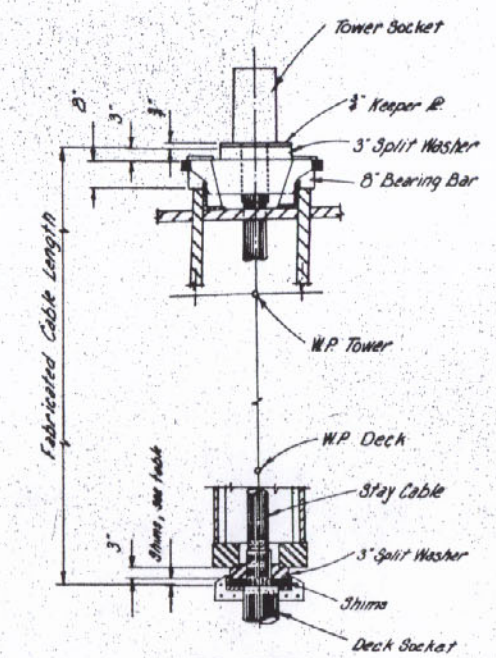

CABLE LENGTH DETAIL

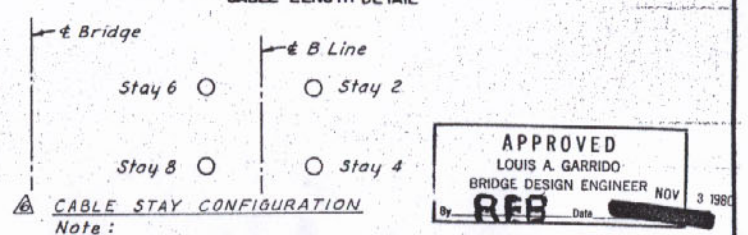

APPROVED
LOUIS A. GARRIDO
BRIDGE DESIGN ENGINEER
By RFB Date [redacted] NOV 3 1980

△6 CABLE STAY CONFIGURATION

Note:
1. See IHI Drawing F114.
2. Difference between as-built camber and dead load deflection, see F and L calculations.
3. See As-Built Tower Sheet S-4.
4. See Dead Load Camber Tower Contract Plan Sheets 12 and 12a.
5. See HNTB Plane Frame Analysis.
6. See Contract Plan Sheets 8-1 and 8-2.
7. See Contract Plan Sheet 16B and C does not include shim thickness.
8. See IHI Saddle Drawings S-32, S-34 and S-36.
9. (Long. Dist.^{2} + Trans. Dist.^{2})$^{1/2}$.
10. Information furnished by Prescon Corporation.
11. See formula for cable sag length.
12. Cable Sag Length — TC/AE.
△13. Fabricated Stay Length, see IHI Drawing S-32, S-34 and S-36
Cables 1 and 12 = Column 12 ± 0.067, Cables 4 and 9 = Column 12 ± 0.121
Cables 5 and 8 = Column 12 ± 0.086

STATE OF LOUISIANA — DANIEL J. WATKINS, REG NO 13134, REGISTERED PROFESSIONAL ENGINEER IN CIVIL ENGINEERING

Date	Description	by
△6 10-3-80	Adjust Cables 1,4,5,8,9 & 12	MDM
△5 8-20-80	Add Long. W.P. Defl.	MDM
△4 8-1-80	Delete Long. W.P. Defl	MDM
7-25-80	General	MDM
4-11-80	General	MGH
3-11-80	General	

Revisions

ERECTOR
THE MELBOURNE BROTHERS CONSTRUCTION CO.
P.O. Box 2251 North Canton, Ohio 44720 216-494-1833

Owner - State of Louisiana
General Contractor - Williams Brothers Construction Co., Inc.
Fabricator - Ishikawajima - Harima Heavy Industries Co., Ltd.

FABRICATED CABLE LENGTH - B

MISSISSIPPI RIVER BRIDGE (LULING)
MAINRIVER CROSSING SUPERSTRUCTURE
St. Charles Parish State Project No. 450-37-02

Date 1-3-80 | Scale None | Sheet No. EP 24-B
Made By RFF | Chkd by MDM | Apprvd by

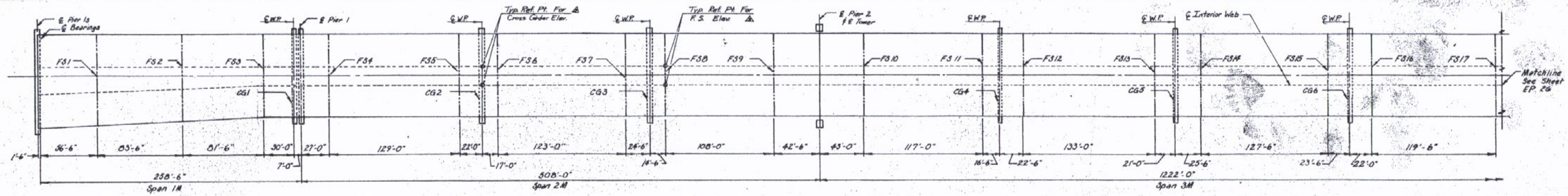

	ID 1	FS1	ID 2	ID 3	FS2	ID 4	ID 5	FS3	CG 1	FS4	FS5	CG 2	FS6	FS7	CG 3	FS8	FS9	FS10	FS11	CG 4	FS12	FS13	CG 5	FS14	FS15	CG 6	FS16
		145.31			148.49			151.59	152.74	154.06	158.85	159.61	160.18	164.03	164.73	165.13	167.90	169.72	171.94	172.20	172.55	174.21	174.42	174.64	175.42	175.50	175.55
P15 to FS2	144.40	144.47	146.23	148.01	148.72																						
Add Block 3	144.41	145.49	146.25	148.00	143.70	149.64	151.20	151.24																			
Add Block 4		145.29			148.42			151.53	152.72	154.13																	
Add Block 5		145.30			148.44			151.54	152.73	154.12	159.30																
Add Block 6		145.29			148.42			151.53	152.72	154.13	159.28	160.07	160.68														
Add Block 7		145.35			148.53			151.60	152.74	154.07	159.84	159.58	160.14	164.05													
Add Block 8,		145.36			148.54			151.60	152.74	154.06	158.84	159.59	160.16	164.01	164.70	165.11											
Add Block 9&10		145.36			148.58			151.62	152.74	154.04	158.82	159.40	159.95	163.72	164.34	164.73	167.73	170.01									
Add Block 11		145.35			148.54			151.60	152.74	154.06	158.84	159.60	160.17	164.06	164.70	165.10	168.07	169.70	171.40								
Add Stay P3-T11		145.36			148.54			151.60	152.74	154.06	158.84	159.59	160.17	164.05	164.66	165.06	167.97	169.96	172.81								
Add Block 12		145.35			148.54			151.60	152.74	154.06	158.84	159.58	160.14	164.09	164.74	165.15	168.08	169.76	171.77	172.01	172.34						
Add P4 Remove T11		145.35			148.54			151.60	152.74	154.06	158.84	159.59	160.15	164.08	164.71	165.11	168.02	169.88	172.53	172.77	173.23						
Add Block 13 Release FW3		145.36			148.55			151.61	152.74	154.06	158.85	159.63	160.21	164.31	164.97	165.38	168.16	169.71	171.38	171.53	171.73	172.29					
Add P2 & T13		145.35			148.53			151.59	152.74	154.07	158.84	159.56	160.11	163.86	164.53	164.94	167.96	169.92	172.54	172.89	173.37	178.03					
Add Block 14 Release FW2		145.28			148.40			151.51	152.72	154.14	159.38	160.19	160.79	164.67	165.25	165.62	168.19	169.69	171.41	171.58	171.78	172.39	172.57	172.45			
Add Stay P5 Remove T13		145.28			148.41			151.52	152.72	154.14	159.35	160.15	160.74	164.61	165.19	165.57	168.17	169.71	171.75	172.01	172.34	174.24	174.68	174.84			
Add Half P1 Block 15		145.35			148.53			151.59	152.74	154.07	159.93	159.69	160.24	164.12	164.74	165.14	168.03	169.86	172.23	172.52	172.88	174.61	174.94	174.99	175.37		
Add Half P1 T15		145.39			148.61			151.64	152.75	154.03	158.66	159.40	159.93	163.82	164.48	164.89	167.96	169.91	172.49	172.82	173.26	175.87	176.44	176.79	179.15		
Add Block 16		145.38			148.59			151.62	152.75	154.05	158.77	159.52	160.07	163.95	164.59	165.00	167.98	169.90	172.40	172.71	173.10	175.11	175.51	175.63	176.42	176.50	176.47
Add Stay P6		145.38			148.59			151.62	152.75	154.05	158.77	159.53	160.08	163.95	164.60	165.01	167.99	169.88	172.35	172.67	173.08	175.50	176.03	176.32	178.30	178.60	178.83
Add Block 17 Remove T15, T18		145.38			148.55			151.62	152.75	154.04	158.78	159.52	160.07	163.93	164.58	164.99	167.93	169.89	172.38	172.69	173.09	175.13	175.58	175.72	176.99	177.13	177.25
Add Curbs, Med. and Fra. Pc.		145.36			148.56			151.61	152.74	154.05	158.82	159.58	160.15	164.00	164.67	165.07	167.92	169.83	172.22	172.51	172.88	174.78	175.13	175.31	176.39	176.51	176.61
Add Wearing Surface		145.31			148.49			151.59	152.74	154.05	158.82	159.58	160.15	164.01	164.71	165.11	167.91	169.77	171.92	172.14	172.48	174.13	174.28	174.49	175.21	175.29	175.34
Add Cobb Grout and Handrail		145.30			148.49			151.58	152.74	154.05	158.84	159.60	160.16	164.02	164.72	165.12	167.90	169.76	171.91	172.12	172.46	174.08	174.21	174.46	175.16	175.22	175.27

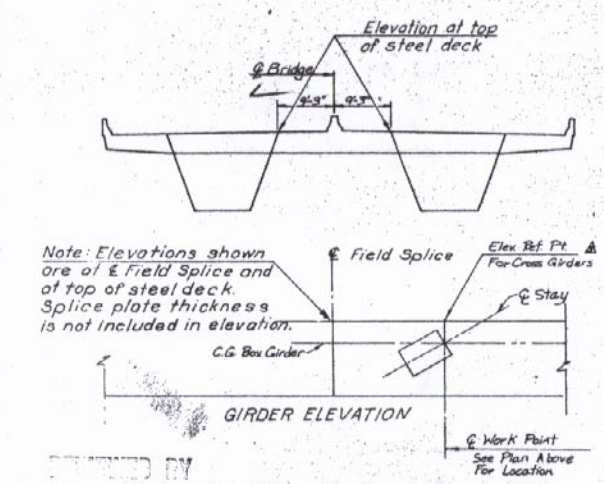

RECEIVED BY
DATE 10-10-80
BY E.S.

RECEIVED OCT 7 1980

Note: Elevations for FS1 - FS3 are for west girder only.

APPROVED
LOUIS A. GARRIDO
BRIDGE DESIGN ENGINEER
By RFB Date SEP 14 1980

STATE OF LOUISIANA
DANIEL J. WATKINS
REG NO 13134
REGISTERED PROFESSIONAL ENGINEER IN CIVIL ENGINEERING

ERECTOR
THE MELBOURNE BROTHERS CONSTRUCTION CO.
P.O. Box 2251 North Canton, Ohio 44720 216-494-1833

Owner - State of Louisiana
General Contractor - Williams Brothers Construction Co., Inc.
Fabricator - Ishikawajima - Harima Heavy Industries Co., Ltd.

ELEVATIONS

MISSISSIPPI RIVER BRIDGE (LULING)
MAINRIVER CROSSING SUPERSTRUCTURE
St. Charles Parish State Project No. 450-37-02

Date	Description	by
9-29-80	Reference elev Location Δ	MDM
8-14-80	General	MDM
3-11-80	General	

Revisions

Date	Scale	Sheet No. EP25
Made By	Chkd by	Apprvd by

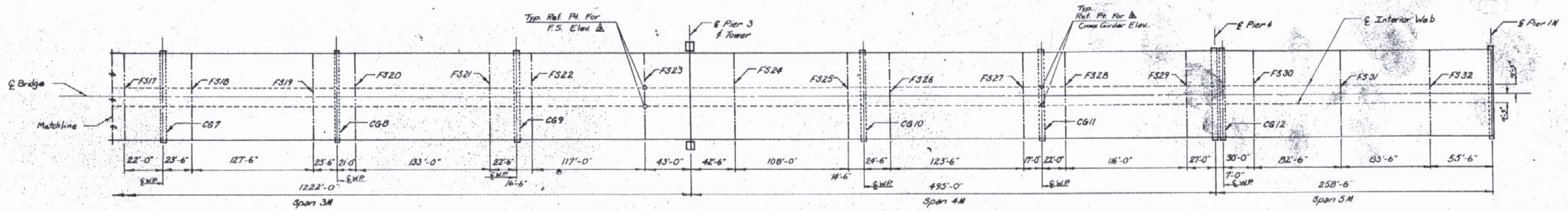

	FS17	CG 7	FS18	FS19	CG 8	FS20	FS21	CG 9	FS22	FS23	FS24	FS25	CG 10	FS26	FS27	CG 11	FS28	FS29	CG 12	FS30	FS31	FS32
Top of Deck Elevation	175.55	175.49	175.41	174.64	174.41	174.21	172.54	172.20	171.94	169.78	167.89	165.13	164.72	164.03	160.17	159.60	158.84	154.56	153.21	152.07	148.75	145.41
Pier 1N to FS29																						
Add Block 29																	158.43	154.50	153.19	152.08	148.90	145.51
Add Block 24 Stays T23-T24										169.86	167.90											
Add Blocks 23-25 Stays T22-T25									172.18	169.89	167.77	165.14										
Add Blocks 22 and 26							171.96	171.72	171.54	169.80	167.75	164.32	163.82	162.99								
Add Stays P9-P10 Remove T22-T25							172.36	172.00	171.74	169.68	168.06	165.97	165.68	165.21								
Add Blocks 21, 27 and 28						172.95	172.09	171.86	171.68	169.78	167.92	165.10	164.67	163.93	159.84	159.27	158.52	154.52	153.19	152.07	148.87	145.58
Add Stay P11, T20 Deck PC 27, 28						176.27	173.50	173.03	172.67	169.96	167.94	164.62	164.17	163.43	159.58	159.07	158.28	154.50	153.19	152.09	148.90	145.51
Add Half Stay P11 and Block 20				173.51	173.37	173.26	172.24	171.98	171.77	169.78	168.14	165.30	164.90	164.24	160.45	159.90	159.06	154.63	153.16	151.95	148.66	145.38
Add Stay P8 Remove T-20				175.66	175.24	174.90	172.71	172.33	171.84	169.77	168.13	165.27	164.87	164.21	160.42	159.86	159.03	154.63	153.17	151.96	148.67	145.39
Add Stay P12, T18 and Block 19			178.65	176.32	175.83	175.42	173.00	172.58	172.28	169.86	168.05	164.92	164.60	163.91	160.13	159.54	158.66	154.58	153.18	152.01	148.76	145.43
Add Block 18	174.89	174.98	175.00	174.50	174.28	174.09	172.47	172.16	171.91	169.77	168.15	165.26	164.97	163.74	160.53	159.97	159.12	154.64	153.16	151.95	148.66	145.38
Add Stay P7 half P12	178.97	178.77	178.47	176.42	175.96	175.58	173.13	172.74	172.42	169.90	168.01	164.80	164.47	163.78	159.99	159.46	158.67	154.56	153.18	152.03	148.80	145.46
Add Block 17 Adjust P12	177.88	177.76	177.58	176.01	175.61	175.28	173.03	172.65	172.34	169.88	168.03	164.81	164.55	163.86	160.08	159.54	158.74	154.57	153.18	152.02	148.79	145.45
Adjust P1 & P12 Remove T15 & T16	177.32	177.21	177.10	175.94	175.61	175.33	173.20	172.81	172.49	169.88	167.92	164.79	164.44	163.74	159.95	159.42	158.64	154.55	153.19	152.01	148.83	145.47
Add Curbs, Med. and Fairing Pc.	176.64	176.56	176.46	175.44	175.15	174.91	172.94	172.60	172.29	169.84	167.89	164.93	164.51	163.88	160.06	159.51	158.74	154.55	153.20	152.03	148.81	145.46
Add Wearing Surface	175.35	175.31	175.23	174.51	174.29	174.11	172.49	172.20	171.95	169.78	167.88	165.04	164.65	163.96	160.11	159.55	158.78	154.56	153.21	152.02	148.75	145.41
Add Cable Grout, Handrail	175.27	175.22	175.15	174.43	174.22	174.04	172.44	172.12	171.90	169.77	167.89	165.12	164.71	164.02	160.16	159.59	158.83	154.56	153.21	152.02	148.75	145.41

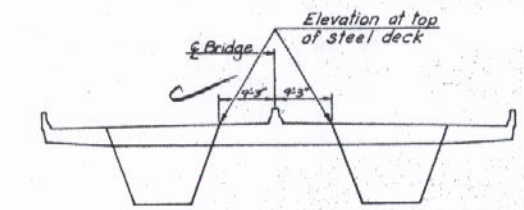

Note: Elevations shown are at ℄ Field Splice and at top of steel deck. Splice plate thickness is not included in elevation.

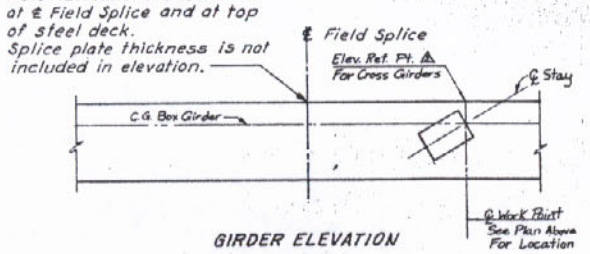

GIRDER ELEVATION

RECEIVED BY
10-10-80
BY E.S.

RECEIVED OCT 7 1980

APPROVED
LOUIS A. GARRIDO
BRIDGE DESIGN ENGINEER
By REB Date SEP 14 1980

STATE OF LOUISIANA
DANIEL J. WATKINS
REG NO 13134
REGISTERED PROFESSIONAL ENGINEER IN CIVIL ENGINEERING

ERECTOR
THE MELBOURNE BROTHERS CONSTRUCTION CO.
P.O. Box 2251 North Canton, Ohio 44720 216-494-1833

Owner - State of Louisiana
General Contractor - Williams Brothers Construction Co., Inc.
Fabricator - Ishikawajima - Harima Heavy Industries Co., Ltd.

ELEVATIONS

MISSISSIPPI RIVER BRIDGE (LULING)
MAINRIVER CROSSING SUPERSTRUCTURE
St. Charles Parish State Project No. 450-37-02

Date	Description	by
9-23-80	Reference Elev. Location Δ	ELK
8-14-80	General	
3-11-80	General	

Revisions

Date	Scale	Sheet No. EP26
Made By	Chkd by	Apprvd by

MATERIAL SPECIFICATIONS

1. STEEL STRAND FOR THE TEMPORARY CABLE STAYS SHALL CONFORM TO ASTM-A416-74 FOR .6" DIAMETER 270 KSI, LOW RELAXATION STRAND WITH A GUARANTEED ULTIMATE TENSILE STRENGH OF 58.6K/STRAND.
2. STEEL FOR STRESSTEK BARREL ANCHORAGES AND WEDGES SHALL BE 1045/50 AND 86L20 RESPECTIVELY.
3. ROUNDS FOR THE TOWER TOP ANCHOR PINS AND FOR THE QUICK CONNECT ANCHOR PINS SHALL BE ASTM A-668, CLASS F, G OR EQUAL. TOWER TOP CRADLES SHALL BE ASTM A-36 AND QUICK CONNECTS SHALL B ASTM A-588

ALLOWABLE STRESSES

1. STEEL FOR STRANDS.
   DUE TO THE ALL SERVICE LOADS: $.5f'_s$ = 135KSI OR 29,300 lbs (PER H.N.T.B. DESIGN).
   DUE TO STRESS INCREASES DURING DETENSIONING: $.8f'_s$ = 216KSI OR 46,880 lbs (PER ACI 318-74)
2. STEEL FOR ANCHOR PINS - f_y = 50,000 PSI
   BEARING: 30,000 PSI = $.60f_y$
   SHEAR: 20,000 PSI = $.40f_y$
   BENDING: 33,000 PSI = $.66f_y$
3. STEEL FOR TOWER TOP CRADLES AND QUICK-CONNECTS - f_y = 36,000 PSI
   BEARING: 22,000 PSI = $.60f_y$
   SHEAR: 14,500 PSI = $.40f_y$
   BENDING: 24,000 PSI = $.66f_y$

FABRICATION OF TEMPORARY STAYS

1. TEMPORARY STAYS SHALL BE CUT TO LENGTH ON THE JOBSITE. EACH TEMPORARY STAY SHALL BE FABRICATED FULL LENGTH FROM NEW STRAND. NO ATTEMPT SHALL BE MADE TO SPLICE SHORTER STAYS USED IN INITIAL STAGES TO FORM LONGER STAYS USED IN THE FINAL STAGES OF CONSTRUCTION. LIKEWISE NO ATTEMPT SHALL BE MADE TO CUT STAYS FOR THE LONGEST REQUIREMENTS AND USE THEM INITIALLY FOR THE SHORTER STAYS BY POSITIONING ONE OR THE OTHER OF THE ANCHOR PINS AT INTERMEDIATE POSITIONS ALONG THE LENGTH TO FORM THE SHORTER STAYS.
2. ANCHORAGES FOR THE TEMPORARY STAYS AT THE TOWER TOP AND AT THE GIRDER ELEVATION ARE SHOWN ON STRESSTEK DRAWINGS AND ON HNTB DRAWINGS EP-18 THRU 21. REQUIRED NUMBER OF STRANDS PER STAY IS SHOWN ON STRESSTEK DWGS.
3. STRANDS WILL BE INSERTED THROUGH THE HOLES IN THE QUICK CONNECT PINS AND STRESSTEK BARREL ANCHORAGES FIXED ON THE ENDS OF EACH STRAND. THE STRAND WILL BE STRETCHED OUT AND CUT TO LENGTH. EACH STRAND WILL BE CUT WITH 15' TO 30' EXTRA LENGTH TO FACILITATE INSTALLATION OF THE ASSEMBLED TENDON.
4. WHEN ALL STRANDS REQUIRED ARE INSTALLED IN THE QUICK-CONNECT PIN AT THE DECK LEVEL, THE TOWER-TOP PIN WILL BE INSTALLED AT THE OPPOSITE END AND STRESSTEK BARREL ANCHORAGES FIXED ON THE ENDS OF EACH STRAND.
5. A STRAIGHT LINE WILL BE PAINTED ACROSS ALL STRANDS AT A POINT CALCULATED TO PROVIDE A VISIBLE REFERENCE UPON COMPLETION OF STRESSING.

INSTALLATION OF TEMPORARY STAYS

1. USING A SERVICE CRANE ON TOP OF THE TOWER, HOIST THE TOWER-TOP PIN AND STRANDS TO THE CRADLES. SET THE LOWERMOST PIN FIRST AND STACK THE UPPER PINS SUBSEQUENTLY. DURING THIS OPERATION, LAY THE UPPER CRADLE PINS AND STRANDS OFF TO EITHER SIDE OF THOSE WHICH ARE LOWER TO AVOID TANGLING AS THE LOWERMOST PINS ARE SET. TAG LINES MAY BE REQUIRED TO AVOID HAVING TO UNTWIST A STRAND GROUP ONCE THE PIN HAS BEEN RAISED TO THE CRADLE ELEVATION. STACK PINS AND STRAND UNTIL THE PROPER NUMBER OF STRANDS ARE INSTALLED AT BOTH OF THE WEBS ON A GIVEN GIRDER. FOR STRANDS ANCHORED AT TOE OF THE TEMPORARY SADDLE, SEE NOTE 2. OF ADDENDUM.
2. WHEN TEMPORARY STAYS HAVE BEEN INSTALLED FOR BOTH WEBS OF A GIVEN BOX GIRDER, REMOVE SLACK FROM EACH STRAND WITH HAND RIGGING. A CABLE PULLER WITH 3/8" GRIPPERS WILL WORK ON .6" POST-TENSIONING STRAND. CARE MUST BE TAKEN THAT THE STRESSTEK BARREL ANCHORAGE IS MAINTAINED IN POSITION AT THE CRADLE PIN DURING THE REMOVAL OF SLACK WITH HAND RIGGING. IN THE EVENT OF SLIPPAGE IN THE JAWS OF THE CABLE PULLER, THE BARREL ANCHORAGE WILL CATCH THE STRAND AND PREVENT IT FROM FALLING.
3. SNUG UP ALL STRANDS UNTIL SLACK IS REMOVED AND STRANDS ARE VISIBLY FREE OF TWISTS AND HAVE THE SAME DRAPE. CHECK TO SEE THAT PAINT MARKS ON THE STRAND ARE IN APPROXIMATE ALIGNMENT.

STRESSING OF TEMPORARY STAYS

1. TENSIONING OF STRANDS SHALL BEGIN WITH THE UPPERMOST PIN IN ORDER THAT THE STRANDS FOR EACH PIN WILL BE LIFTED ABOVE THOSE BELOW AS REMAINING SLACK IS REMOVED AND TENSION IS APPLIED.
2. TENSIONING OF STRANDS ON EACH SUCCESSIVE PIN SHALL BEGIN WITH THE CENTER STRAND AND THEN ALTERNATE FROM ONE SIDE TO THE OTHER OF CENTER FOLLOWING THE SEQUENCE NUMBERS PAINTED ON THE PIN.
3. INITIAL JACKING (AMOUNT TO CORRECT CANTILEVERED DEFLECTION) WILL BE PERFORMED SIMULTANEOUSLY AND SYMMETRICALLY ON TWO WEBS IF APPLIED TO A SINGLE GIRDER ERECTED OR FOUR WEBS IF APPLIED TO TWO BOX GIRDERS ERECTED WITH DIAPHRAGMS IN PLACE. SEE NOTE 1. OF ADDENDUM AT RIGHT FOR FINAL STRESSING.
4. SINCE THE JACKING OF EACH STRAND IN SEQUENCE REDUCES THE STRESS ON ALL STRANDS JACKED PREVIOUSLY, THERE IS NO DANGER OF OVERSTRESSING SO LONG AS NO INDIVIDUAL STRAND IS STRESSED PAST .5f'_s OR 135KSI. THIS STRESS LEVEL IS EQUIVALENT TO A FORCE OF 29.3 KIPS/STRAND AND IS THE ALLOWABLE ESTABLISHED BY HNTB.
5. THE REQUIRED LOADS FOR TEMPORARY STAYS ARE TABULATED ON HNTB SHEET EP 23. THE LOADS SHOWN ON EP 23 FOR STAGES 7S THRU 14S AND STAGES 4N THRU 10N ARE THE TOTAL LOAD PER BOX GIRDER AND REPRESENT THE STAY LOAD AT TWO GIRDER WEBS.
6. THERE ARE ELEVEN LOCATIONS WHERE FOUR TEMPORARY STAYS ARE REQUIRED FOR A TOTAL OF FORTY-FOUR TENDONS. STRESSING DATA, AND INFORMATION FROM HNTB SHEET EP 23, ARE TABULATED UNDER STRESSING DATA FOR TEMPORAY STAYS.
7. OBTAINING THE PROPER FORCE ON EACH OF THE STRANDS OF EACH OF THE FOUR TENDONS COMPOSING A GIVEN TEMPORARY STAY SHALL BE EFFECTED BY STRESSING EACH STRAND TO A SPECIFIED FORCE. IF THE PAINT MARK DATUM ON THE STRANDS INDICATES A SIGNIFICANT LOSS OF STRESS DUE TO ELASTIC SHORTENING, RESTRESS STRANDS IN THE SAME SEQUENCE TO THE SPECIFIED FORCE.
8. MONITOR THE DECK ELEVATION AT THE TRANSVERSE SPLICE DURING TENSIONING OF THE STRAND.

DETENSIONING OF TEMPORARY STAYS

1. DETENSIONING OF STRANDS SHALL PROCEED IN THE REVERSE ORDER OF THE SEQUENCE FOR STRESSING, ALTERNATING FROM THE OUTSIDE AND RELEASING THE CENTER STRAND LAST.
2. AN IMPORTANT DIFFERENCE EXISTS BETWEEN DETENSIONING AND TENSIONING FOUR TENDONS OF A TEMPORARY STAY: AS EACH SUCCESSIVE STRAND IS DETENSIONED, THE STRESS INCREASES RATHER THAN DECREASES ON THOSE STRANDS REMAINING TO BE DETENSIONED. THE POTENTIAL EXISTS, THEREFORE TO INCREASE THE STRESS IN THE LAST STRANDS TO BE DETENSIONED TO A LEVEL ABOVE .8f'_s. THIS SITUATION MAY EASILY BE REMEDIED BY DETENSIONING EACH STRAND IN TWO OR MORE STEPS IF REQUIRED. SINCE THE PERMANENT STAYS WILL HAVE REMOVED MOST OF THE LOAD ON THE TEMORARY STAYS AND SINCE THE TEMPORARY STAYS WILL HAVE BEEN DESIGNED TO BE AT A MAXIMUM STRESS OF .5f'_s UNDER SERVICE LOADS, THERE IS LITTLE PROBABILITY THAT SEVERAL STEPS WILL BE REQUIRED IN DETENSIONING.
3. WHEN DETENSIONING HAS PROCEEDED TO THE POINT WHERE SLACK EXISTS IN ALL THE STRANDS IN A PIN, PICK UP THE PIN AND STRAND WITH THE TOWER-TOP SERVICE CRANE AND LOWER TENDON TO THE DECK.
4. WHILE DETENSIONING AND REMOVING A PIN AND STRANDS, PLACE A SECOND ANCHORAGE ON THE END OF EACH STRAND AS A SAFETY MEASURE AGAINST DROPPING A STRAND.

STRESSING DATA FOR TEMPORARY STAYS

1.

	SLACK LENGTH (FT)	STRESSING LENGTH (FT)	MIN. NUMBER OF STRANDS/TENDON	NUMBER OF TENDONS/STAY	REQUIRED JACK FORCE/TENDON	REQUIRED JACK FORCE/STRAND
T9	263	237.44	4	4	17.75	4.438
T10	263	237.44	8	4	18.95	2.369
T11	305	279.55	14	4	226.40	16.171
T13	424	398.29	28	4	238.45	8.516
T15	579	548.22	28	4	430.40	15.371
T18	579	548.22	28	4	386.40	13.800
T20	424	398.29	28	4	228.55	8.163
T22	305	279.55	14	4	73.45	5.246
T23	263	237.44	4	4	12.00	3.000
T24	263	237.44	4	4	10.60	2.650
T25	305	279.55	14	4	56.25	4.018

2. IT SHOULD BE NOTED THAT ELONGATION IS USED AS A CHECK OF THE APPLIED LOAD. HOWEVER, SINCE BOTH PIN ANCHORAGE ARE MOVING TOWARD ONE ANOTHER DURING STRESSING AND JACK PISTON EXTENSION IS DUE BOTH TO ELONGATION OF THE STRAND AND TO BENDING OF THE TOWER AND GIRDERS, IT IS NOT A CONVENIENT MEASURE OF THE FORCE. THEREFORE, THE HYDRAULIC GUAGE PRESSURE SHALL BE USED AS THE PRIMARY MEASURE OF THE FORCE ON A STRAND. THE RELATIVE POSITION OF A DATUM PAINT MARK ON A STRAND SHALL BE USED AS A CONTINUING VISIBLE INDICATION OF DIFFERENCES IN STRESS BETWEEN STRANDS WITHOUT BEING USED AS A MEASURE OF THE MAGNITUDE OF THESE DIFFERENCES.

ADDENDUM TO NOTES

1. FINAL JACKING WILL BE PERFORMED SIMULTANEOUSLY AND SYMMETRICALLY ON FOUR WEBS. SIMULTANEOUS AND SYMMETRICAL JACKING SHALL BE DEFINED AS A PROCESS BY WHICH THE LOAD APPLIED TO ANY WEB WILL BE WITHIN 20% OF OTHER WEB LOADS BEING JACKED. FINAL JACK LOADS FOR EACH OF THE FOUR TENDONS AT A GIVEN LOCATION WILL BE EQUAL.
2. STRANDS ANCHORED AT THE TOE OF THE TEMPORARY SADDLE WILL BE PLACED INDIVIDUALLY WITH THE DECK END ANCHORED FIRST. THE TOWER END WILL THEN BE RAISED AND ANCHORED USING THE ADVANTAGE OF THE SLACK LENGTH FOR INSTALLATION. THE JACKING LOAD WILL BE APPLIED SIMULTANEOUSLY AND SYMMETRICALLY.

APPROVED
For Design, Materials & Workmanship
Frank L. Lienhard
By T.T. 10-10-80

RECEIVED OCT 7 1980

APPROVED
LOUIS A. GARRIDO
BRIDGE DESIGN ENGINEER
By REB Date SEP 14 1980

REV 9	CHANGED TITLE BLOCK	REV 5	REMOVED ELONGATION S	REV. 1	CHANGED NOTE ON STRESSES
		REV 6	ADDED TO NOTE 1, INSTALLATION	REV 2	CHANGED PAINT MARK TO PAINT
		REV 7	ADDED TO NOTE 3, STRESSING	REV 3	CHANGED CRADLES FROM A-588 TO A36
		REV 8	ADDED ADDENDUM TO NOTES	REV 4	CHANGED LOAD UNDER STRESS DATA

STRESSTEK CORPORATION
LOS GATOS, CALIF. OXON HILL, MD. LOS ANGELES, CALI

DATE 1 MAY 79
DRAWN WBD
JOB NO.

LOUISIANA DOT PROJECT # 450-37-02
SAINT CHARLES PARISH, LULING, LA.

NOTES FOR TEMPORARY CABLE STAYS

SCALE: N/A
SHEET NO. 1

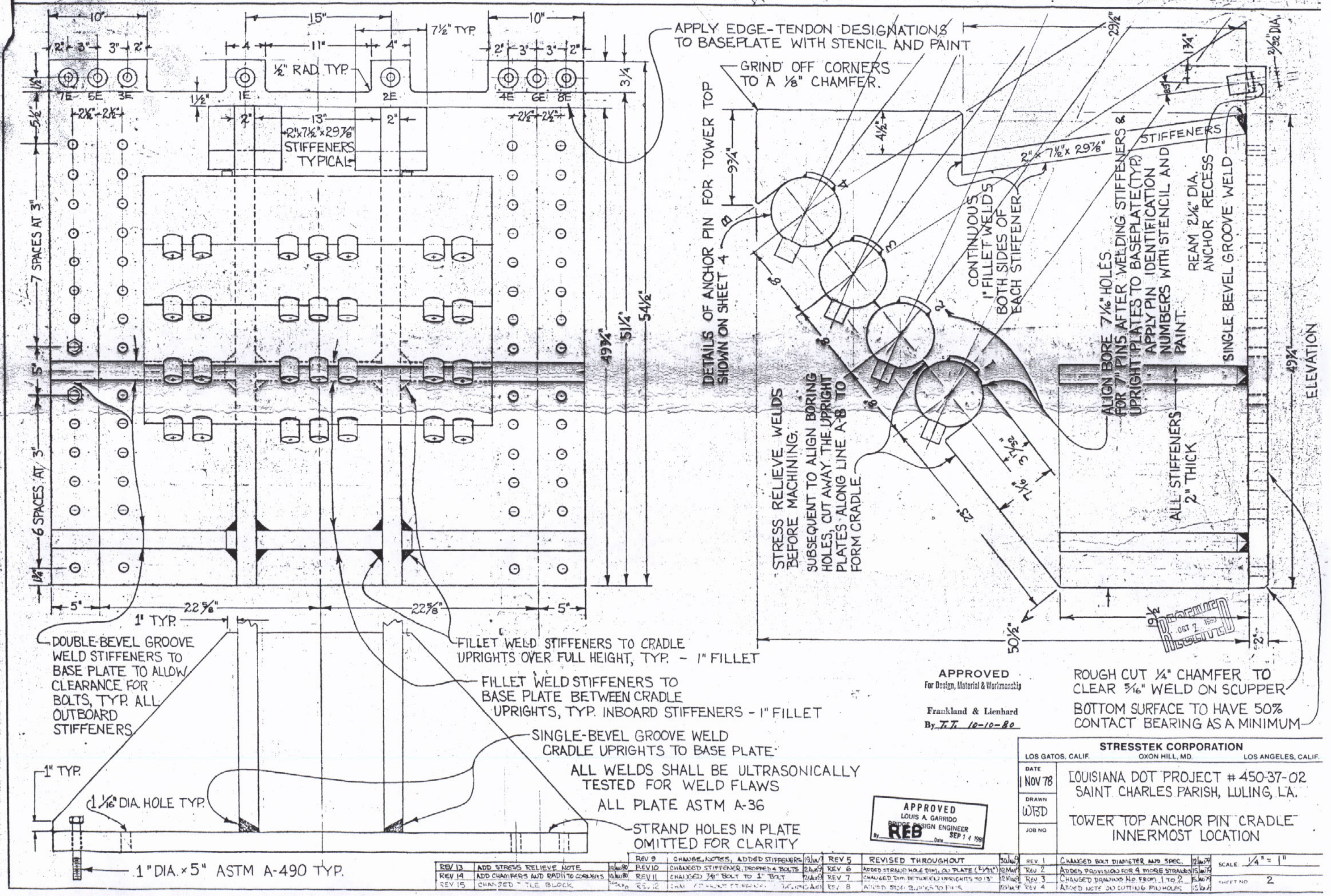
APPLY EDGE-TENDON DESIGNATIONS TO BASEPLATE WITH STENCIL AND PAINT
GRIND OFF CORNERS TO A 1/8" CHAMFER.
1/2" RAD. TYP.
7 1/2" TYP.
2"x7 1/2"x29 7/8" STIFFENERS TYPICAL
7 SPACES AT 3"
6 SPACES AT 3"
DETAILS OF ANCHOR PIN FOR TOWER TOP SHOWN ON SHEET 4
STRESS RELIEVE WELDS BEFORE MACHINING.
SUBSEQUENT TO ALIGN BORING HOLES, CUT AWAY THE UPRIGHT PLATES ALONG LINE A-B TO FORM CRADLE
CONTINUOUS 1" FILLET WELDS BOTH SIDES OF EACH STIFFENER
STIFFENERS
2"x7 1/2"x29 7/8"
ALIGN BORE 7 1/16" HOLES FOR 7" PINS AFTER WELDING STIFFENERS & UPRIGHT PLATES TO BASEPLATE (TYP.)
APPLY PIN IDENTIFICATION NUMBERS WITH STENCIL AND PAINT.
REAM 2 1/16" DIA. ANCHOR RECESS
SINGLE BEVEL GROOVE WELD
ALL STIFFENERS 2" THICK
ELEVATION
DOUBLE-BEVEL GROOVE WELD STIFFENERS TO BASE PLATE TO ALLOW CLEARANCE FOR BOLTS, TYP. ALL OUTBOARD STIFFENERS
FILLET WELD STIFFENERS TO CRADLE UPRIGHTS OVER FULL HEIGHT, TYP. - 1" FILLET
FILLET WELD STIFFENERS TO BASE PLATE BETWEEN CRADLE UPRIGHTS, TYP. INBOARD STIFFENERS - 1" FILLET
SINGLE-BEVEL GROOVE WELD CRADLE UPRIGHTS TO BASE PLATE
ALL WELDS SHALL BE ULTRASONICALLY TESTED FOR WELD FLAWS
ALL PLATE ASTM A-36
STRAND HOLES IN PLATE OMITTED FOR CLARITY
1 1/16" DIA. HOLE TYP.
1" DIA. x 5" ASTM A-490 TYP.
ROUGH CUT 1/4" CHAMFER TO CLEAR 5/16" WELD ON SCUPPER
BOTTOM SURFACE TO HAVE 50% CONTACT BEARING AS A MINIMUM
APPROVED For Design, Material & Workmanship
Frankland & Lienhard
By T.T. 10-10-80
APPROVED LOUIS A. GARRIDO BRIDGE DESIGN ENGINEER By REB Date SEP 1 4 1981
STRESSTEK CORPORATION
LOS GATOS, CALIF. OXON HILL, MD. LOS ANGELES, CALIF.
DATE 1 NOV 78
DRAWN WTSD
JOB NO
LOUISIANA DOT PROJECT # 450-37-02
SAINT CHARLES PARISH, LULING, LA.
TOWER TOP ANCHOR PIN CRADLE INNERMOST LOCATION
SCALE 1/4" = 1"
SHEET NO 2
REV 13 ADD STRESS RELIEVE NOTE
REV 14 ADD CHAMFERS AND RADII TO CORNERS
REV 15 CHANGED TILE BLOCK
REV 9 CHANGE NOTES, ADDED STIFFENERS
REV 10 CHANGED STIFFENER, DROPPED 4 BOLTS
REV 11 CHANGED 7/8" BOLT TO 1" BOLT
REV 12 CHANGED STIFFENER
REV 5 REVISED THROUGHOUT
REV 6 ADDED STRAND HOLE DIM., DO PLATE (2 1/32")
REV 7 CHANGED DIM. BETWEEN UPRIGHTS TO 13"
REV 8 ADDED STRAND BUSHINGS TO PLATE
REV 1 CHANGED BOLT DIAMETER AND SPEC.
REV 2 ADDED PROVISION FOR 4 MORE STRANDS
REV 3 CHANGED DRAWING NO. FROM 1 TO 2
REV 4 ADDED NOTE DO CUTTING PIN HOLES

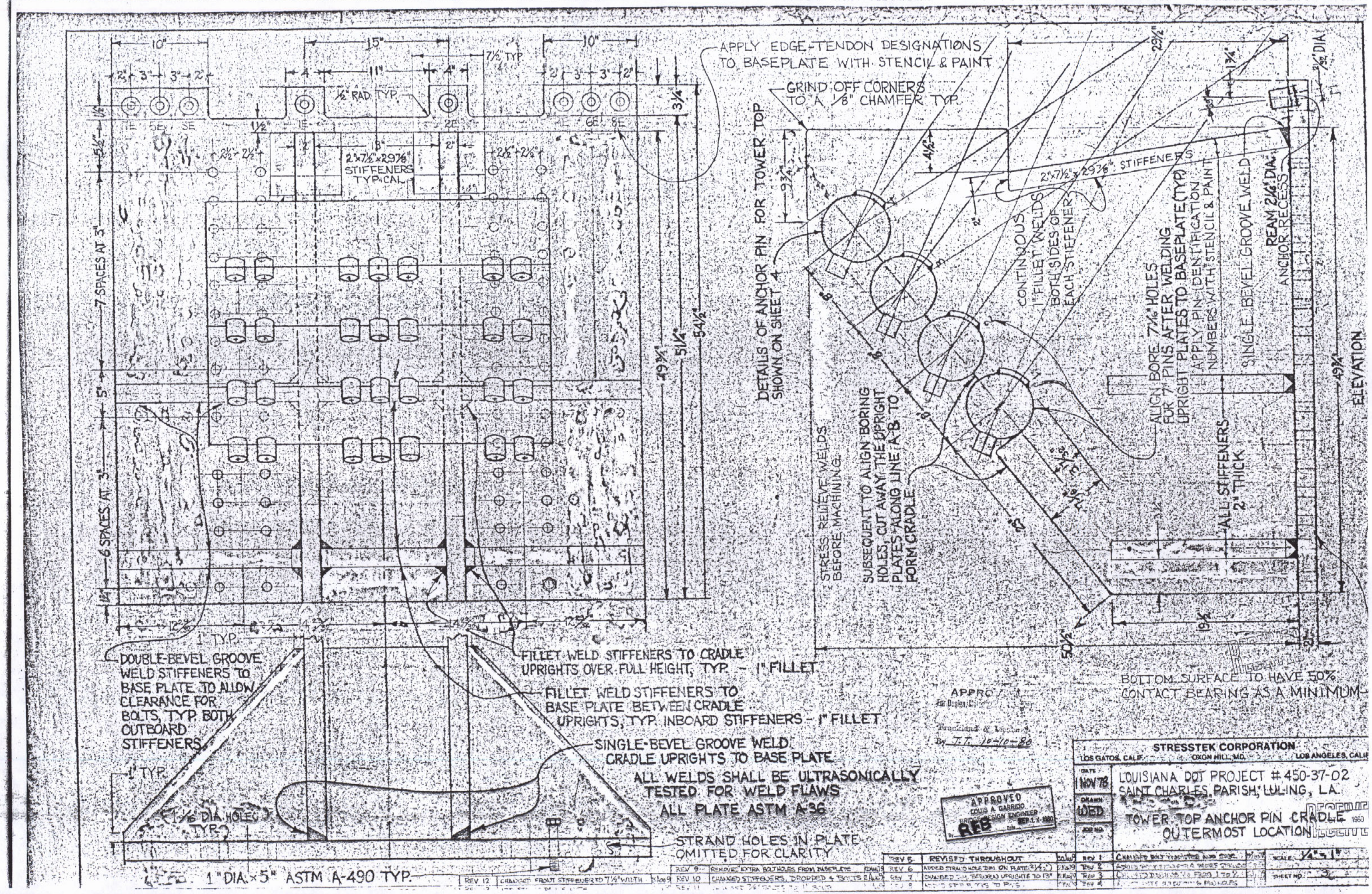
APPLY EDGE-TENDON DESIGNATIONS TO BASEPLATE WITH STENCIL & PAINT
GRIND OFF CORNERS TO A 1/8" CHAMFER TYP.
1/2" RAD. TYP.
2"x7 1/2"x29 7/8" STIFFENERS TYPICAL
7 SPACES AT 3"
6 SPACES AT 3"
DETAILS OF ANCHOR PIN FOR TOWER TOP SHOWN ON SHEET 4
STRESS RELIEVE WELDS BEFORE MACHINING
SUBSEQUENT TO ALIGN BORING HOLES, CUT AWAY THE UPRIGHT PLATES ALONG LINE A-B TO FORM CRADLE
CONTINUOUS 1" FILLET WELDS BOTH SIDES OF EACH STIFFENER
2"x7 1/2"x29 7/8" STIFFENERS
ALIGN BORE 7 1/16" HOLES FOR 7" PINS AFTER WELDING UPRIGHT PLATES TO BASEPLATE (TYP)
APPLY PIN IDENTIFICATION NUMBERS WITH STENCIL & PAINT
SINGLE BEVEL GROOVE WELD
REAM 2 1/16" DIA. ANCHOR RECESS
ALL STIFFENERS 2" THICK
ELEVATION
BOTTOM SURFACE TO HAVE 50% CONTACT BEARING AS A MINIMUM
DOUBLE-BEVEL GROOVE WELD STIFFENERS TO BASE PLATE TO ALLOW CLEARANCE FOR BOLTS, TYP. BOTH OUTBOARD STIFFENERS
FILLET WELD STIFFENERS TO CRADLE UPRIGHTS OVER FULL HEIGHT, TYP. - 1" FILLET
FILLET WELD STIFFENERS TO BASE PLATE BETWEEN CRADLE UPRIGHTS, TYP. INBOARD STIFFENERS - 1" FILLET
SINGLE-BEVEL GROOVE WELD CRADLE UPRIGHTS TO BASE PLATE
ALL WELDS SHALL BE ULTRASONICALLY TESTED FOR WELD FLAWS
ALL PLATE ASTM A-36
STRAND HOLES IN PLATE OMITTED FOR CLARITY
1 1/16" DIA. HOLES TYP.
1" DIA. x 5" ASTM A-490 TYP.
APPROVED
LOUIS A. GARRIDO
BRIDGE DESIGN ENGINEER
SEP 1 1980
STRESSTEK CORPORATION
LOS GATOS, CALIF. OXON HILL, MD. LOS ANGELES, CALIF.
DATE NOV 78
DRAWN WED
JOB NO.
LOUISIANA DOT PROJECT # 450-37-02
SAINT CHARLES PARISH, LULING, LA.
TOWER TOP ANCHOR PIN CRADLE
OUTERMOST LOCATION
SCALE 1/4" = 1'
SHEET NO. 3
REV 5 REVISED THROUGHOUT
REV 6 ADDED STRAND HOLE DIM. ON PLATE
REV 7 CHANGED THE BETWEEN UPRIGHTS TO 13"
REV 9 REMOVED EXTRA BOLTHOLES FROM INSERTS
REV 10 CHANGED STIFFENERS, DROPPED 4 BOLTS
REV 12 CHANGED FRONT STIFFENER TO 7 1/2" WIDTH

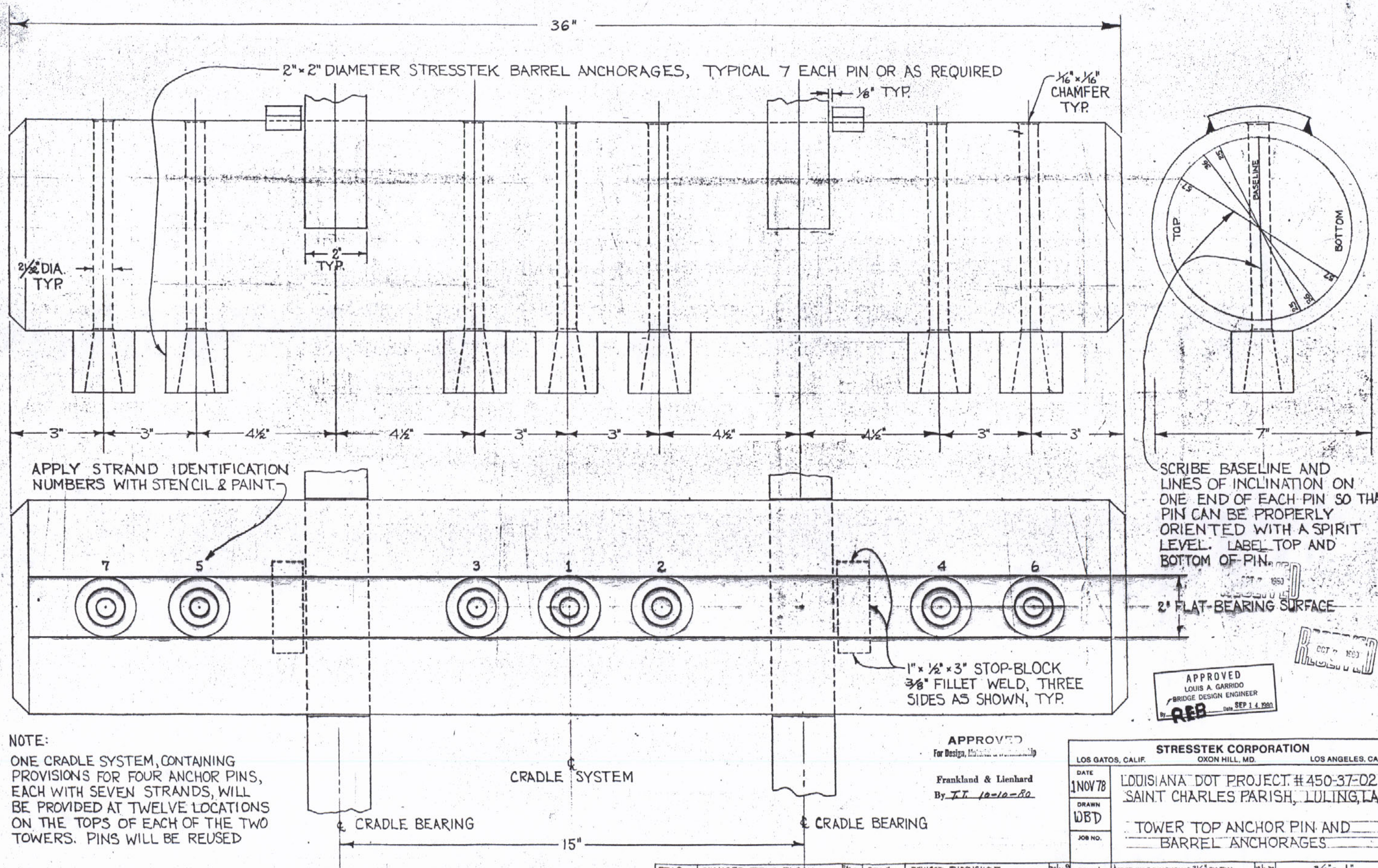

NOTE:

ONE CRADLE SYSTEM, CONTAINING PROVISIONS FOR FOUR ANCHOR PINS, EACH WITH SEVEN STRANDS, WILL BE PROVIDED AT TWELVE LOCATIONS ON THE TOPS OF EACH OF THE TWO TOWERS. PINS WILL BE REUSED

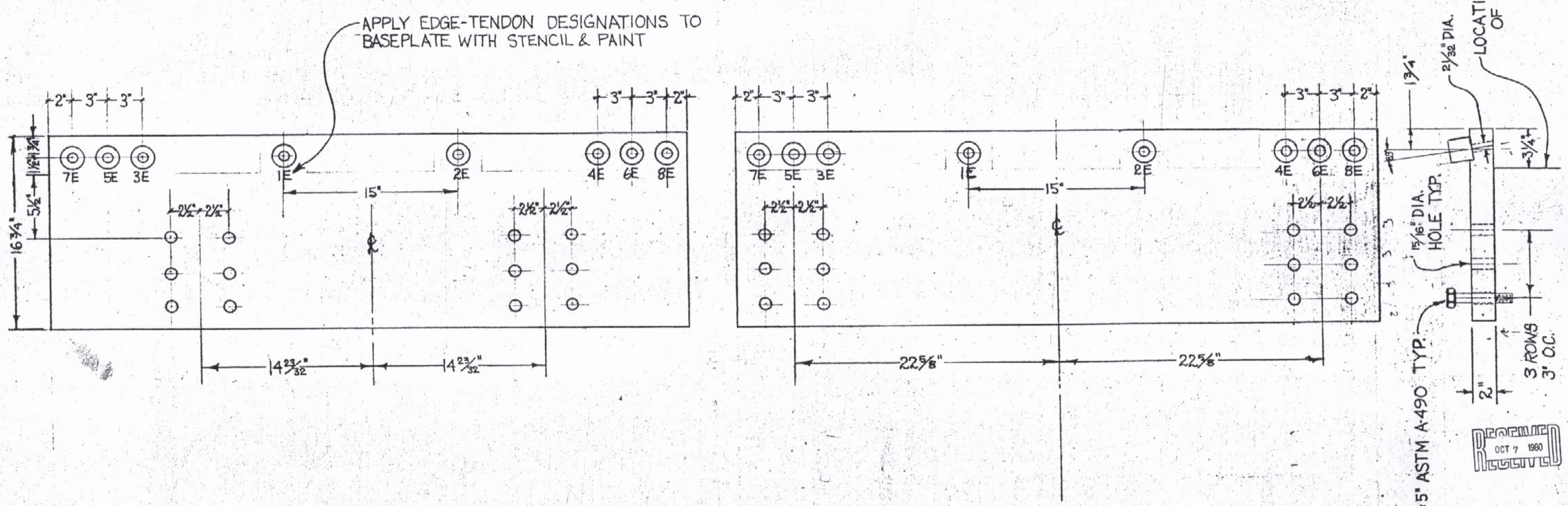

CRADLE FOR OUTERMOST LOCATION

CRADLE FOR INNERMOST LOCATION

NOTE: ALL PLATE ASTM A-36

APPROVED
For Design, Material & Workmanship
Frankland & Lienhard
By T.T. 10-10-80

RECEIVED
OCT 7 1980

APPROVED
LOUIS A. GARRIDO
PRINC. DESIGN ENGINEER
By REB Date SEP 1 4 1980

STRESSTEK CORPORATION
LOS GATOS, CALIF. OXON HILL, MD. LOS ANGELES, CALIF.

DATE 15 JAN 79	LOUISIANA DOT PROJECT #450-37-02 SAINT CHARLES PARISH, LULING, LA.
DRAWN W.B.D.	TOWER TOP CRADLES FOR SOUTH SIDE OF TOWER #2
JOB NO.	

REV. 1	REVISED THROUGHOUT	30 JAN 79	SCALE: 1/4" = 1"
REV 2	CHANGED EDGE-TENDON NOTE	12/11/80	
REV 3	CHANGED PUNCH TO STENCIL PAINT	12 AUG 80	SHEET NO. 5
REV 4	CHANGED TITLE BLOCK	1/29/81	

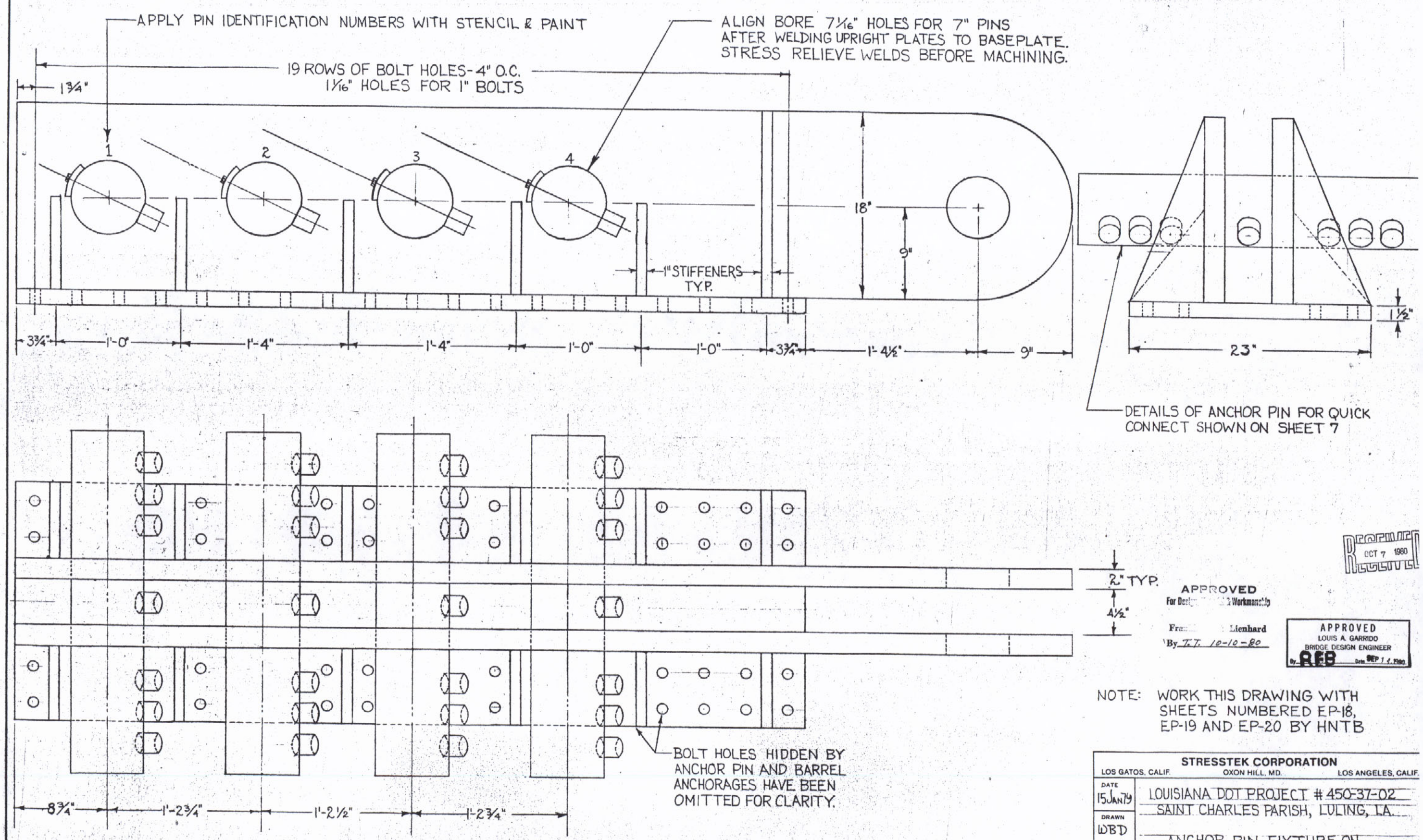

RECEIVED OCT 7 1980

APPROVED
For Design and Workmanship
From: Lienhard
By T.T. 10-10-80

APPROVED
LOUIS A. GARRIDO
BRIDGE DESIGN ENGINEER
By R.F.B. Date SEP 7 1980

NOTE: WORK THIS DRAWING WITH SHEETS NUMBERED EP-18, EP-19 AND EP-20 BY HNTB

STRESSTEK CORPORATION
LOS GATOS, CALIF. OXON HILL, MD. LOS ANGELES, CALIF.

DATE 15 JAN 79
DRAWN WBD
JOB NO.

LOUISIANA DOT PROJECT # 450-37-02
SAINT CHARLES PARISH, LULING, LA.

ANCHOR PIN FIXTURE ON THE QUICK CONNECT

REV 5	CHANGED PUNCH TO STENCIL & PAINT	24 Aug 79	REV. 1	CHANGED LOCATION OF PINS	30 Jan 79
REV 6	ADD STRESSRELIEVE NOTE.	10 Jan 78	REV 2	ADDED PIN IDENTIFICATION NO.5	12 Mar 79
REV 7	CHANGED TITLE BLOCK.		REV. 3	ADDED STOP-BLOCKS TO PINS	12 Mar 79
			REV. 4	ADDED LOCATION DIMENSIONS ON PINS (9")	12 Mar 79

SCALE: 1/4" = 1"
SHEET NO. 6

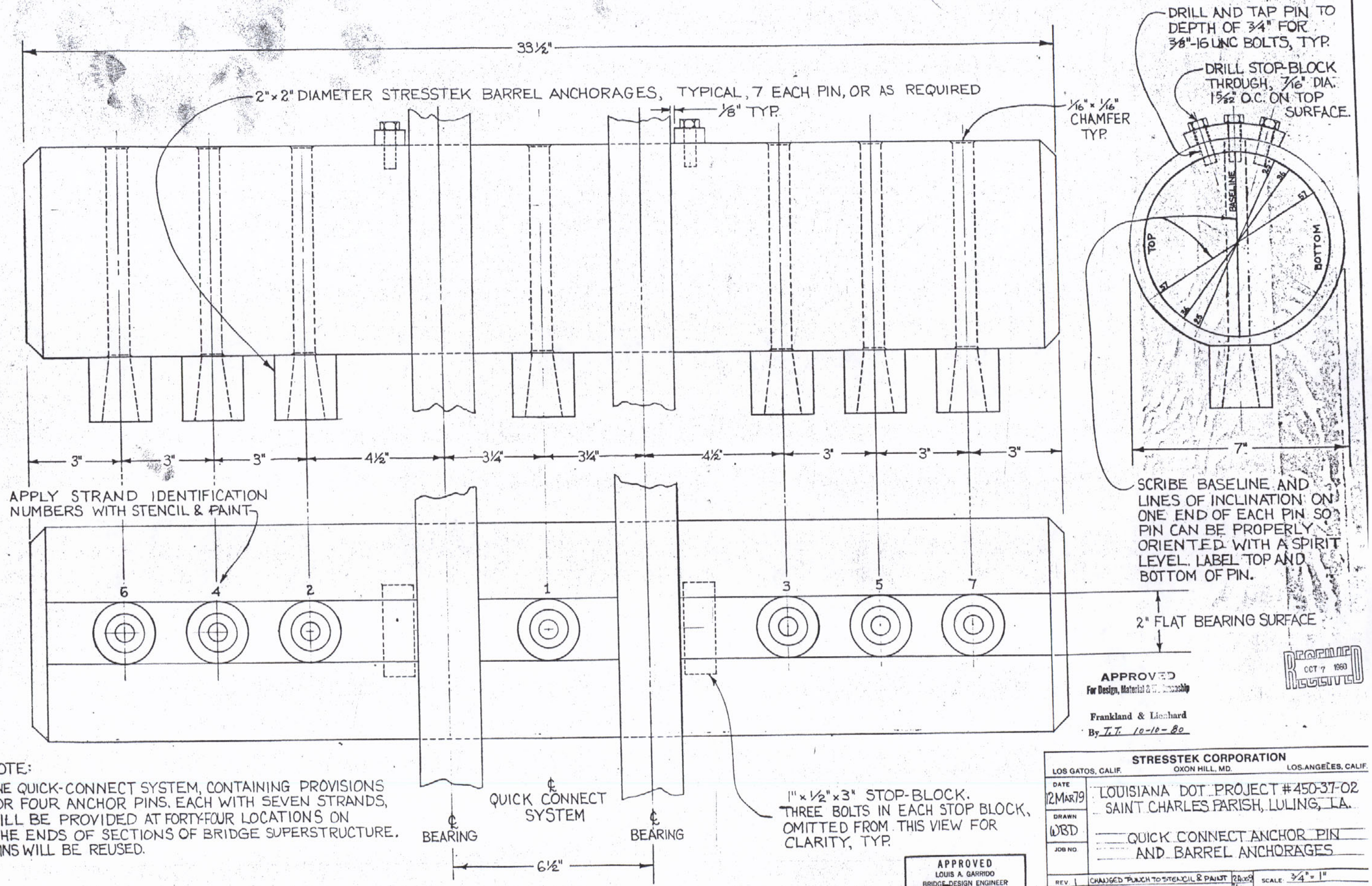
33½"
2"×2" DIAMETER STRESSTEK BARREL ANCHORAGES, TYPICAL, 7 EACH PIN, OR AS REQUIRED
⅛" TYP.
1/16"×1/16" CHAMFER TYP.
DRILL AND TAP PIN TO DEPTH OF ¾" FOR ⅜"-16 UNC BOLTS, TYP.
DRILL STOP-BLOCK THROUGH, 7/16" DIA. 1 5/32" O.C. ON TOP SURFACE.
BASELINE
TOP
BOTTOM
7"
3" 3" 3" 4½" 3¼" 3¼" 4½" 3" 3" 3"
APPLY STRAND IDENTIFICATION NUMBERS WITH STENCIL & PAINT
6 4 2 1 3 5 7
SCRIBE BASELINE AND LINES OF INCLINATION ON ONE END OF EACH PIN SO PIN CAN BE PROPERLY ORIENTED WITH A SPIRIT LEVEL. LABEL TOP AND BOTTOM OF PIN.
2" FLAT BEARING SURFACE
℄ QUICK CONNECT SYSTEM
℄ BEARING
℄ BEARING
6½"
1"×½"×3" STOP-BLOCK. THREE BOLTS IN EACH STOP BLOCK, OMITTED FROM THIS VIEW FOR CLARITY, TYP.
APPROVED
For Design, Material & Workmanship
Frankland & Lienhard
By T.T. 10-10-80
RECEIVED
OCT 7 1980
NOTE:
ONE QUICK-CONNECT SYSTEM, CONTAINING PROVISIONS FOR FOUR ANCHOR PINS, EACH WITH SEVEN STRANDS, WILL BE PROVIDED AT FORTY-FOUR LOCATIONS ON THE ENDS OF SECTIONS OF BRIDGE SUPERSTRUCTURE. PINS WILL BE REUSED.
APPROVED
LOUIS A. GARRIDO
BRIDGE DESIGN ENGINEER
By REB Date SEP 1 / 1980
STRESSTEK CORPORATION
LOS GATOS, CALIF. OXON HILL, MD. LOS ANGELES, CALIF.
DATE 12 MAR 79
DRAWN WBD
JOB NO.
LOUISIANA DOT PROJECT #450-37-02
SAINT CHARLES PARISH, LULING, LA.
QUICK CONNECT ANCHOR PIN AND BARREL ANCHORAGES
REV. 1 CHANGED PUNCH TO STENCIL & PAINT
REV. 2 CHANGED TITLE BLOCK
SCALE ¾" = 1"
SHEET NO. 7

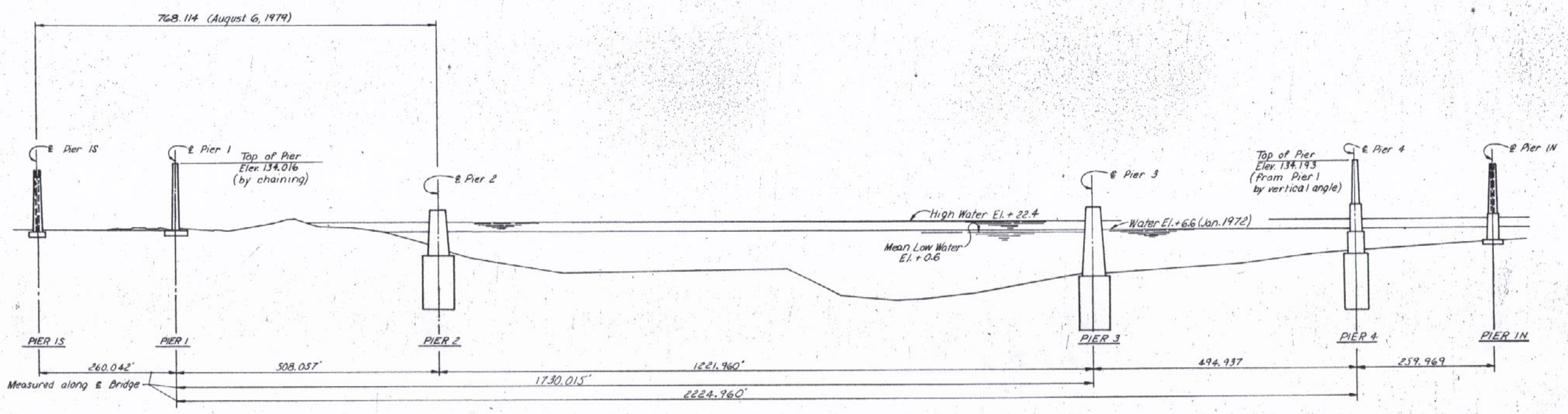

ELEVATION

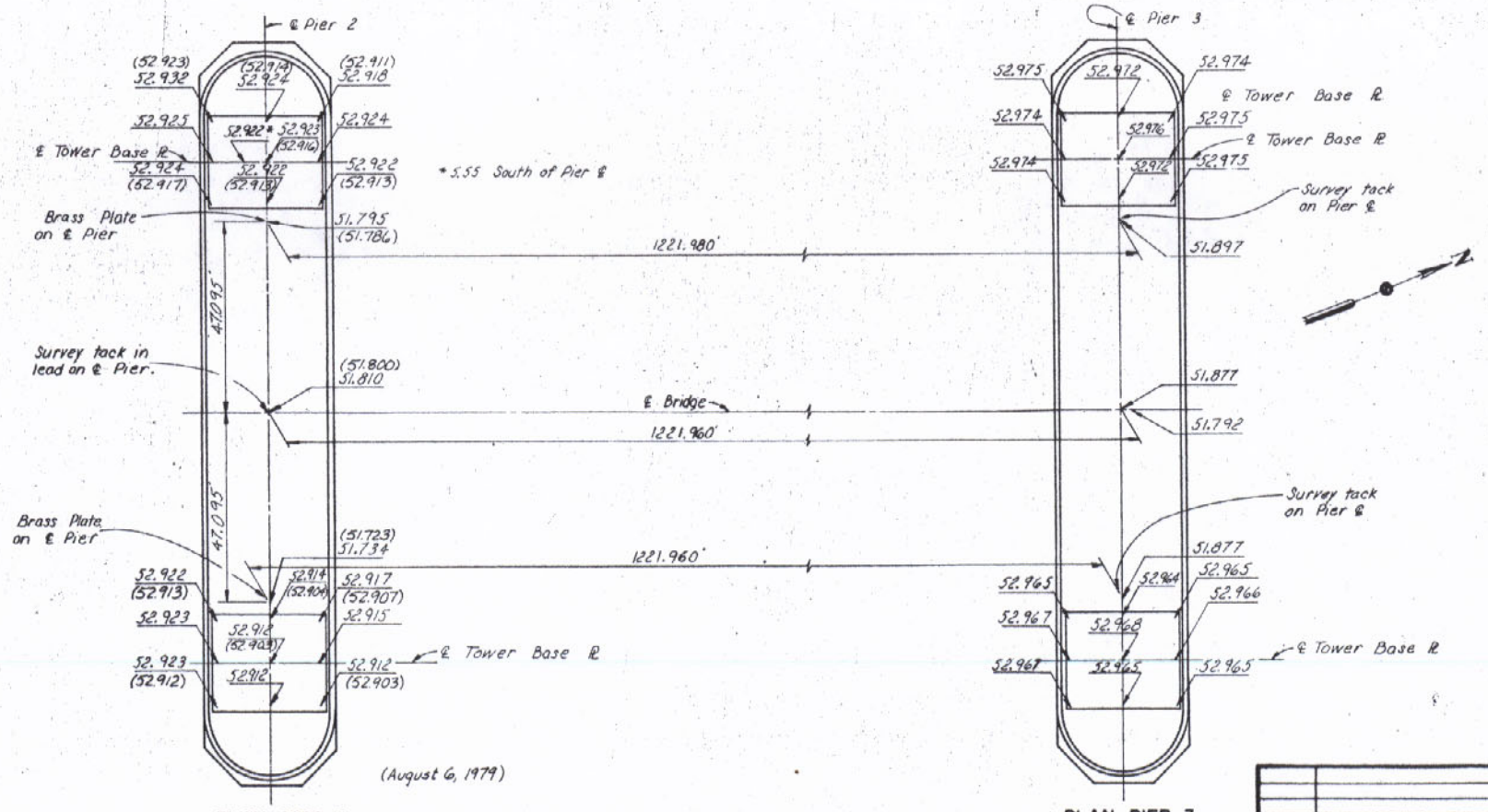

PLAN PIER 2

PLAN PIER 3

Note:
Distances are based on measured slope distances using Hewlett Packerd 3805. Vertical angles were measured using a Kern 1" Theodolite.
All dimensions are in feet.
Elevations are based on Bench Mark Elev. 11.016 a bolt cast horizontally into the east face of Pier 1.
Corner Elevations shown for top of anchor bolt base plates were taken along a perimeter approximately 1-foot outside of the anchor bolts. Elevations at the intersection of this perimeter and centerline pier, centerline base plate are also shown.

APPROVED
For Design, Material & Workmanship
Frankland & Lienhard
By T. T. OCT 23 1980

APPROVED
LOUIS A. GARRIDO
BRIDGE DESIGN ENGINEER
By RFB Date NOV 3 1980

HNTB
HOWARD NEEDLES TAMMEN & BERGENDOFF

Date	Description	by
8-23-79	August 6, 1979 Survey Data	

Revisions

ERECTOR
THE MELBOURNE BROTHERS CONSTRUCTION CO.
P.O. Box 2251 North Canton, Ohio 44720 216-494-1833

Owner - State of Louisiana
General Contractor - Williams Brothers Construction Co., Inc.
Fabricator - Ishikawajima - Harima Heavy Industries Co., Ltd.

AS BUILT PIER LOCATIONS

MISSISSIPPI RIVER BRIDGE (LULING)
MAINRIVER CROSSING SUPERSTRUCTURE
St. Charles Parish State Project No. 450-37-02

Date 9-1-78	Scale	Sheet No. S1
Made By	Chkd by	Apprvd by

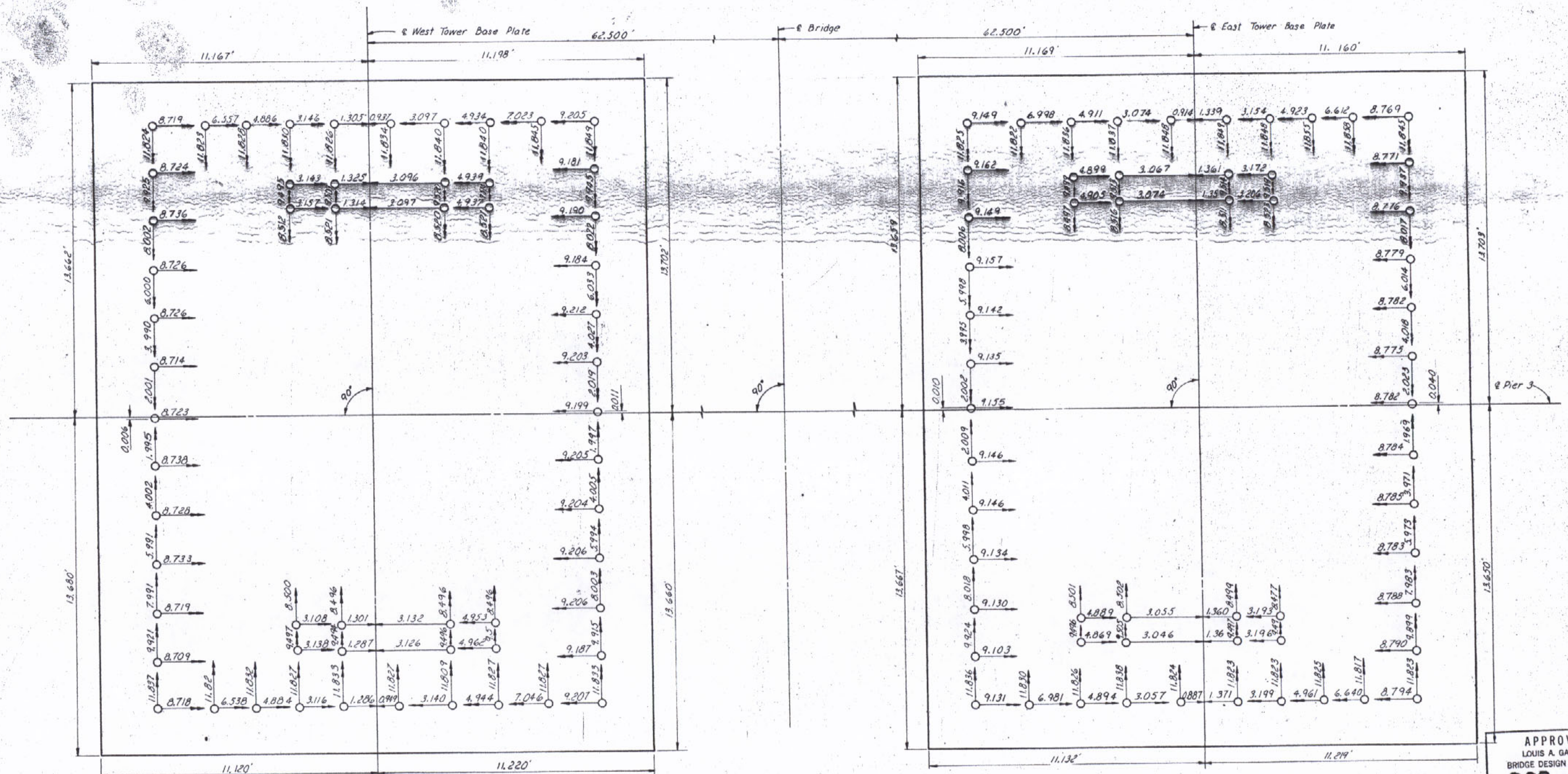

WEST COLUMN ANCHOR BOLTS

EAST COLUMN ANCHOR BOLTS

PLAN PIER 3

Note:
All dimensions are in feet and are at top of base plate.
Horizontal dimensions reference bolts to ℄ tower.
Vertical dimensions reference bolts to ℄ pier 3.
For relative position of tops of bolts, see Sheet S3.

HNTB
HOWARD NEEDLES TAMMEN & BERGENDOFF

APPROVED
LOUIS A. GARRIDO
BRIDGE DESIGN ENGINEER
By RFB Date NOV 3 1980

APPROVED
For Design, Material & Workmanship
Frankland & Lienhard
By T. T. OCT 23 1980

Date	Description	by
	Revisions	

ERECTOR
THE MELBOURNE BROTHERS CONSTRUCTION CO.
P.O. Box 2251 North Canton, Ohio 44720 216-494-1833

Owner - State of Louisiana
General Contractor - Williams Brothers Construction Co., Inc.
Fabricator - Ishikawajima - Harima Heavy Industries Co., Ltd.

PIER 3 ANCHOR BOLT LOCATIONS

MISSISSIPPI RIVER BRIDGE (LULING)
MAINRIVER CROSSING SUPERSTRUCTURE
St. Charles Parish State Project No. 450-37-02

Date 9-1-78	Scale	Sheet No. S2
Made By DLB	Chkd by MDM	Apprvd by

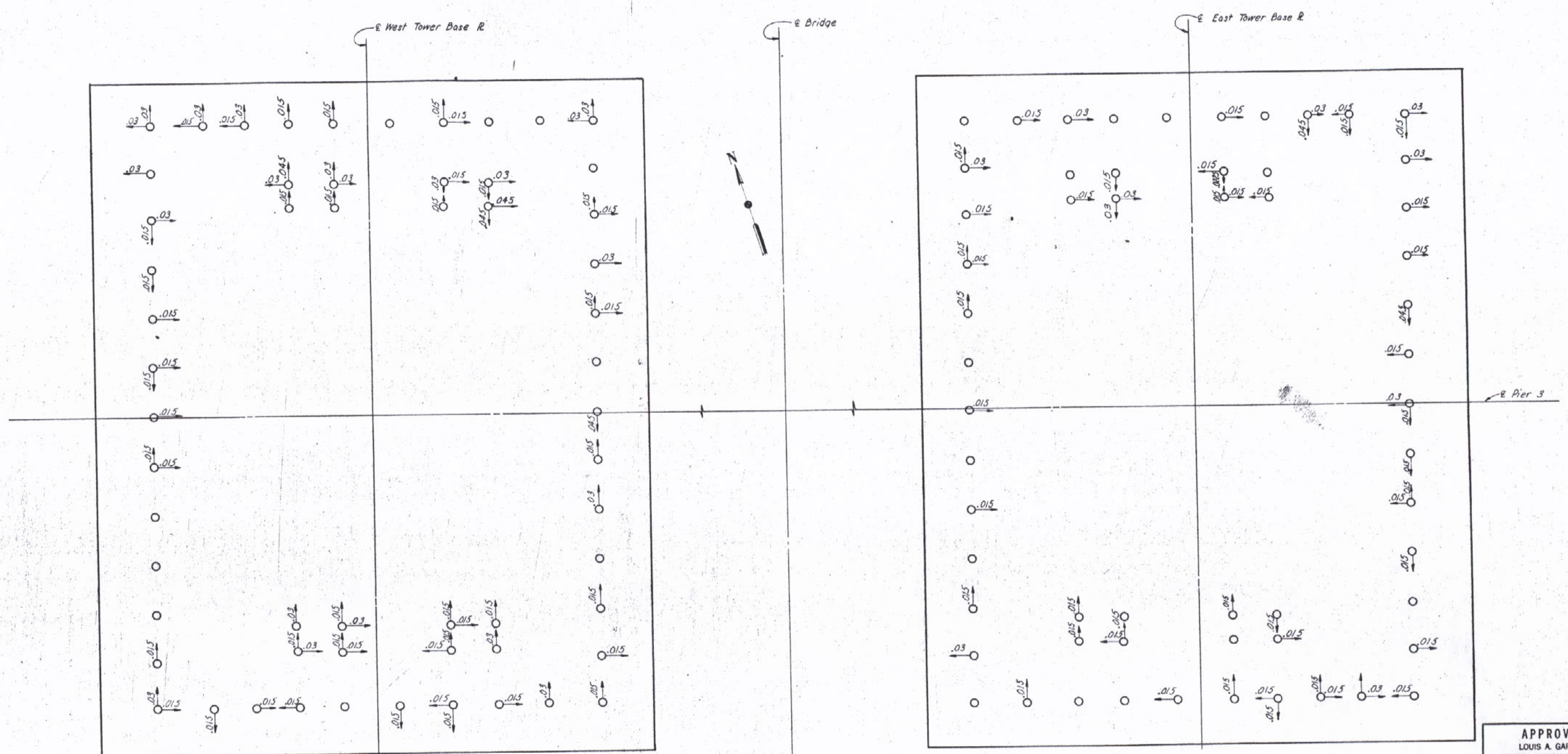

WEST COLUMN ANCHOR BOLTS

PLAN PIER 3

EAST COLUMN ANCHOR BOLTS

Notes:
Dimensions shown thus ⌊→ indicate, in feet, the relative position of the top of the anchor bolt with respect to the anchor bolt at the base plate. The positions were obtained by measuring from a 4-ft. spirit level to the anchor bolt when the level was vertical and placed just below the anchor bolt threads. The measured cont of the bolt was adjusted by the ratio 6/4 to account for the full length of the exposed anchor bolt.

HNTB
HOWARD NEEDLES TAMMEN & BERGENDOFF

APPROVED
For Design, Material & Workmanship
Frankland & Lienhard
By T.T. OCT 23 1980

APPROVED
LOUIS A. GARRIDO
BRIDGE DESIGN ENGINEER
By RED Date [redacted]
NOV 3 1980

Date	Description	by

Revisions

ERECTOR
THE MELBOURNE BROTHERS CONSTRUCTION CO.
P.O. Box 2251 North Canton, Ohio 44720 216-494-1833

Owner - State of Louisiana
General Contractor - Williams Brothers Construction Co., Inc.
Fabricator - Ishikawajima - Harima Heavy Industries Co., Ltd.

PIER 3 ANCHOR BOLT LOCATIONS

MISSISSIPPI RIVER BRIDGE (LULING)
MAINRIVER CROSSING SUPERSTRUCTURE
St. Charles Parish State Project No. 450-37-02

Date 9-1-78	Scale	Sheet No. S3
Made By	Chkd by	Apprvd by

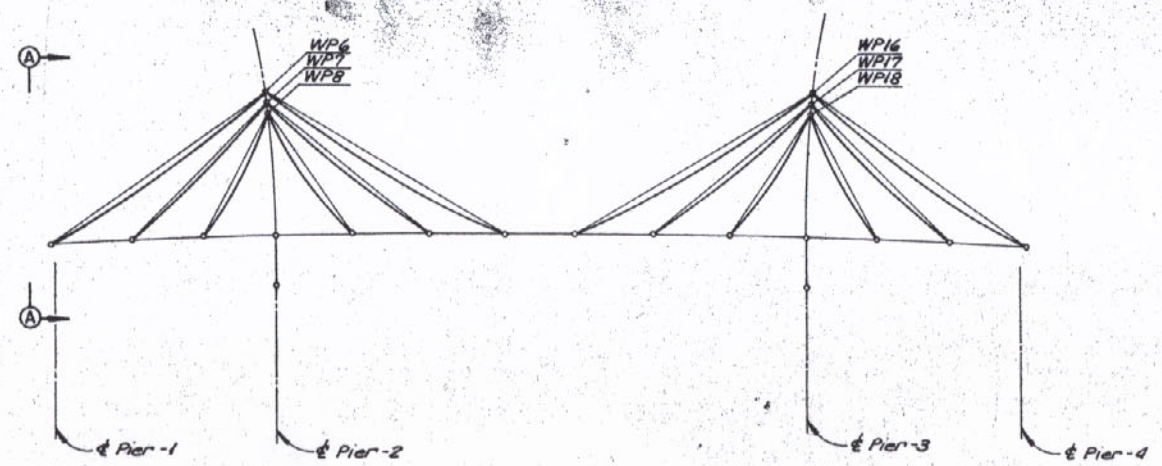

ELEVATION

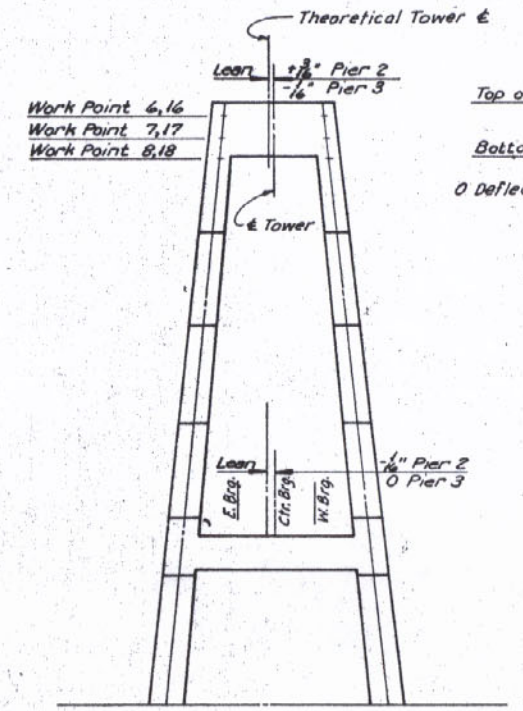

VIEW A-A

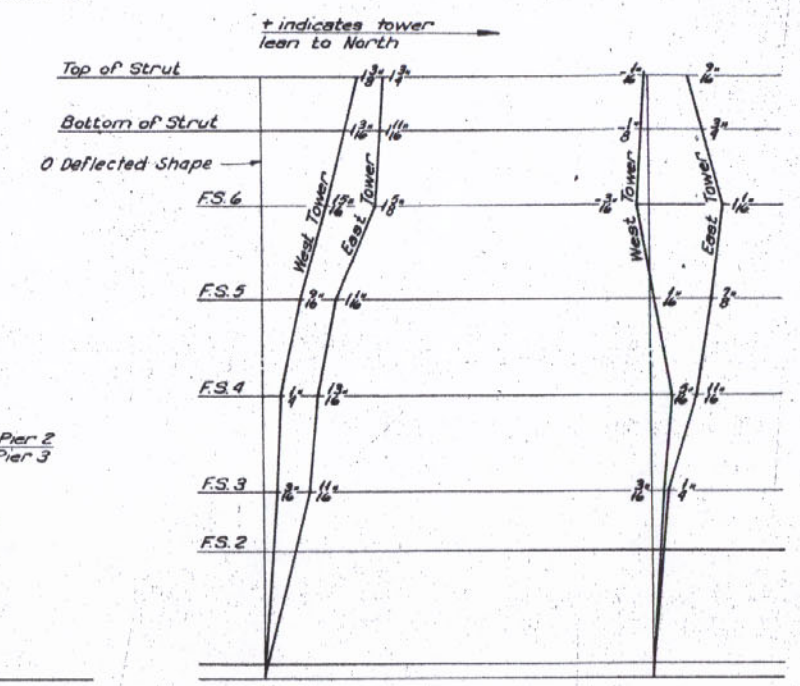

AS-ERECTED TOWER 2

AS-ERECTED TOWER 3

Tower lean parallel to centerline bridge plotted from survey data, dated 3 April, 1980.

1. *See highest base plate elevation as-built pier location, Drawing S-1.*
2. *See IHI Tower Fabrication Dimensions Diagram, Drawing S-3*
3. *See IHI Drawing F-114.*
4. *See IHI Saddle Drawings No. S-32, S-34, S-36.*
5. *Interpolated from survey data shown on this sheet.*
6. *Top of Strut T11 as surveyed May 1, 1980.*
7. *Top of Strut T11 as surveyed May 14, 1980.*

AS-BUILT TOWER DIMENSIONS

ITEM	NOTE	WORK PT: 6		WORK PT. 7		WORK PT: 8		WORK PT: 16		WORK PT. 17		WORK PT. 18	
		Line A	Line B	Line A	Line B	Line A	Line B	Line A	Line B	Line A	Line B	Line A	Line B
Pier Base Plate Elev.	1	52.923	52.913	52.923	52.913	52.923	52.913	52.976	52.968	52.976	52.968	52.976	52.968
Base Plate t	2	0.500	0.500	0.500	0.500	0.500	0.500	0.500	0.500	0.500	0.500	0.500	0.500
Tower Base ℄ to Saddle Base ℄	2	340.109	340.109	328.859	328.859	318.609	318.609	340.109	340.109	328.859	328.859	318.609	318.609
Fabrication Error	3	-0.021	-0.015	-0.021	-0.019	-0.023	-0.020	0.001	-0.009	-0.000	-0.013	0.001	0.012
Base ℄ to Tower W.P.	4	1.750	1.750	0.750	0.750	-0.750	-0.750	1.750	1.750	0.750	0.750	-0.750	-0.750
Elevation Work Point		395.261	395.257	383.011	383.003	371.259	371.252	395.336	395.318	383.085	383.064	371.336	371.339
Y-Co Fabrication	3	29.479	29.479	30.666	30.666	31.802	31.802	29.484	29.484	30.671	30.671	31.807	31.807
Tower Lean	5	-0.015	0.015	-0.014	0.014	-0.013	0.013	.005	-.005	.005	-.005	.005	-.005
℄ Bridge to Work Point		29.464	29.494	30.652	30.680	31.789	31.815	29.489	29.479	30.676	30.666	31.812	31.802
Longitudinal Tower													
Work Point As-Built	5	0.110	0.145	0.104	0.143	0.099	0.141	-0.006	0.051	-0.008	0.056	-0.010	0.062

NOTE	PIER 2	PIER 3
	6	7
East Bearing	150.96	150.96
West Bearing	150.96	150.97
Center Bearing	150.97	150.98

REVIEWED BY
FRANKLIN & LIENHARD
CONSULTING ENGINEERS
DATE 10-10-80
BY E.S.

RECEIVED
OCT 7 1980

APPROVED
LOUIS A. GARRIDO
BRIDGE DESIGN ENGINEER
By REB Date SEP 1 1 1980

ERECTOR
THE MELBOURNE BROTHERS CONSTRUCTION CO.
P.O. Box 2251 North Canton, Ohio 44720 216-494-1833

Owner - State of Louisiana
General Contractor - Williams Brothers Construction Co., Inc.
Fabricator - Ishikawajima - Harima Heavy Industries Co., Ltd.

TOWER AS BUILT

MISSISSIPPI RIVER BRIDGE (LULING)
MAINRIVER CROSSING SUPERSTRUCTURE
St. Charles Parish State Project No. 450-37-02

Date	Description	by
	Revisions	

Date 7-22-80 Scale N.A. Sheet No. S-4
Made By M.D.M. Chkd by Approved by

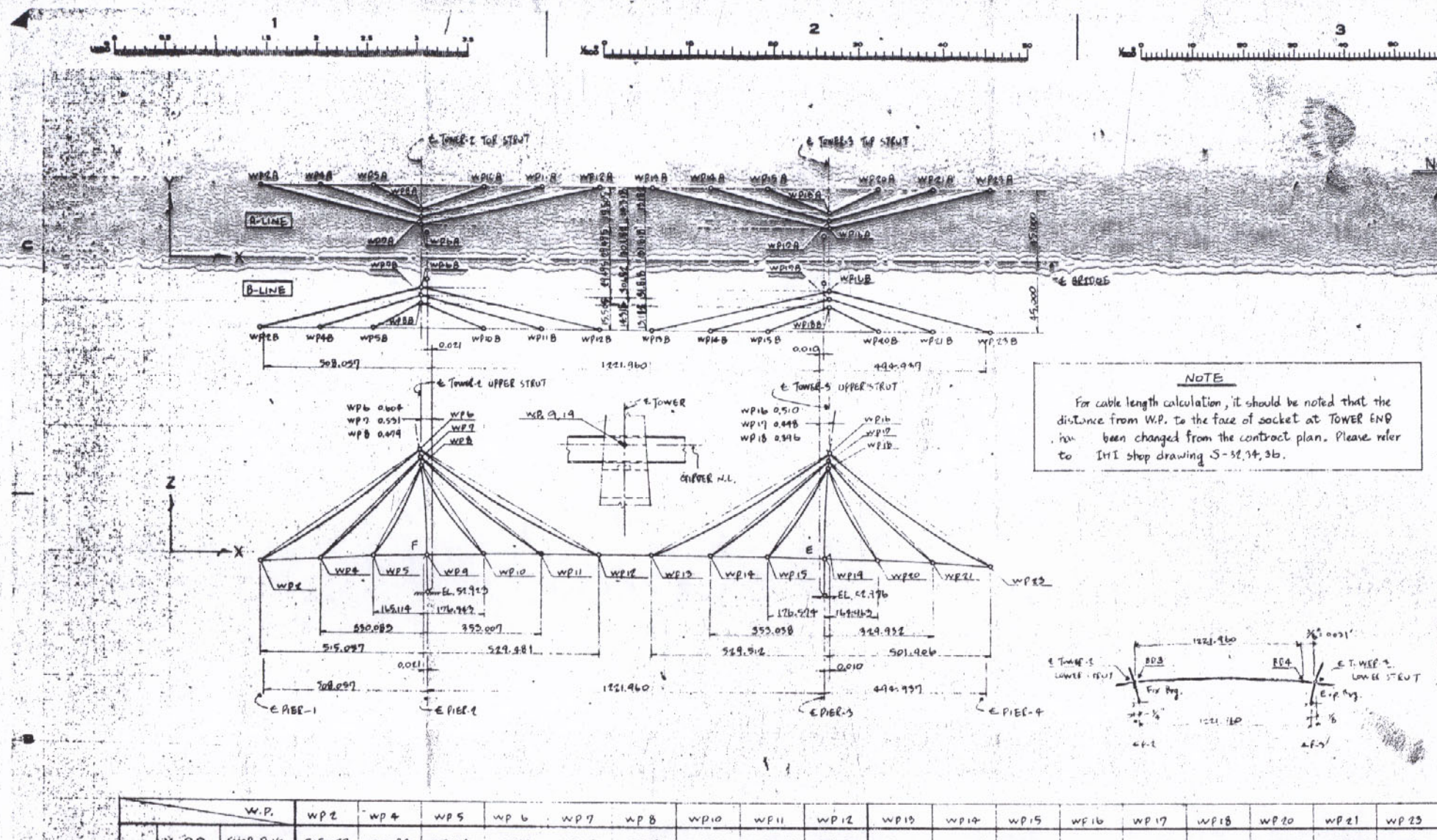

NOTE

For cable length calculation, it should be noted that the distance from W.P. to the face of socket at TOWER END has been changed from the contract plan. Please refer to IHI shop drawing S-33, 34, 36.

NOTE

1. This drawing has summarized the adjusting procedure of the exact span length and the axial camber on the girder and the fabricated error from the inspection reports, which might be considered on the cable length calculation.
2. The adjusting procedure has been approved on our letter to Freeland & Lienhard dated April 6th, 1999 (RC-416) and also be detailed here. The cable spans on bottom line of the detail are to be authorized for the shop fabrication.
3. The tower elevations at W.P.-6, 7, 8, 16, 17 & 18 are low in 0.077' at Pier-2 and in 0.064' at Pier-4 respectively from the contract plan, without the fabrication error, according to the low built-up of substructure.
4. X co-ordinates shown in the table are based on that the longitudinal offsets at tower W.P. from the tower vertical line are as the contract plan, but that no movement between ℄ BD-3 and ℄ Tower strut in at Tower-2 and all longitudinal offsets at the tower strut level are taken at Tower-3.
5. X co-ordinates shown in the table are distances from the inclined center line of TOWER STRUT to W.P. of SADDLE and CROSS GIRDER. The movement of ℄ BD-4 from ℄ STRUT of Tower-3 has been taken into account.
6. All fabrication errors are obtained from the inspection reports "SHOP ASSEMBLY RECORD" already submitted to BOT6 from IHI Quality Control Department, however these are not exact for distance between W.P.s.

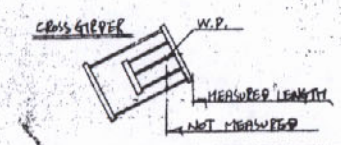

7. All shop assembly has not been performed. (center blocks of SPAN 3/4 not been performed), therefore no indications for "ERROR" and "FABRICATION" are at W.P.-12, 13 & 14. However, X-COs at W.P.-12, 13 & 14 have been estimated and X-COs at W.P.-15 thru 19 are depend on best estimation.
8. All values shown in the table exclude the erection error.

ADJUSTING PROCEDURE of FABRICATED CABLE SPAN

※ Due to exact span length and that the axial cambers have not been taken in each cable span, the fabricated cable spans are authorized as follows without the fabrication error.

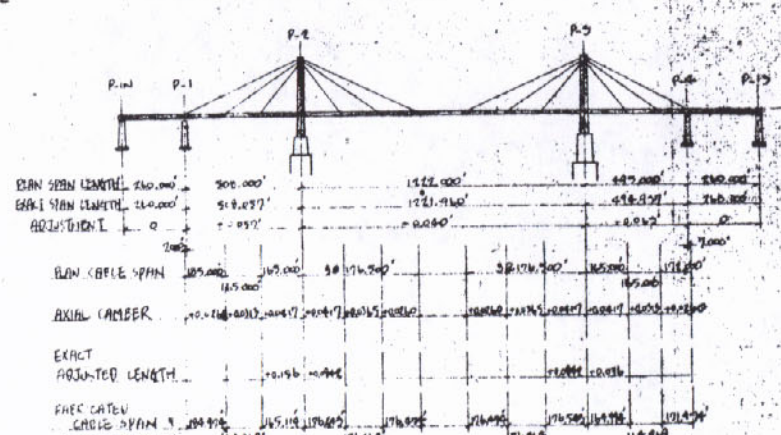

		W.P.	wp2	wp4	wp5	wp6	wp7	wp8	wp10	wp11	wp12	wp13	wp14	wp15	wp16	wp17	wp18	wp20	wp21	wp23
A-LINE	X-CO	SHOP DWG	515.057	330.083	165.114	0.583	0.510	0.458	176.543	353.007	529.481	529.512	353.038	176.594	0.500	0.458	0.386	164.463	329.932	501.906
	DISTANCE FROM W.P.-9/19 of TOWER	ERROR	-0.010	-0.047	-0.060	0.000	0.000	0.000	0.154	0.187	△ 0.254 ~~-0.041~~	△ -0.040 ~~-0.041~~	△ 0.185 ~~-0.041~~	△ 0.104 ~~-0.041~~	0.000	0.000	0.000	△ -0.060 ~~-0.041~~	△ 0.075 ~~-0.041~~	△ 0.077 ~~-0.041~~
		FABRICATION	515.047	330.036	165.074	0.583	0.510	0.458	176.697	353.194	△529.735 ~~529.470~~	△529.472 ~~529.470~~	△353.223 ~~353.129~~	△176.678 ~~176.641~~	0.500	0.458	0.386	△164.403 ~~164.422~~	⚠ 330.007	⚠ 501.983
	Y-CO	SHOP DWG	45.000	45.000	45.000	29.445	30.682	31.818	45.000	45.000	45.000	45.000	45.000	45.000	29.445	30.682	31.818	45.000	45.000	45.000
	DISTANCE FROM ℄ BRIDGE	ERROR	0.003	0.000	0.013	-0.016	-0.016	-0.016	0.034	-0.021	△ -0.008	△ 0.013	△ 0.000	△ 0.030 ~~-0.016~~	-0.011	-0.011	-0.011	0.016	△ 0.032 ~~-0.016~~	0.033
		FABRICATION	45.003	45.000	45.013	29.429	30.666	31.802	45.034	44.979	△45.008	△45.013	△45.000	△45.030 ~~45.016~~	29.434	30.671	31.807	45.016	△45.032 ~~45.016~~	45.033
	Z-CO (EL.)	SHOP DWG	147.45	154.32	159.44	375.173	382.923	391.173	166.91	169.12	170.21	170.21	169.12	166.91	395.216	382.926	391.226	159.44	154.32	147.93
		ERROR	-0.027	-0.027	-0.035	-0.021	-0.021	-0.023	-0.036	-0.036	△ -0.036	△ -0.006	△ -0.019	0.001	0.001	0.000	0.001	-0.006	-0.002	0.007
		FABRICATION	147.423	154.293	159.405	375.152	382.902	391.150	166.874	169.084	△170.174	△170.204	△169.101	166.911	395.217	382.926	391.227	159.434	154.318	147.937
B-LINE	X-CO	SHOP DWG	515.057	330.083	165.114	0.583	0.510	0.458	176.543	353.007	529.481	529.512	353.038	176.594	0.500	0.458	0.386	164.463	329.932	501.906
	DISTANCE FROM W.P.-9/19 of TOWER	ERROR	-0.002	-0.005	-0.050	0.000	0.000	0.000	0.171	0.213	△ 0.261 ~~-0.041~~	△ -0.040 ~~-0.041~~	△ 0.142 ~~-0.041~~	△ 0.150 ~~-0.041~~	0.000	0.000	0.000	△ -0.044 ~~-0.041~~	△ 0.082 ~~-0.041~~	△ 0.084 ~~-0.041~~
		FABRICATION	515.055	330.078	165.064	0.583	0.510	0.458	176.714	353.220	△529.742 ~~529.470~~	△529.472 ~~529.470~~	△353.180 ~~353.088~~	△176.724 ~~176.641~~	0.500	0.458	0.386	△164.419 ~~164.422~~	⚠ 330.014	⚠ 501.988
	Y-CO	SHOP DWG	45.000	45.000	45.000	29.445	30.682	31.818	45.000	45.000	45.000	45.000	45.000	45.000	29.445	30.682	31.818	45.000	45.000	45.000
	DISTANCE FROM ℄ BRIDGE	ERROR	0.059	0.049	0.034	-0.016	-0.016	-0.016	0.025	0.036	△ 0.010	△ 0.007	△ -0.026	-0.013	-0.011	-0.011	-0.011	0.049	0.008	0.013
		FABRICATION	45.059	45.049	45.034	29.429	30.666	31.802	45.025	45.036	△45.010	△45.007	△45.026	44.987	29.434	30.671	31.807	45.049	45.008	45.013
	Z-CO (EL.)	SHOP DWG	147.45	154.32	159.44	375.173	382.923	391.173	166.91	169.12	170.21	170.21	169.12	166.91	395.216	382.926	391.226	159.44	154.32	147.93
		ERROR	-0.026	-0.013	-0.024	-0.015	-0.019	-0.020	-0.042	△ -0.019	△ -0.045	△ -0.010	△ -0.013	-0.013	-0.009	-0.013	0.012	0.000	-0.003	0.045
		FABRICATION	147.424	154.307	159.416	375.158	382.904	391.153	166.868	169.101	△170.165	△170.200	△169.107	166.897	395.217	382.913	391.233	159.440	154.317	147.885

Value for "Shop Dwg" means those to be fabricated shown on shop dwgs.
Value for "Error" means fabrication error.
Value for "Fabrication" means fabricated dimension as total of "Shop Dwg" and "Error".

⚠	9/15/00	Minor Change	Y.N
⚠	6/6/00	W.P. 15, 20, 21, 23. Added W.P. 12, 13 & 14. Revised	Y.N
NO.	DATE	DESCRIPTION REVISIONS	BY

PREPARED BY: Y. YAMASAKI

JUN 12 1980

MARK	PARTICULARS	MATERIAL	TEST PIECE	WORKING NO. REQUIRED	SPARE	TOTAL	PER ONE STRUT	TOTAL	REMARKS

MANAGER / DEPUTY MANAGER / CHIEF / ENG'R IN CHARGE / CHECKED BY / DRAWN BY: U. UEJI / DATE DRAWN: 98.03.31 / 98.03.25

WILLIAMS BROTHERS CONSTRUCTION CO., INC.

LULING BRIDGE (AT SHOP FAB STAGE) W.P.-COORDINATE

WORK NO. 4111-079 / 139 | CLASSIFICATION 09 / 49 | DRAWING NO. LB-7 F-114 | SCALE

Ishikawajima-Harima Heavy Industries Co., Ltd.

Materials Handling Equipment & Steel Structures Div. — BRIDGE DESIGN Sec. STEEL STRUCTURES DESIGN Dept.

1	承認中図中	
2	検定図	
3	改正図(認図付図)	
4		
5		
6		
7		
8		

品番年月日 / 組図 / 5.1.17

CABLE ERECTION LOADS, DISPLACEMENTS AND INCLINATION OF THE TOWER (1/2)

STAGE 1

Add Stay P3 and T11. Remove T10
Jack at cross girder 3 to seat all P3 strands on shim packs.

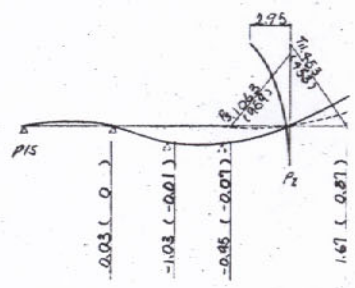

STAGE 2

Add Block 12

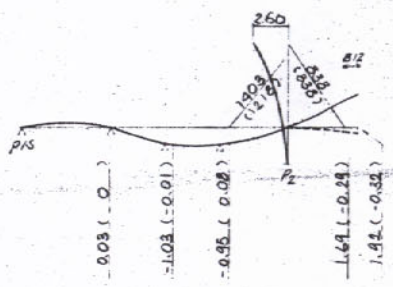

STAGE 3

Add Stay P4, Remove T11
Jack at cross girder 4 to seat all P4 strands on shim packs.

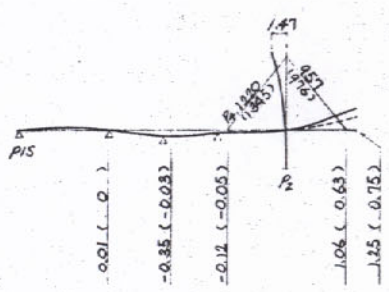

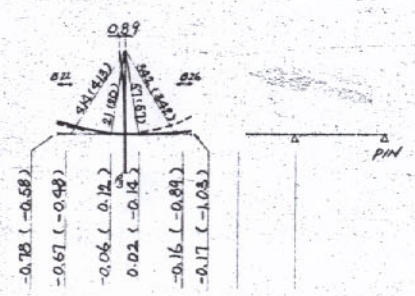

Add Blocks 22, 26

STAGE 4

Add Block 13
Falsework Bent 3 is to be released

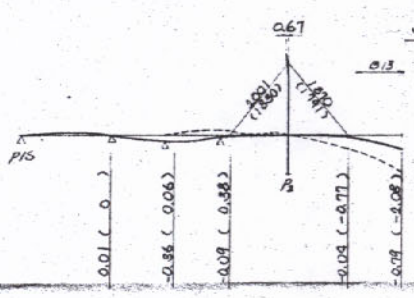

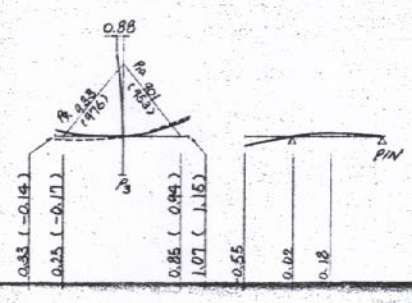

Add Stay P9 and P10. Remove T22, T25
Jack at cross girder 9 and 10 to seat all P9 and P10 strands on shim packs.

STAGE 5

Add Stay P2 and T13
Jack at cross girder 2 to seat all P2 strands without shim packs.

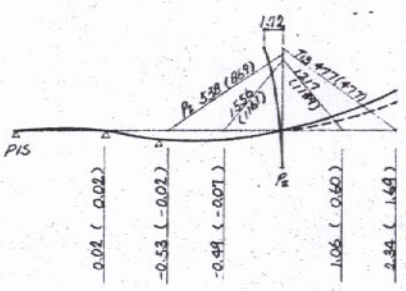

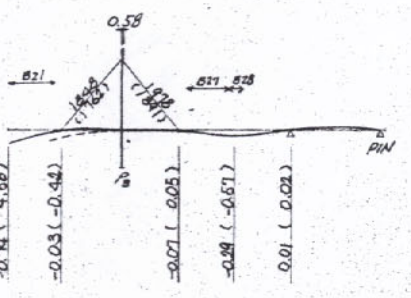

Add Blocks 21, 27, 28

STAGE 6

Add Block 14, Adjust P2
Jack at cross girder 2 to seat all P2 strands on 6-inch shim packs.

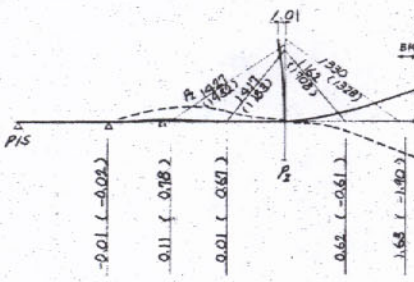

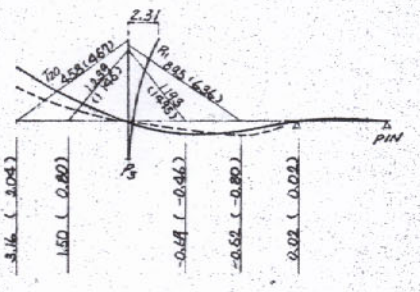

Add Stay Half P11, T20
Jack at cross girder 11 to seat half P11 strands on shim packs.

STAGE 7

Add Stay P5. Remove T13
Jack at cross girder 5 to seat all P5 strands on shim packs.
Falsework Bent 2 is to be released.

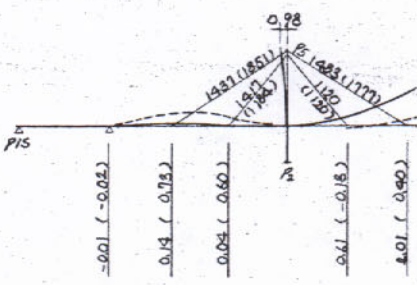

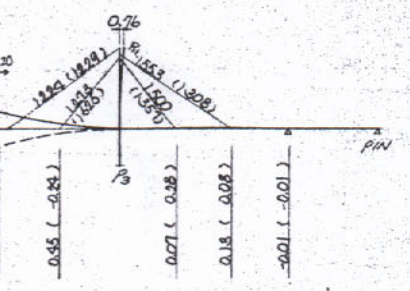

Add Stay Half P11, Block 20
Jack at cross girder 11 to seat half P11 strands on shim packs.

STAGE 8

Add Half P1 and Block 15
Jack at cross girder 1 to seat half P1 strands without shim packs.

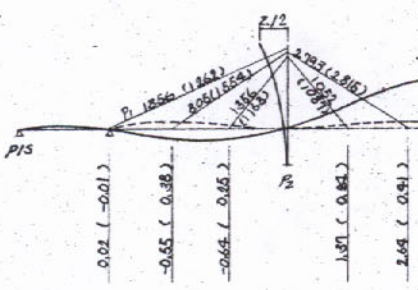

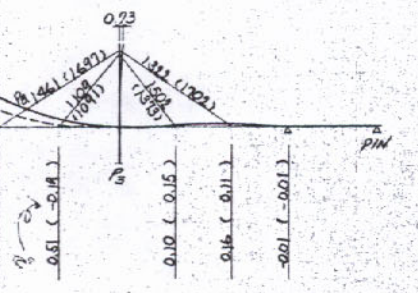

Add Stay P8. Remove T20
Jack at cross girder 8 to seat all P8 strands on shim packs.

CABLE ERECTION LOADS, DISPLACEMENTS AND INCLINATION OF THE TOWER (2/2)

STAGE 9

Add Half P_1 and T_{15}
Jack at cross girder 1 to seat half P_1 strands without shim packs.

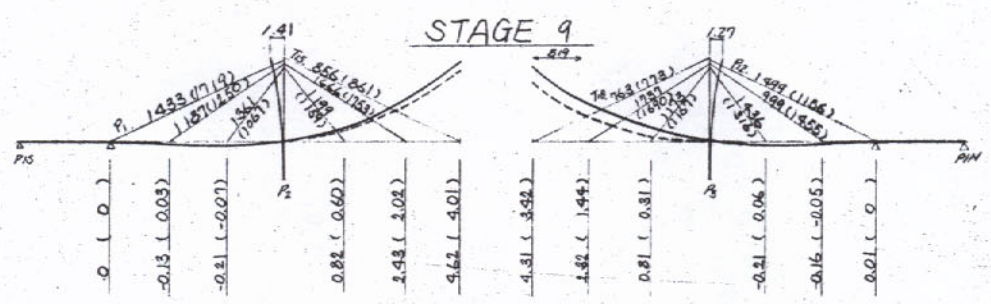

Add Stay P_{12}, Block 19, T_{18}
Jack at cross girder 12 to seat all P_{12} strands without shim packs.

STAGE 10

Add Block 16

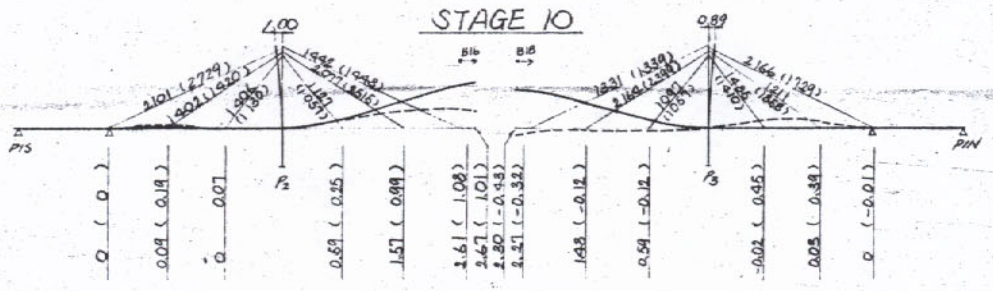

Add Block 18

STAGE 11

Add Stay P_6, Adjust P_1, P_2
Jack at cross girder 6 to seat P_6 strands on shim packs.
Jack at cross girder 1 to seat all P_1 strands on 8-inch.
Jack at cross girder 2 to seat all P_2 on 2-inch.

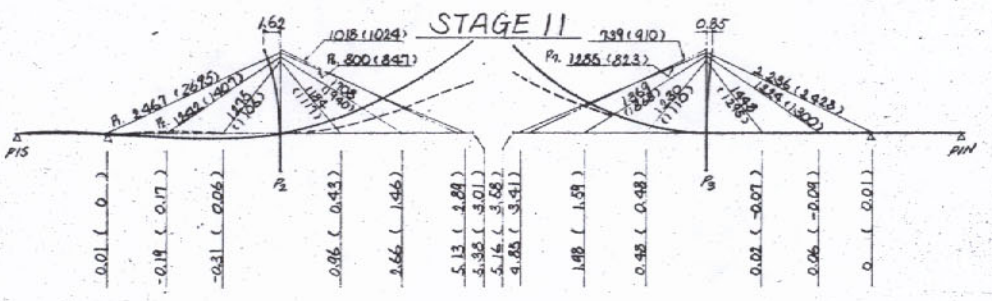

Add P_7, Adjust P_1
Jack at cross girder 7 to seat all P_1 strands on shim packs
Jack at cross girder 7 to seat all P_2 strands on 10.25 inch shim packs.

STAGE 12

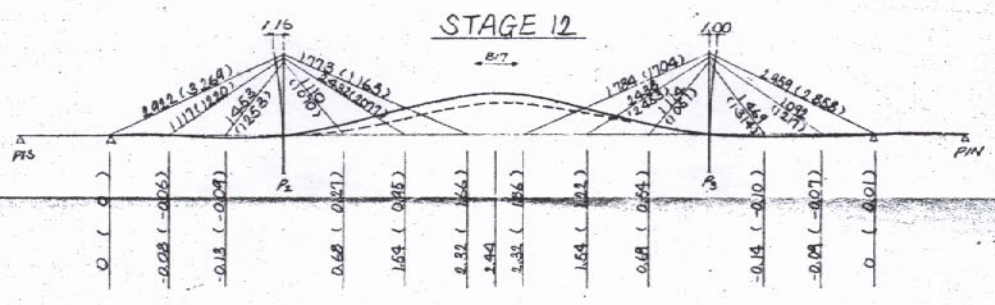

Add Block 17, Remove T_{15}, T_{16}
Jack at cross girder 1 and 12 to seat all strands on nominal shim packs.

STAGE 13

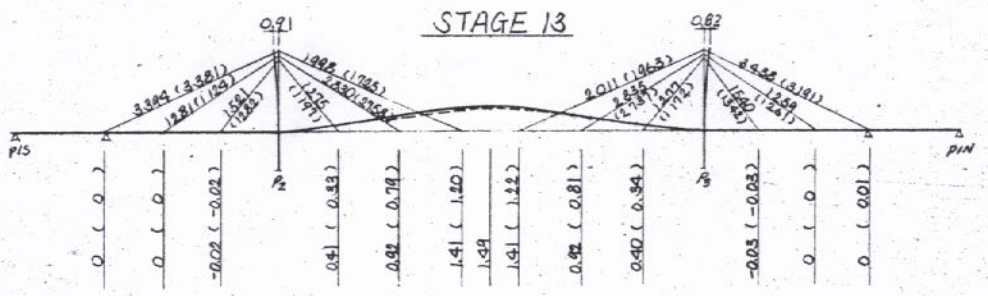

Add Curbs, Med. and Frg. PC

STAGE 14

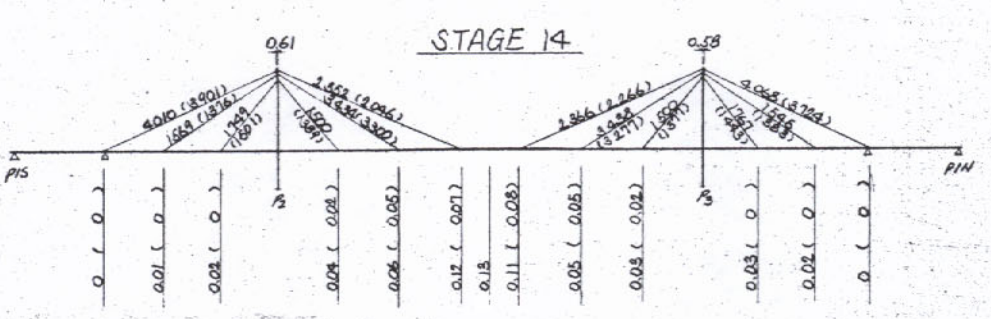

Add Wearing Surface

STAGE 15

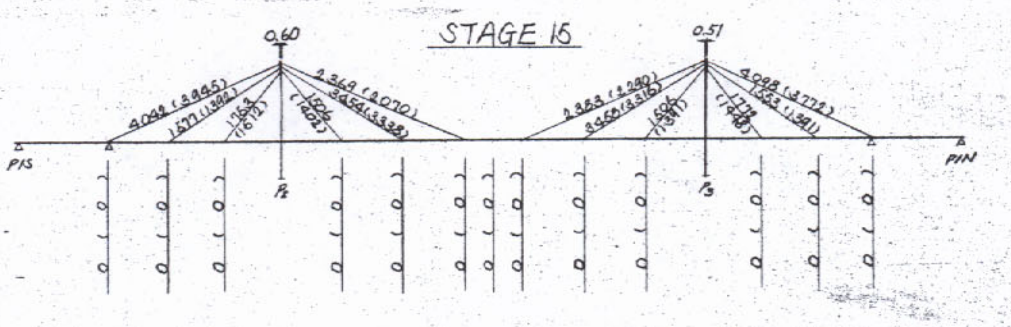

Add Cable Grout, Handrail

NOTE
1. DIMENSIONS ARE KIPS FOR CABLE ERECTION LOADS AND FEET FOR DISPLACEMENTS.
2. VALUES OF SIGN ( ) ARE ONES OF ANALYSIS BY M.B.C.C.
3. VALUES OF DISPLACEMENTS ARE DIFFERENCE FROM STAGE 15.
4. ERECTION PROCEDURE IS ACCORDING TO DESIGNS EP12~16 BY M.B.C.C.
5. VALUES OF INCLINATION OF THE TOWER ARE ONES AT POINTS WP6 AND WP16.

FABRICATED CABLE LENGTH

CABLE NO.			CABLE GEOMETRY: ELEVATIONS DECK W.P. FEET	ELEVATIONS TOWER W.P. FEET	VERTICAL DISTANCE BETWEEN W.P.S FEET	LONGITUDINAL OFFSET OF TOWER W.P. FROM VERTICAL LINE THROUGH ℄ OF TOWER STRUT FEET	HORIZONTAL (LONGITUDINAL) DISTANCE BETWEEN W.P.S FEET	DISTANCE ℄ BRIDGE TO ℄ OF W.P.S (TRANSVERSE): DECK W.P. FEET	TOWER W.P. FEET	TRANSVERSE DISTANCE BETWEEN W.P.S FEET	STRAIGHT LINE LENGTH OF CABLE FROM DECK W.P. TO TOWER W.P. FEET	DISTANCE FROM W.P. TO FACE OF SOCKET (DECK END + TOWER END): SHIM DECK SOCKET FEET	SHIM TOWER SOCKET FEET	DECK FEET	TOWER FEET	TOTAL FEET	TOTAL STRAIGHT LINE LENGTH FROM DECK SOCKET TO TOWER SOCKET (L_1) FEET	CABLE PROPERTIES: AREA OF CABLE (WIRE ONLY) SQ. INCH	APPROX. WEIGHT OF CABLE (INCL. HELIX WIRE, GROUT & RE PIPE) LBS/FT.	AVERAGE D.L. IN CABLE (WITHOUT FUTURE PAVING) KIPS	L FEET	FABRICATED LENGTH OF STRAND FROM FACE OF DECK SOCKET TO FACE OF TOWER SOCKET: I·H·I FEET	MBCC FEET	DIFFERENCE INCH
①			②	③	④=③-②	⑤	⑥	⑦	⑧	⑨=⑦-⑧	⑩=√(⑥²+⑨²)	⑪	⑫	⑬	⑭	⑮=⑪+⑫+⑬	⑯	⑰=⑩+⑥+⑨	⑰	⑱	⑲=⑰-⑱
A-LINE (WEST SIDE)	PIER-2	1	147.423	395.152	247.729	0.583	514.464	45.003	29.479	15.524	571.213	0.500	0	5.51	3.682	9.692	580.905	53.18	268	4.042	514.698	579.411	579.345	0.792
		2	164.293	382.402	228.609	0.510	329.526	45.000	30.666	14.344	401.316	0.333	0	4.42	3.842	8.595	409.911	20.70	102	1.577	329.838	408.842	408.897	-0.660
		3	169.405	371.150	211.745	0.458	164.616	45.013	31.802	13.211	268.531	0.333	0	3.25	4.751	8.334	276.865	20.70	102	1.753	165.145	276.058	276.133	-0.900
		4	166.874	371.150	204.276	0.458	177.155	45.034	31.802	13.232	270.717	0.333	0	3.25	4.632	8.215	278.932	20.21	113	1.506	177.648	278.217	278.269	-0.624
		5	169.084	382.402	213.818	0.510	353.704	49.979	30.666	14.313	413.557	0.333	0	4.42	3.706	8.459	422.016	41.41	203	3.454	353.993	420.810	420.830	-0.240
		6	170.174	395.152	224.978	0.583	530.318	45.008	29.479	15.529	576.275	0.500	0	5.50	3.354	9.354	585.629	30.12	143	2.369	530.545	584.066		
	PIER-3	7	170.204	395.227	225.023	0.500	529.972	45.013	29.484	15.529	575.975	0.500	0	5.50	3.354	9.354	585.329	30.12	143	2.383	530.199	583.757		
		8	169.101	382.976	213.875	0.438	353.661	45.000	30.671	14.329	413.550	0.333	0	4.42	3.706	8.459	422.009	41.41	203	3.458	353.951	420.801		
		9	166.911	371.227	204.316	0.386	177.064	45.030	31.807	13.223	270.687	0.333	0	3.25	4.632	8.215	278.902	20.21	113	1.506	177.557	278.187	278.290	-1.236
		10	169.434	371.227	211.793	0.386	164.517	45.016	31.807	13.209	268.508	0.333	0	3.25	4.751	8.334	276.842	20.70	102	1.772	165.046	276.026	276.095	-0.828
		11	169.318	382.976	228.658	0.438	329.569	45.032	30.671	14.361	401.381	0.333	0	4.42	3.842	8.595	409.976	20.70	102	1.553	329.882	408.923	408.911	0.144
		12	147.487	395.227	247.740	0.500	501.483	45.033	29.484	15.549	559.356	0.500	0	5.50	3.698	9.698	569.054	53.18	268	4.098	501.724	567.567	567.517	0.600
B-LINE (EAST SIDE)	PIER-2	1	147.424	395.158	247.734	0.583	514.472	45.059	29.479	15.580	571.224	0.500	0	5.51	3.682	9.692	580.916	53.18	268	4.042	514.708	579.422	579.356	0.792
		2	164.307	382.904	228.597	0.510	329.568	45.049	30.666	14.383	401.396	0.333	0	4.42	3.842	8.595	409.941	20.70	102	1.577	329.882	408.872	408.926	-0.648
		3	169.416	371.153	211.737	0.458	164.606	45.034	31.802	13.232	268.520	0.333	0	3.25	4.751	8.334	276.854	20.70	102	1.753	165.137	276.047	276.121	-0.888
		4	166.868	371.153	204.285	0.458	177.172	45.025	31.802	13.223	270.734	0.333	0	3.25	4.632	8.215	278.949	20.21	113	1.506	177.665	278.234	278.287	-0.636
		5	169.101	382.904	213.803	0.510	363.730	45.036	30.666	14.370	413.574	0.333	0	4.42	3.706	8.459	422.033	41.41	203	3.454	354.022	420.827	420.847	-0.240
		6	170.165	395.158	224.993	0.583	530.325	45.010	29.479	15.531	576.288	0.500	0	5.50	3.354	9.354	585.642	30.12	143	2.369	530.552	584.079		
	PIER-3	7	170.200	395.217	225.017	0.500	529.972	45.007	29.484	15.523	575.972	0.500	0	5.50	3.354	9.354	585.326	30.12	143	2.383	530.199	583.754		
		8	169.107	382.963	213.856	0.438	353.618	45.026	30.671	14.355	413.505	0.333	0	4.42	3.706	8.459	421.964	41.41	203	3.458	353.909	420.757		
		9	166.897	371.238	204.341	0.386	177.110	44.987	31.807	13.180	270.734	0.333	0	3.25	4.632	8.215	278.949	20.21	113	1.506	177.600	278.234	278.336	-1.224
		10	169.440	371.238	211.798	0.386	164.533	45.044	31.807	13.242	268.523	0.333	0	3.25	4.751	8.334	276.857	20.70	102	1.772	165.065	276.041	276.111	-0.840
		11	169.317	382.963	228.646	0.438	329.576	45.008	30.671	14.337	401.379	0.333	0	4.42	3.842	8.595	409.974	20.70	102	1.553	329.888	408.921	408.911	0.120
		12	147.885	395.217	247.332	0.500	501.490	45.013	29.484	15.529	559.380	0.500	0	5.50	3.698	9.698	569.078	53.18	268	4.098	501.730	567.591	567.540	0.612

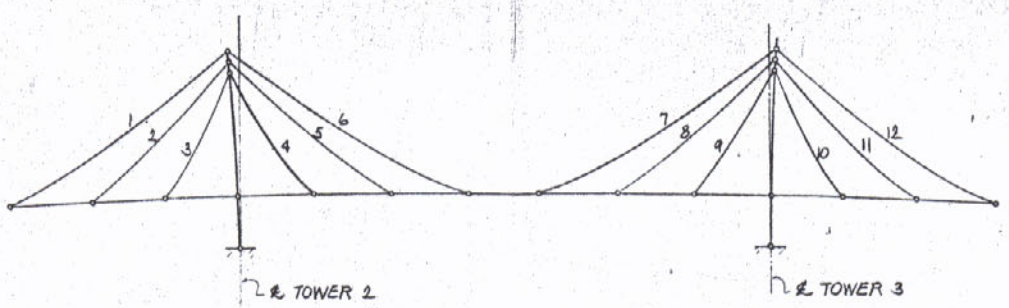

KEY ELEVATION

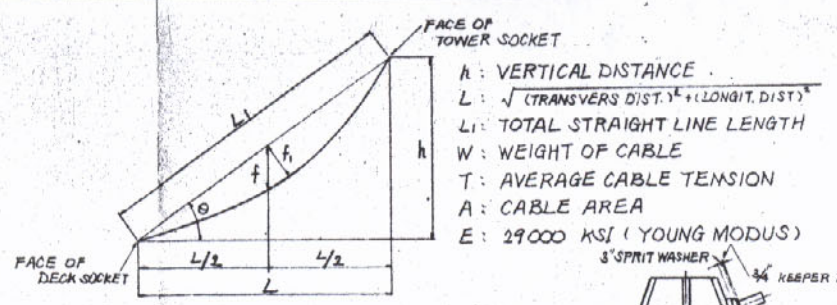

h : VERTICAL DISTANCE

L : $\sqrt{(\text{TRANSVERS DIST.})^2 + (\text{LONGIT. DIST})^2}$

L_1 : TOTAL STRAIGHT LINE LENGTH

W : WEIGHT OF CABLE

T : AVERAGE CABLE TENSION

A : CABLE AREA

E : 29000 KSI (YOUNG MODUS)

$$f = \frac{W \times L_1^2}{8 \times T}$$

$$f_1 = f \times \cos\theta$$

$$L_{comb} = L_1\left(1 + \frac{8 \times f_1^2}{3 \times L_1^2}\right) - \frac{T \times L_1}{A \times E}$$

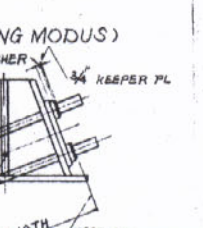

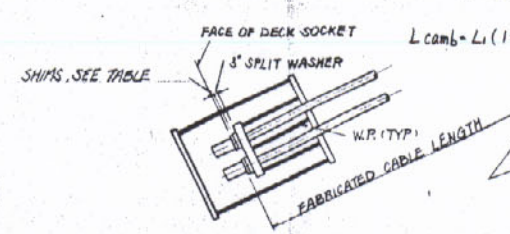

CABLE GEOMETRY