INDEX OF SHEETS

SHEET No.	DESCRIPTION
1	TITLE SHEET AND LAYOUT MAP
2	(NOT USED)
3	GENERAL NOTES AND SUMMARY OF ESTIMATED QUANTITIES
4-11	MINIMUM CONSTRUCTION SIGNING
12	KEY GENERAL PLAN AND ELEVATION
13	LULING BRIDGE PROFILE
14	SPAN 1M AND PLAN LAYOUT
15	SPAN 3M AND PLAN LAYOUT
16	SPANS 4M & 5M 2004 SOUTHBOUND CONCRETE TEST SECTION
17	ITEM S-108 LAYOUT (SOUTH END @ ONRAMP)
18-19	EXISTING 1999 CONCRETE TEST SECTION DETAILS
20	EXISTING 1999 CONCRETE TEST SECTION REINFORCED STEEL LAYOUT
21	FABRIC LAYOUT AND SFRC FORMING ALLOWANCE
22-25	LAYOUT DIMENSIONS SOUTHBOUND CONCRETE TEST SECTIONS
26	EXPANSION JOINT SIGNAGE
27-30	EXPANSION JOINT REPAIRS/DETAILS
31	E2 UNIT
32	MEDIAN BARRIER TEMPORARY COVER PLATE
33-34	NEW E1 CROSS SECTIONS & PLAN VIEWS
35-41	SUPPORT ASSEMBLY SECTIONS AND DETAILS
42-48	TRAFFIC CONTROL SHEETS
	REFERENCE PLANS
101-106	S.P. No. 450-37-02 EXPANSION JOINT E1 ORIGINAL PROJECT DRAWINGS
107-109	S.P. No. 450-37-02 EXPANSION JOINT E2 ORIGINAL PROJECT DRAWINGS
110-116	VENDOR SUPPLIED E2 SHOP DRAWINGS E2 SOUTHBOUND
117-126	VENDOR SUPPLIED E2 SHOP DRAWINGS E2 NORTHBOUND

TOTAL SHEETS = 73

STATE OF LOUISIANA
DEPARTMENT OF TRANSPORTATION & DEVELOPMENT

PLANS OF PROPOSED

STATE HIGHWAY

F.A.P. NO. 4503(509)
STATE PROJECT NO. 450-37-0020

MISSISSIPPI RIVER BRIDGE (LULING)

DECK TEST SECTION, E2 JOINT REPAIRS, & E1 JOINT REPLACEMENT

ST. CHARLES PARISH
ROUTE INTERSTATE-310

VICINITY MAP

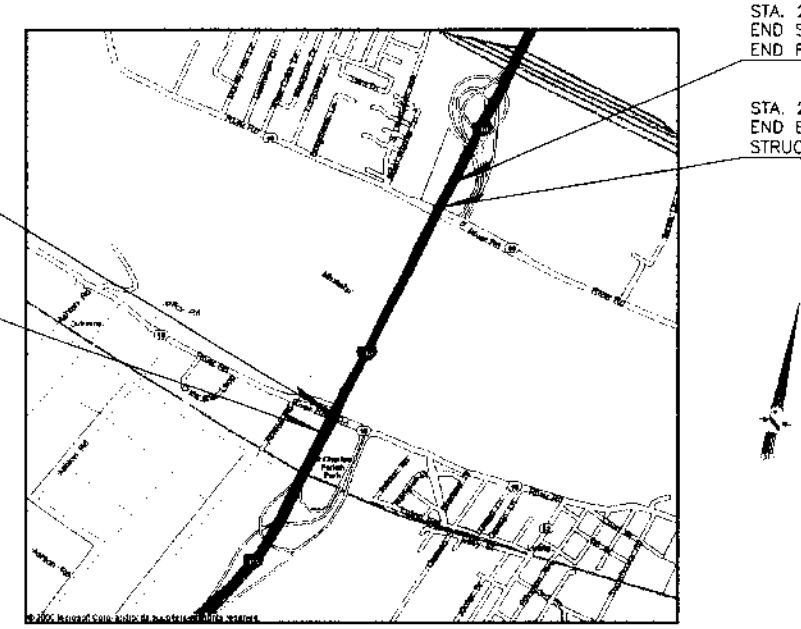

LAYOUT MAP

0 0.25 0.5 0.75 1.0 MILES

TRAFFIC DATA: 2002 ADT = 35,594
2022 ADT = 56,048
D = 55%
K = 10%
T = 7%

DESIGN SPEED = 70 MPH

RECOMMENDED FOR APPROVAL:

HUVAL & ASSOCIATES, INC.

DATE: 2/25/04

APPROVED:

D.O.T.D. CHIEF ENGINEER

DATE 3-5-04

FED. HWY. ADMINISTRATION

DATE

SCHEDULE OF REVISIONS

DATE	REVISION	DATE	RECOMMENDED	DATE	APPROVED

NOTE:
THE 2000 EDITION OF THE LOUISIANA D.O.T.D. STANDARD SPECIFICATIONS FOR ROADS AND BRIDGES, AS AMENDED BY THE PROJECT SPECIFICATIONS, SHALL GOVERN ON THIS PROJECT

TYPE OF CONSTRUCTION:
ROADWAY SURFACE REPLACEMENT
ROADWAY CONCRETE TEST SECTION INSTALLATION
EXPANSION JOINT E2 REPAIRS
EXPANSION JOINT E1 REPLACEMENT

LENGTH OF PROJECT

DESCRIPTION	ALGEBRAIC SUM OF ALL EQUATIONS	GROSS LENGTH	EXCEPTION	BRIDGE LENGTH		ROADWAY LENGTH	
STA. TO STA. I-310 ℄:	Ft.	Ft.	Ft.	Feet	Miles	Feet	Miles
241+80 to 269+25				2,745	0.520		
TOTAL LENGTH OF BRIDGE				2,745	0.520		
TOTAL LENGTH OF ROADWAY							
TOTAL MILES					.520		

2/25/04

SHEET NUMBER 1
ST. CHARLES | 4503(509) | 450-37-0020
PARISH | FEDERAL PROJECT | STATE PROJECT
MH BT | BKH MH | 12-11-02 NOTED
DESIGNED CHECKED | DETAILED CHECKED | DATE SCALE
NO. | DATE | REVISION DESCRIPTION | BY

MISSISSIPPI RIVER BRIDGE (LULING)
DECK TEST SECTION
AND JOINT REPAIRS
TITLE SHEET
AND LAYOUT MAP

HUVAL & ASSOCIATES, INC.
Consulting Engineers

Z:\HUVAL Projects\3154 (Luling)\CORE DWGS\revised 1-8-04\001\Title.dwg, Layout1, 02/25/2004 01:13:29 PM

SUMMARY OF ESTIMATED QUANTITIES

PAY ITEM	713-01	727-01	731-02	732-02-A	732-03-A	S-101	S-102	S-103 **	S-104 **	S-105 **	S-106 **	S-107	S-108	S-109	S-110 **	S-111	S-112	S-113
LOCATION OR DESCRIPTION	TEMPORARY SIGNS AND BARRICADES	MOBILIZATION	REFLECTORIZED RAISED PAVEMENT MARKERS	PLASTIC PAVEMENT STRIPING (SOLID LINE 4" WIDE)	PLASTIC PAVEMENT STRIPING (BROKEN LINE 4" WIDE)	CONSTRUCTION LAYOUT	ASPHALT PAVEMENT REMOVAL (STA. 265+53 TO 269+25 SOUTHBOUND)	PMAC DENSE GRADED HOT MIX ASPHALT (STA. 265+53 TO 269+25 SOUTHBOUND)	EPOXY UNDERLAYMENT SYSTEM (TYPE "A")	EPOXY UNDERLAYMENT SYSTEM (TYPE "B")	STEEL FIBER REINFORCED CONCRETE	(ITEM NOT USED BY THIS PROJECT)	SAW CUT & SEAL PMAC	ASPHALT PAVEMENT REMOVAL (GENERAL OPEN ROADWAYS)	PMAC DENSE GRADED HOT MIX ASPHALT (GENERAL OPEN ROADWAYS)	REPAIR E2 EXPANSION JOINT (STA. 269+25)	REPLACE E1 S.B. EXPANSION JOINT (STA. 241+80)	REPLACE E1 N.B. EXPANSION JOINT (STA. 241+80)
UNIT OF PAY	LUMP	LUMP	EACH	MILE	MILE	LUMP	SQ. YD.	TON	SQ. FT.	SQ. FT.	CU. YD.		LIN. FT.	SQ. YD.	SQ. YD.	LUMP	LUMP	LUMP
TOTAL QUANTITY	LUMP	LUMP	160	1.110	0.070	LUMP	1,581	131.8	7,986	4,330	82.22		4,846	60	60	LUMP	LUMP	LUMP

** THE SPECIAL PROVISIONS WILL SPECIFY THE FINAL MIX/FORMULATION/SPECIFICATIONS TO BE USED.

GENERAL NOTES
(SEE SPECIAL PROVISIONS FOR ADDITIONAL DETAILS & INFORMATION)

PROJECT SCOPE

THIS PROJECT CONSISTS OF WORK TO BE PERFORMED ON THE I-310 LULING BRIDGE OVER THE MISSISSIPPI RIVER NORTH OF NEW ORLEANS, LOUISIANA. THE FOLLOWING ARE THE MAJOR WORK EFFORTS OF THE PROJECT:

1- REMOVE EXISTING ASPHALTIC PAVEMENT AND CLEAN THE STEEL DECK PLATE AREA.
2- INSTALL POLYMER MODIFIED ASPHALTIC CONCRETE (PMAC) PAVEMENT.
3- SURFACE PREPARE AND INSTALL EPOXY UNDERLAYMENT SYSTEMS.
4- INSTALL STEEL FIBER REINFORCED CONCRETE (SFRC) TEST SECTIONS.
5- PROVIDE SAW CUT AND SEAL IN PMAC SECTIONS.
6- REPAIR EXISTING BRIDGE END EXPANSION JOINTS (EAST BANK).
7- REMOVE & REPLACE EXISTING EXPANSION JOINTS (WEST BANK).

ITEM S-102 ASPHALT PAVEMENT REMOVAL (STA 265+53 TO 269+25 SOUTHBOUND)

EXISTING ASPHALT PAVEMENT IN THE SOUTHBOUND ROADWAY FROM NORTH BRIDGE END AT STA. 265+53 TO STA. 269+25 IS TO BE COMPLETELY REMOVED FULL ROADWAY DECK WIDTH (38'-3"). FINAL DECK CLEANING WILL BE BY ULTRA HIGH PRESSURE (>20,000PSI) POTABLE WATER WASHING & RECOVERY TO REMOVE THE FINAL TRACES OF ASPHALTIC TACK COAT AND PAVEMENT MATERIAL. EXISTING BOLT HEADS DAMAGED BY THE ASPHALT REMOVAL OPERATION OR BOLTS FOUND MISSING OR DAMAGED WILL BE REPLACED UNDER THIS PAY ITEM.

ITEM S-103 PMAC DENSE GRADED HOT MIX ASPHALT

POLYMER MODIFIED ASPHALTIC CONCRETE (PMAC) DENSE GRADED HOT MIX ASPHALT WILL BE SUPPLIED AND INSTALLED PER THE LOCATIONS AND DIMENSIONS IN THE PLANS AND ACCORDING TO THE SPECIFICATIONS. PMAC INSTALLED UNDER PAY ITEM S-103 IN THE FULL ROADWAY WIDTH TRAFFIC LANES FROM STA. 265+53 TO STA. 266+03 WILL BE INSTALLED IN A MINIMUM OF TWO EQUAL LIFTS. PMAC INSTALLED UNDER PAY ITEM S-103 IN THE INSIDE AND OUTSIDE SHOULDER AREAS MAY BE INSTALLED AS ONE TOTAL REQUIRED THICKNESS LIFT AT CONTRACTOR'S OPTION. MINIMUM ACCEPTABLE FINAL INSTALLED PMAC DENSITY WILL BE 92% OF THE AVERAGE THEORETICAL MAXIMUM DENSITY FOR EITHER INSTALLATION METHOD USED/ALLOWED.

ITEM S-104 EPOXY UNDERLAYMENT SYSTEM (TYPE "A")

TYPE "A" EPOXY UNDERLAYMENT SYSTEM IS DEFINED AS A FIVE LAYER COMPLETE EPOXY UNDERLAYMENT SYSTEM CONSISTING OF A SHOT BLASTED STEEL DECK PLATE SURFACE PREPARATION FOLLOWED BY AN EPOXY COATING FOLLOWED BY A LAYER OF GLASS FABRIC FOLLOWED BY AN EPOXY LAYER FOLLOWED BY A SPRINKLING OF GRANITE CHIPS FOLLOWED BY A FINAL COATING OF EPOXY. THIS SYSTEM IS PLANNED TO BE INSTALLED UNDER THE SFRC TEST SECTIONS LIMITED TO BETWEEN THE EXISTING LONGITUDINAL DECK SPLICE PLATES WHERE THE NEW SFRC TEST SECTION WILL BE PLACED AND ONLY FROM STA. 266+03 TO STA. 269+25.

ITEM S-105 EPOXY UNDERLAYMENT SYSTEM (TYPE "B")

TYPE "B" EPOXY UNDERLAYMENT SYSTEM IS DEFINED AS AN EPOXY UNDERLAYMENT SYSTEM CONSISTING OF A SHOT BLASTED STEEL DECK PLATE SURFACE PREPARATION FOLLOWED BY AN EPOXY COATING FOLLOWED BY A SPRINKLING OF GRANITE CHIPS FOLLOWED BY A FINAL COATING OF EPOXY. THIS SYSTEM IS PRIMARILY PLANNED TO BE INSTALLED OVER THE EXISTING LONGITUDINAL AND TRANSVERSE DECK SPLICE PLATES AND THE STEEL DECK AREAS OUTSIDE THE EXISTING LONGITUDINAL DECK SPLICE PLATES IN THE SHOULDER AREAS WHERE NEW PMAC WILL BE PLACED AND ONLY FROM STA. 266+03 TO STA. 269+25.

ITEM S-109 ASPHALT PAVEMENT REMOVAL (GENERAL OPEN ROADWAYS)

EXISTING ASPHALT PAVEMENT IN THE SOUTHBOUND AND NORTHBOUND ROADWAYS IS TO BE COMPLETELY REMOVED AND THE DECK STEEL PLATE CLEANED AT THE LOCATIONS AND PER THE MINIMUM DIMENSIONS SET OUT IN THE PLANS AND/OR AS MAY BE DIRECTED BY ENGINEER. AT CONTRACTOR'S OPTION, FINAL DECK CLEANING OF THESE REPAIR AREAS WILL BE BY ALLOWED MECHANICAL MEANS OR BY ULTRA HIGH PRESSURE (>20,000PSI) POTABLE WATER WASHING & RECOVERY TO REMOVE THE FINAL TRACES OF ASPHALTIC TACK COAT AND PAVEMENT MATERIAL. DEGREE OF CLEANLINESS OR ASPHALTIC REMOVAL – FOR THIS PAY ITEM ONLY (IF MECHANICAL CLEANING UTILIZED) – WILL BE COMPLETE REMOVAL OF ALL LOOSE AND/OR UNBOUNDED ASPHALTIC TACK COAT OR PAVEMENT MATERIAL, AND ANY SECURELY BONDED ASPHALTIC PAVEMENT OVER 1/2" THICK. EXISTING BOLT HEADS DAMAGED BY THE ASPHALT REMOVAL OPERATION OR BOLTS FOUND MISSING OR DAMAGED WILL BE REPLACED UNDER THIS PAY ITEM.

ITEM S-110 PMAC DENSE GRADED HOT MIX ASPHALT

POLYMER MODIFIED ASPHALTIC CONCRETE (PMAC) DENSE GRADED HOT MIX ASPHALT WILL BE SUPPLIED AND INSTALLED PER THE LOCATIONS AND DIMENSIONS IN THE PLANS AND ACCORDING TO THE SPECIFICATIONS. PMAC INSTALLED UNDER PAY ITEM S-110 WILL BE INSTALLED IN A MINIMUM OF TWO EQUAL LIFTS FOR PMAC INSTALLED IN REPAIR AREAS GREATER THAN TEN FEET IN WIDTH AND LONGER THAN TWENTY FEET IN LENGTH – 200 SQUARE FEET. AT CONTRACTOR'S OPTION, REPAIR AREAS LESS THAN TWENTY SQUARE YARDS MAY BE PLACED IN A SINGLE LIFT. ALL PLACED PMAC IN REPAIR AREAS WILL HAVE PLACEMENT THICKNESS THAT MATCH PERIMETER ADJACENT EDGES AND BE UNIFORM IN TOTAL PLACEMENT AND TIE-IN THICKNESS. MINIMUM ACCEPTABLE FINAL INSTALLED PMAC DENSITY WILL BE 92% OF THE AVERAGE THEORETICAL MAXIMUM DENSITY FOR EITHER INSTALLATION METHOD USED/ALLOWED.

ITEM S-111 REPAIR E2 EXPANSION JOINT (STA 269+25)

EXISTING EXPANSION JOINTS E2 IN THE SOUTHBOUND AND NORTHBOUND ROADWAYS ARE TO BE REFURBISHED PER THE PLANS AND SPECIFICATIONS WITH REPLACEMENT PIECES AND COMPONENTS SUPPLIED BY THE ORIGINAL MANUFACTURER WATSON-BOWMAN. WORK ON THIS PAY ITEM MAY BE SCHEDULED AT ANY TIME DURING THE ALLOWED CONTRACT TIME AND INDEPENDENT OR COINCIDENT TO PLANNED SOUTHBOUND OR NORTHBOUND ROADWAY WORK. MOST REPAIR WORK CAN BE EXECUTED FROM THE DECK UNDERSIDE. HOWEVER, CONTRACTOR MAY MONOPOLIZE ON ALLOWED LANE AND/OR ROADWAY CLOSURES TO EXECUTE OR COMPLETE SOME OF THIS REPAIR WORK FROM ABOVE THE DECK PROVIDED THIS DECK PRESENCE IS WITHIN THE CLOSURE ALLOWANCES FOR THE SFRC OR E1 WORK.

NO SPECIFIC, SPECIAL, OR EXTRA ROADWAY LANE OR TOTAL ROADWAY CLOSURES ARE PLANNED OR BEING ALLOWED FOR ANY E2 EXPANSION JOINT REPAIRS. ANY SUCH REPAIR EFFORT REQUIRING SUCH CLOSURES MUST BE SCHEDULED BY CONTRACTOR COINCIDENT WITH THE CLOSURE ALLOWANCES BEING ALLOWED FOR SOUTHBOUND SFRC OR NORTHBOUND E1 WORK.

LUMP SUM WORK AND SUPPLY SCOPE IS DELINEATED IN THE PLANS FOR EACH JOINT – NORTHBOUND & SOUTHBOUND.

GENERAL REPAIR WORK ITEMS CONSIST OF:

1- REPLACING RAIL CONTROL SPRINGS & DOWELS.
2- RE-POSITIONING/ROTATING COMPRESSION SPRINGS.
3- RE-POSITIONING/ROTATING/REPLACING BEARINGS.
4- REATTACHING STAINLESS STEEL SLIDE PLATES.
5- RE-POSITIONING/REPLACING JOINT SEALS.

GENERAL NOTE – EXPANSION JOINT WORK UNDER S-111, S-112, & S-113

PARTIAL PAYMENT FOR THESE LUMP SUM ITEMS ALLOCATED BETWEEN INSIDE AND OUTSIDE LANE COMPLETED REPLACEMENT WORK OR NORTHBOUND AND SOUTHBOUND REPAIR WORK WILL BE BASED ON PRORATED NOMINAL INSTALLED LENGTHS & SEALS FOR E1 WORK (SEE SPECIAL PROVISIONS) AND SPLIT 50%/50% FOR E2 WORK.

ITEM S-112 REPLACE E1 S. B. EXPANSION JOINT (STA 241+80)

EXISTING JOINT IS TO BE REMOVED, THE RECEIVING AREA OF BRIDGE END AND APPROACH IS TO BE MODIFIED, AND A WATSON-BOWMAN MAURER TYPE EXPANSION JOINT SUPPLIED AND INSTALLED. SOUTHBOUND LANE AND ROADWAY CLOSURES REQUIRED BY THIS WORK ITEM WILL BE SCHEDULED COINCIDENT WITH THAT ALLOWED FOR THE SFRC INSIDE LANE WORK WITH LANE CLOSURE TRAFFIC DELINEATORS EXTENDING FULL BRIDGE LENGTH INTO THE E1 WORK ZONE AS AN EXTENSION OF THE LANE CLOSURE TRAFFIC CONTROLS INSTALLED FOR THE SFRC WORK. ADDITIONALLY, TEMPORARY CONCRETE BARRIERS WILL BE PLACED ON THE ROADWAY DECK TO PROVIDE THE NECESSARY SAFETY PROTECTION FOR WORKERS AND THE TRAVELING PUBLIC OUT TO THE TEMPORARY OPEN DECK AREA REQUIRED BY THE WORK. NO TRAFFIC LANE SHIFTS WILL BE ALLOWED ON THE BRIDGE.

REMOVAL AND REPLACEMENT OF SOUTHBOUND E1 WILL REQUIRE THE TEMPORARY REMOVAL OF THE MEDIAN BARRIER PLATE THAT WILL EXPOSE THE NORTHBOUND INSIDE LANE MEDIAN BARRIER FRAMEWORK. UNLESS CONTRACTOR ELECTS TO EXECUTE THE NORTHBOUND INSIDE LANE E1 WORK COINCIDENT TO THIS E1 SOUTHBOUND INSIDE LANE WORK, CONTRACTOR WILL HAVE TO SUBMIT FOR REVIEW AND APPROVAL AND PROVIDE FOR THE TEMPORARY COVERING/CLOSURE OF THE NORTHBOUND SIDE OF THE MEDIAN BARRIER COVER PLATE REMOVAL. NO TRAFFIC WILL BE ALLOWED IN A LANE ADJACENT TO A DISCONTINUOUS STEEL BARRIER – SEE SPECIAL PROVISIONS FOR ALLOWANCE DETAILS, TIMING, DURATION, ETC.....

CONTRACTOR WILL BE ALLOWED TO INSTALL OPEN JOINT ASSEMBLIES (NO SEALS) AND ALLOWED TO PLACE TRAFFIC ON CURED AND ACCEPTABLE OPEN JOINT INSTALLATIONS PENDING THE FINAL INSTALLATION OF THE CONTINUOUS NEOPRENE STRIP SEALS.

ITEM S-113 REPLACE E1 N. B. EXPANSION JOINT (STA 241+80)

EXISTING JOINT IS TO BE REMOVED, THE RECEIVING AREA OF BRIDGE END AND APPROACH IS TO BE MODIFIED, AND A WATSON-BOWMAN MAURER TYPE EXPANSION JOINT SUPPLIED AND INSTALLED. NORTHBOUND LANE CLOSURES REQUIRED BY THIS WORK ITEM CAN BE SCHEDULED AT ANY TIME WITHIN THE CONTRACT TIME. TEMPORARY CONCRETE BARRIERS WILL BE PLACED ON THE ROADWAY DECK IN THE E1 WORK ZONE TO PROVIDE THE NECESSARY SAFETY PROTECTION FOR WORKERS AND THE TRAVELING PUBLIC DUE TO THE TEMPORARY OPEN DECK AREA REQUIRED BY THE WORK. PMAC AREA REPAIR WORK AND ANY ABOVE DECK WORK REQUIRED FOR E2 REPAIRS WILL BE PLANNED AND SCHEDULED COINCIDENT WITH THAT ALLOWED FOR E1 WORK WITH LANE CLOSURE TRAFFIC DELINEATORS EXTENDING FULL BRIDGE LENGTH INTO THE PMAC OR E2 WORK ZONE AS AN EXTENSION OF THE LANE CLOSURE TRAFFIC CONTROLS INSTALLED FOR THE E1 WORK. NO TRAFFIC LANE SHIFTS OR DISCONTINUOUS TRAFFIC DELINEATORS WILL BE ALLOWED ON THE BRIDGE – SEE SPECIAL PROVISIONS FOR ALLOWANCE DETAILS, TIMING, DURATION, ETC.....

CONTRACTOR WILL BE ALLOWED TO INSTALL OPEN JOINT ASSEMBLIES (NO SEALS) AND ALLOWED TO PLACE TRAFFIC ON CURED AND ACCEPTABLE OPEN JOINT INSTALLATIONS PENDING THE FINAL INSTALLATION OF THE CONTINUOUS NEOPRENE STRIP SEALS.

WORK SEQUENCE AND LANE CLOSURE ALLOWANCES

SOUTHBOUND:

THE PROJECT WILL ALLOW LANE CLOSURES AND TRAFFIC FLOW ALTERATIONS FOR WORK IN/ON THE SOUTHBOUND ROADWAY ASSOCIATED ONLY WITH THE INSTALLATION OF THE SFRC CONCRETE TEST SECTIONS. IT IS THE INTENT OF THESE PLANS AND SPECIFICATIONS THAT THE CONTRACTOR PLAN AND SCHEDULE ANY OTHER REQUIRED SOUTHBOUND ROADWAY WORK THAT WOULD NORMALLY ALSO REQUIRE TRAFFIC FLOW DISRUPTIONS TO COINCIDE WITH THE ALLOWED TRAFFIC DISRUPTIONS ASSOCIATED WITH THE INSTALLATION OF THE CONCRETE TEST SECTIONS. ADDITIONAL SOUTHBOUND ROADWAY WORK SUCH AS AREA PMAC REPAIRS, SAW CUTTING AND SEALING, PAVEMENT MARKINGS, WORK ASSOCIATED WITH THE REPAIRS TO THE E2 EXPANSION JOINT, WORK ASSOCIATED WITH THE REPLACEMENT OF THE E1 JOINT, AND ANY OTHER SOUTHBOUND ROADWAY WORK REQUIRED MUST BE PLANNED AND SCHEDULED ACCORDINGLY – NO OTHER SEPARATE LANE CLOSURES WILL BE ALLOWED.

TWENTY-EIGHT (28) CALENDAR DAYS OF SINGLE LANE CLOSURES WILL BE ALLOWED FOR THE CONCRETE TEST SECTION WORK IN THE SOUTHBOUND ROADWAY. THE FIRST POTION OF THIS ALLOWED ONE LANE CLOSURE AND TRAFFIC DIVERSION PERIOD WILL BE FOR CONSTRUCTION IN THE SOUTHBOUND INSIDE LANE WITH THE LAST PORTION FOR CONSTRUCTION IN THE SOUTHBOUND OUTSIDE LANE.

THE PROJECT WILL ALSO ALLOW TWO FULL CLOSURES OF THE SOUTHBOUND ROADWAY INTENDED FOR THE ACTUAL PLACEMENT/INSTALLATION OF THE STEEL FIBER REINFORCED CONCRETE – ONE CLOSURE FOR EACH LANE WORK EFFORT. CONTRACTOR WILL BE ABLE TO SCHEDULE THESE FULL ROADWAY CLOSURE ALLOWANCES WITHIN THE PERIODS ALLOWED BY THE SPECIAL PROVISIONS FOR ROADWAY CLOSURES – SEE SPECIAL PROVISIONS FOR ALLOWANCE DETAILS, TIMING, DURATION, ETC.....

NORTHBOUND

TWENTY (20) CALENDAR DAYS OF SINGLE LANE CLOSURES WILL BE ALLOWED FOR E1 REPLACEMENT WORK IN THE NORTHBOUND ROADWAY AND MAY BE SCHEDULED COINCIDENT, INDEPENDENT, AND/OR SEPARATE FROM THE ALLOWED TRAFFIC CLOSURES IN THE SOUTHBOUND ROADWAY. ROADWAY PMAC REPAIR WORK AND ANY ABOVE DECK WORK REQUIREMENTS ASSOCIATED WITH THE NORTHBOUND E2 REPAIRS MUST BE SCHEDULED TO COINCIDE WITH THE ALLOWED E1 LANE CLOSURES – SEE SPECIAL PROVISIONS FOR ALLOWANCE DETAILS, TIMING, DURATION, ETC.....

E2 EXPANSION JOINT REPAIRS

WORK ON THIS PAY ITEM MAY BE SCHEDULED AT ANY TIME DURING THE ALLOWED CONTRACT TIME AND INDEPENDENT OR COINCIDENT TO ANY PLANNED SOUTHBOUND OR NORTHBOUND ROADWAY WORK. NO SPECIFIC, SPECIAL, OR EXTRA ROADWAY LANE OR TOTAL ROADWAY CLOSURES ARE PLANNED OR BEING ALLOWED FOR ANY E2 EXPANSION JOINT REPAIRS. ANY SUCH REPAIR EFFORT REQUIRING SUCH CLOSURES MUST BE SCHEDULED BY CONTRACTOR COINCIDENT WITH THE CLOSURE ALLOWANCES BEING ALLOWED FOR SOUTHBOUND SFRC AND/OR NORTHBOUND E1 WORK. CLOSURES OF THE NORTHBOUND OUTSIDE SHOULDER DURING THE DAYLIGHT ARE ALLOWED FOR WORKER ACCESS TO THE E2 DECK UNDERSIDE AREA. HOWEVER SUCH SHOULDER CLOSURES ARE NOT ALLOWED AT NIGHT OR COINCIDENT WITH A NORTHBOUND INSIDE LANE CLOSURE PRECIPITATED BY E1 INSIDE LANE WORK.

TRAFFIC CONTROL & CLEAR ACCESS

DUE TO THE SMALL VOLUMES OF PMAC REQUIRED TO REPAIR THE NORTHBOUND OPEN ROADWAY AREAS, THAT WORK MIGHT BEST BE PLANNED TO COINCIDE WITH THE PRODUCTION AND DELIVERY OF PMAC REQUIRED FOR EITHER OF THE SOUTHBOUND LANES. CONSTRUCTION MATERIAL OR EQUIPMENT WILL NOT BE LEFT UNATTENDED OR ALLOWED TO REMAIN ON THE NORTHBOUND ROADWAY BEYOND THE E1 WORK ZONE WHEN WORKERS ARE NOT PRESENT IN THE NORTHBOUND ROADWAY WORK AREA. CERTAIN TEMPORARY TRAFFIC CONTROL DEVICES FOR THIS EXTENSION OF THE NORTHBOUND LANE CLOSURE FOR PMAC WORK, WITH PRIOR APPROVAL FROM THE ENGINEER, MAY BE ALLOWED TO REMAIN "STORED" ON THE OUTSIDE SHOULDER FOR A LIMITED PRE-APPROVED TIME.

THE PROJECT WILL ALSO ALLOW UP TO A MAXIMUM OF FOUR (4) FIFTEEN (15) MINUTE TEMPORARY FULL ROADWAY CLOSURES FOR REPOSITIONING/DEPLOYING TRAFFIC CONTROL DEVICES TO PROVIDE A SHIFT IN THE TRAFFIC FLOW PATTERN IN EACH OF THE SOUTHBOUND OR NORTHBOUND ROADWAYS WITH SUCH SHIFTS OCCURRING AHEAD OF E2 IN THE SOUTHBOUND ROADWAY AND E1 IN THE NORTHBOUND ROADWAY AND SUCH TEMPORARY CLOSURES EXECUTED UNDER POLICE PRESENCE AND CONTROL – SEE SPECIAL PROVISIONS FOR ALLOWANCE DETAILS, TIMING, DURATION, ETC.....

ALL COSTS ASSOCIATED WITH POLICE PRESENCE OR REQUIREMENTS FOR THIS PROJECT EITHER AS SO NOTED IN THESE PLANS AND SPECIFICATIONS OR AS SO REQUIRED BY CONTRACTORS EXECUTION PLANS AND SCHEDULE WILL BE INCLUDED IN AND PROVIDED FOR UNDER ITEM 713-01 TEMPORARY SIGNS AND BARRICADES. THERE WILL BE NO ADDITIONAL COMPENSATION SPECIFICALLY FOR ANY POLICE PROJECT PRESENCE OR COVERAGE.

Daniel P. Huval
2/25/04

SHEET NUMBER 3
PARISH: ST. CHARLES
FEDERAL PROJECT: 4503(509)
STATE PROJECT: 450-37-0020
DESIGNED: MH
CHECKED: DT
DETAILED: TS
CHECKED: MH
DATE: 12-11-02
SCALE: N.T.S.
NO. DATE REVISION DESCRIPTION BY

MISSISSIPPI RIVER BRIDGE (LULING)
DECK TEST SECTION
AND JOINT REPAIRS

GENERAL NOTES, TYPICAL SECTION AND SUMMARY OF ESTIMATED QUANTITIES

HUVAL & ASSOCIATES, INC.
Consulting Engineers

K:\HUVAL Projects\01st Luling\CORE DWGS\revised 1-8-04\003\GENERAL NOTES.dwg, dwg, Model, 02/25/2004 10:08:21 AM

NOTE: ALL CLOSURE SIGNS SHALL BE PLACED IN PAIRS AT THE DESIGNATED LOCATIONS WITH ONE SIGN ALONG THE OUTSIDE SHOULDER AND ONE SIGN ALONG THE MEDIAN SHOULDER. SIGNS TO BE COVERED OR REMOVED WHEN NORTHBOUND LANES ARE NOT CLOSED.

2/25/04

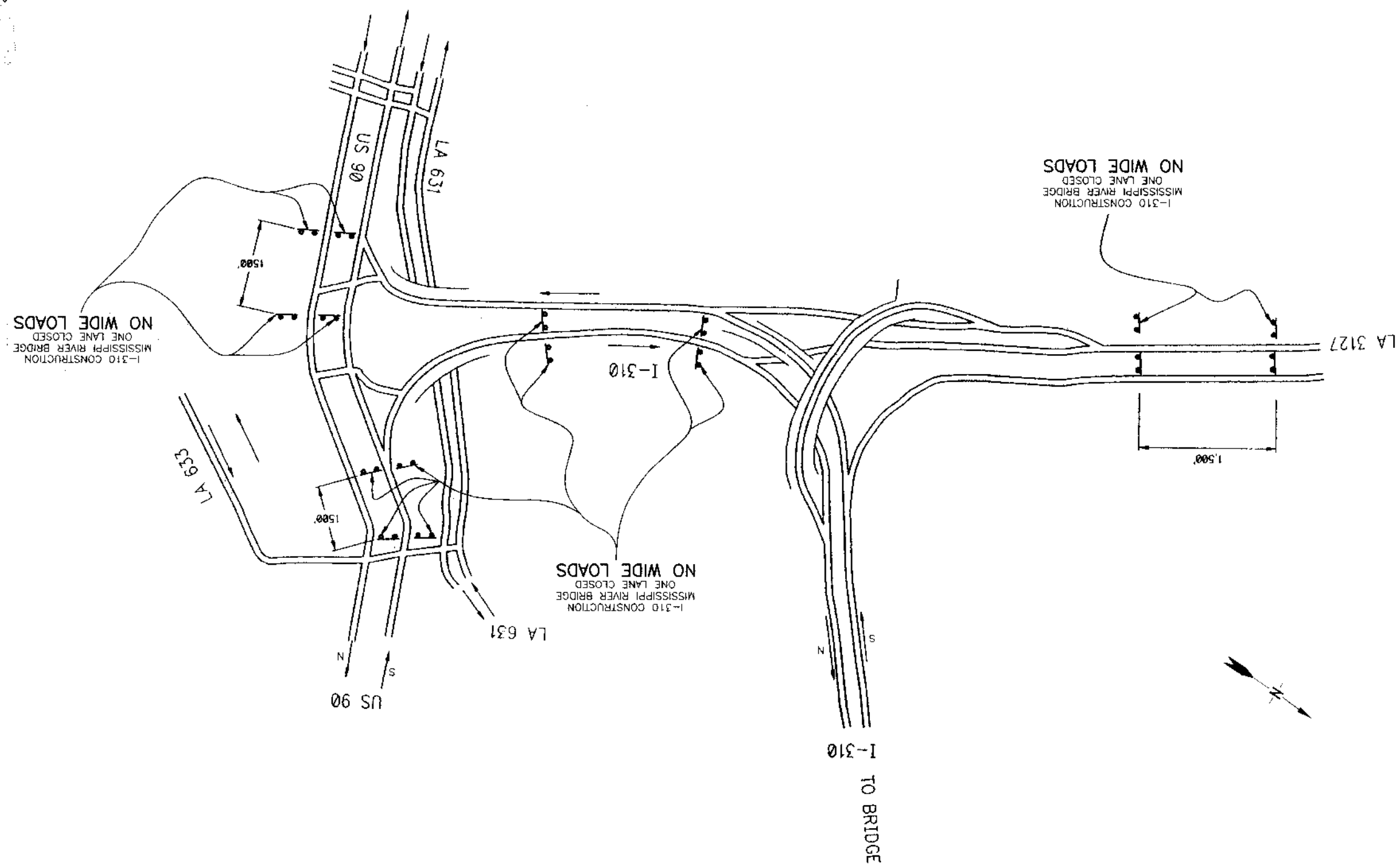

MISSISSIPPI RIVER BRIDGE (LULING)
DECK TEST SECTION
AND JOINT REPAIRS
MINIMUM CONSTRUCTION SIGNING
I-310 & U.S. 90 NORTHBOUND

HUVAL
& ASSOCIATES INC.
Consulting Engineers

NO.	DATE	REVISION DESCRIPTION	BY

DESIGNED	WH	PARISH	ST CHARLES
CHECKED	DT		
DETAILED	TB	FEDERAL PROJECT	450(369)
CHECKED	MH		
DATE	12-11-02	STATE PROJECT	450-17-0020
SCALE	N.T.S.		

SHEET NUMBER 4

X:\HUVAL Projects\3134 (LuMg)\CORE DWGS\Vendel 1-8-04\90NORTHBOUND.dwg, Layout1, 02/25/2004 10:09:19 AM

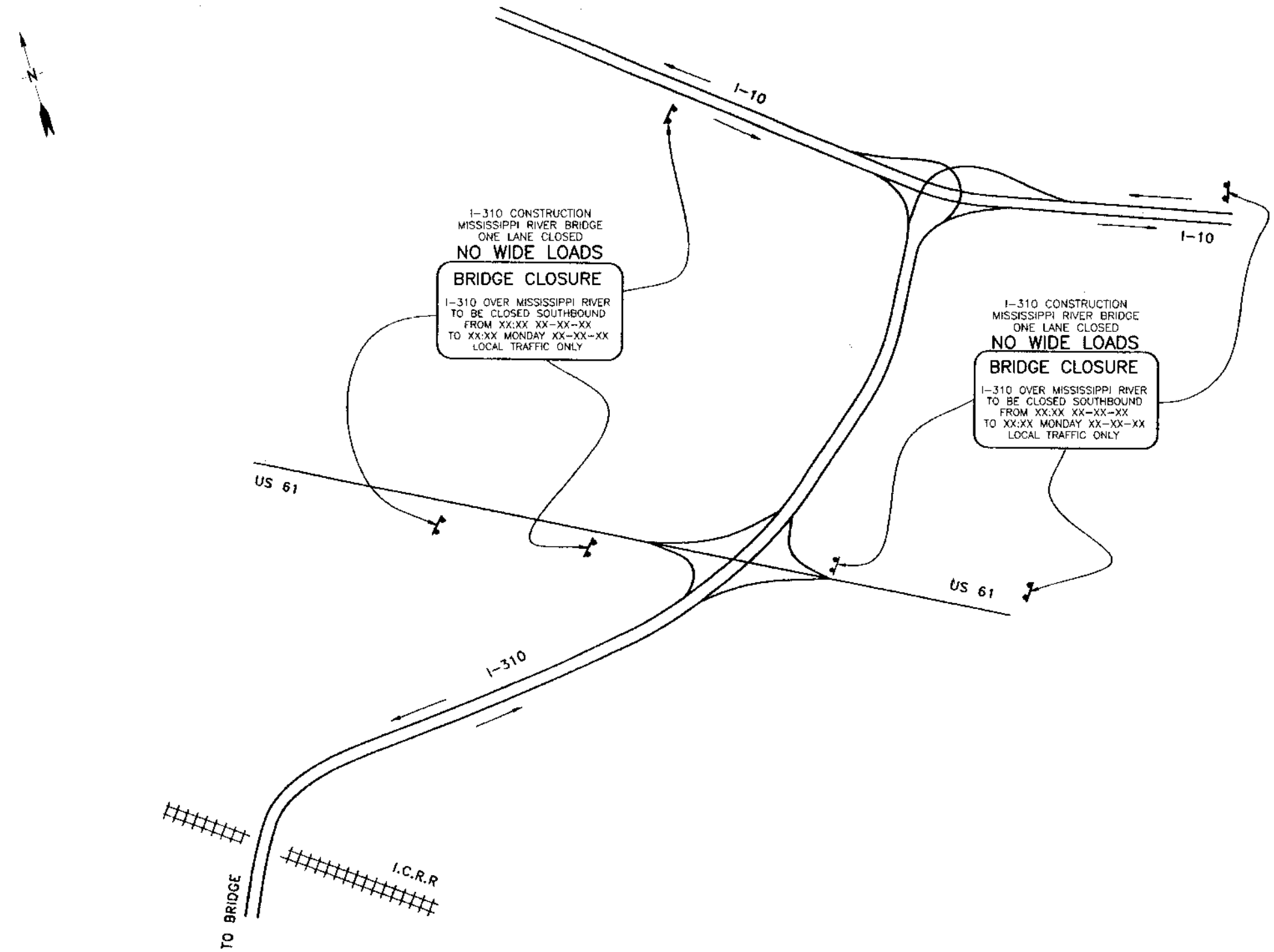

2/25/04

SHEET NUMBER	5
PARISH	ST CHARLES
FEDERAL PROJECT	450-3(509)
STATE PROJECT	450-37-0020
DESIGNED / CHECKED	MH / ST
DETAILED / CHECKED	TB / MH
DATE / SCALE	12-11-02 / N.T.S.

NO.	DATE	REVISION DESCRIPTION	BY

MISSISSIPPI RIVER BRIDGE (LULING)
DECK TEST SECTION
AND JOINT REPAIR

MINUMUM CONSTRUCTION SIGNING
I-310 & I-10/U.S. 61 SOUTHBOUND

HUVAL & ASSOCIATES, INC.
Consulting Engineers

X:\HUVAL Projects\3154 (Luling)\CORE DWGS\revised 1-5-04\06\SOUTHBOUND.dwg, Layout1, 02/25/2004 10:10:05 AM

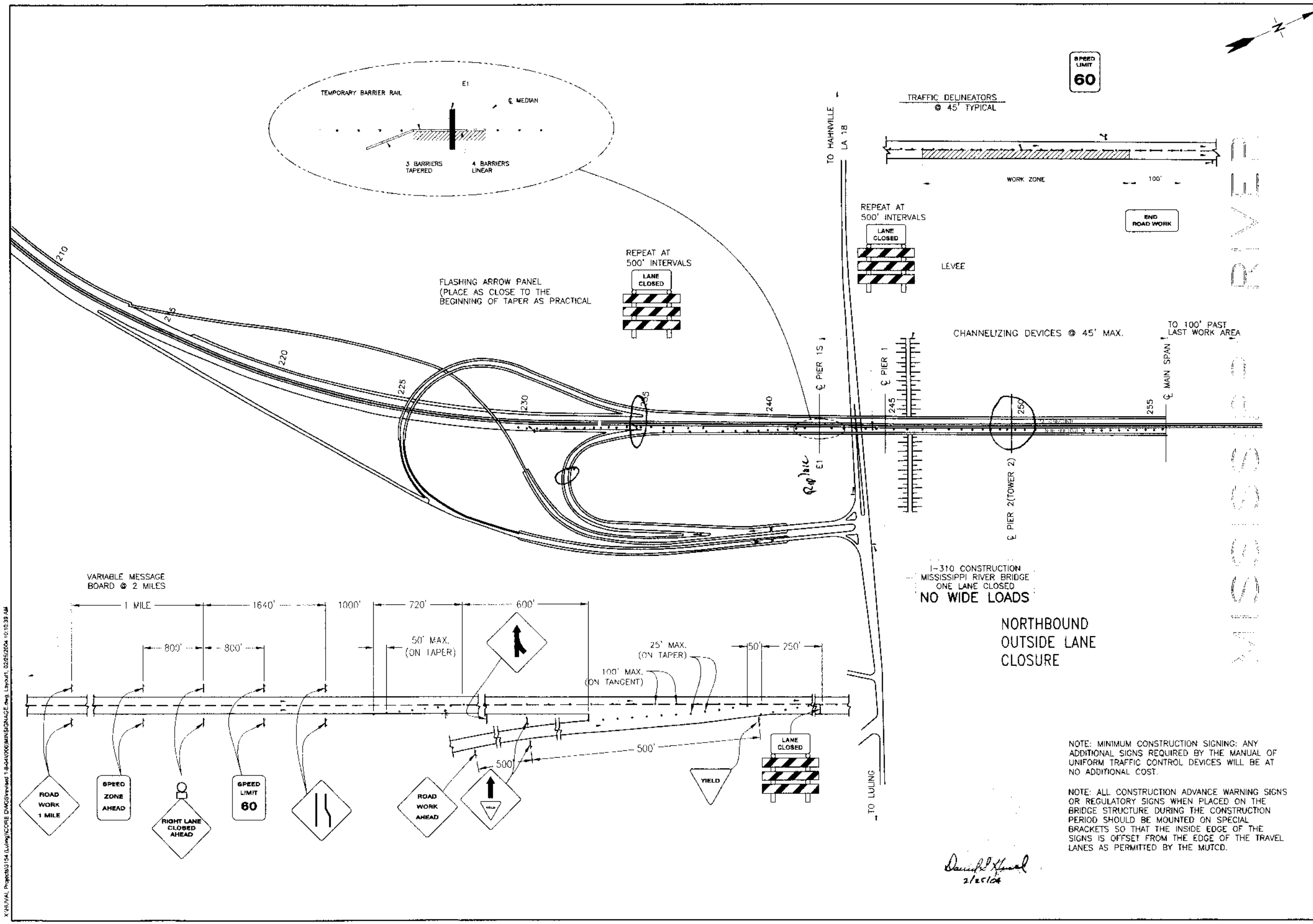
TEMPORARY BARRIER RAIL
E1
℄ MEDIAN
3 BARRIERS TAPERED
4 BARRIERS LINEAR
SPEED LIMIT 60
TRAFFIC DELINEATORS @ 45' TYPICAL
WORK ZONE
100'
END ROAD WORK
TO HAHNVILLE LA 18
REPEAT AT 500' INTERVALS
LANE CLOSED
LEVEE
REPEAT AT 500' INTERVALS
LANE CLOSED
FLASHING ARROW PANEL (PLACE AS CLOSE TO THE BEGINNING OF TAPER AS PRACTICAL
CHANNELIZING DEVICES @ 45' MAX.
TO 100' PAST LAST WORK AREA
210
215
220
225
230
235
240
245
250
255
℄ PIER 1S
℄ PIER 1
℄ PIER 2(TOWER 2)
℄ MAIN SPAN
E1
VARIABLE MESSAGE BOARD @ 2 MILES
1 MILE
1640'
1000'
720'
600'
800'
800'
50' MAX. (ON TAPER)
25' MAX. (ON TAPER)
100' MAX. (ON TANGENT)
50'
250'
500'
500'
ROAD WORK 1 MILE
SPEED ZONE AHEAD
RIGHT LANE CLOSED AHEAD
SPEED LIMIT 60
ROAD WORK AHEAD
YIELD
LANE CLOSED
TO LULING
I-310 CONSTRUCTION
MISSISSIPPI RIVER BRIDGE
ONE LANE CLOSED
NO WIDE LOADS
NORTHBOUND
OUTSIDE LANE
CLOSURE
NOTE: MINIMUM CONSTRUCTION SIGNING: ANY ADDITIONAL SIGNS REQUIRED BY THE MANUAL OF UNIFORM TRAFFIC CONTROL DEVICES WILL BE AT NO ADDITIONAL COST.
NOTE: ALL CONSTRUCTION ADVANCE WARNING SIGNS OR REGULATORY SIGNS WHEN PLACED ON THE BRIDGE STRUCTURE DURING THE CONSTRUCTION PERIOD SHOULD BE MOUNTED ON SPECIAL BRACKETS SO THAT THE INSIDE EDGE OF THE SIGNS IS OFFSET FROM THE EDGE OF THE TRAVEL LANES AS PERMITTED BY THE MUTCD.
2/25/04
SHEET NUMBER 6
ST. CHARLES
PARISH
4503(509)
FEDERAL PROJECT
450-37-0020
STATE PROJECT
MJH
DT
DESIGNED
CHECKED
TB
MJH
DETAILED
CHECKED
12-11-02
N.T.S.
DATE
SCALE
NO.
DATE
REVISION DESCRIPTION
MISSISSIPPI RIVER BRIDGE (LULING)
DECK TEST SECTION
AND JOINT REPAIRS
SUGGESTED MIN. CONSTRUCTION SIGNING
NORTHBOUND OUTSIDE LANE CLOSURE
HUVAL
& ASSOCIATES, INC.
Consulting Engineers

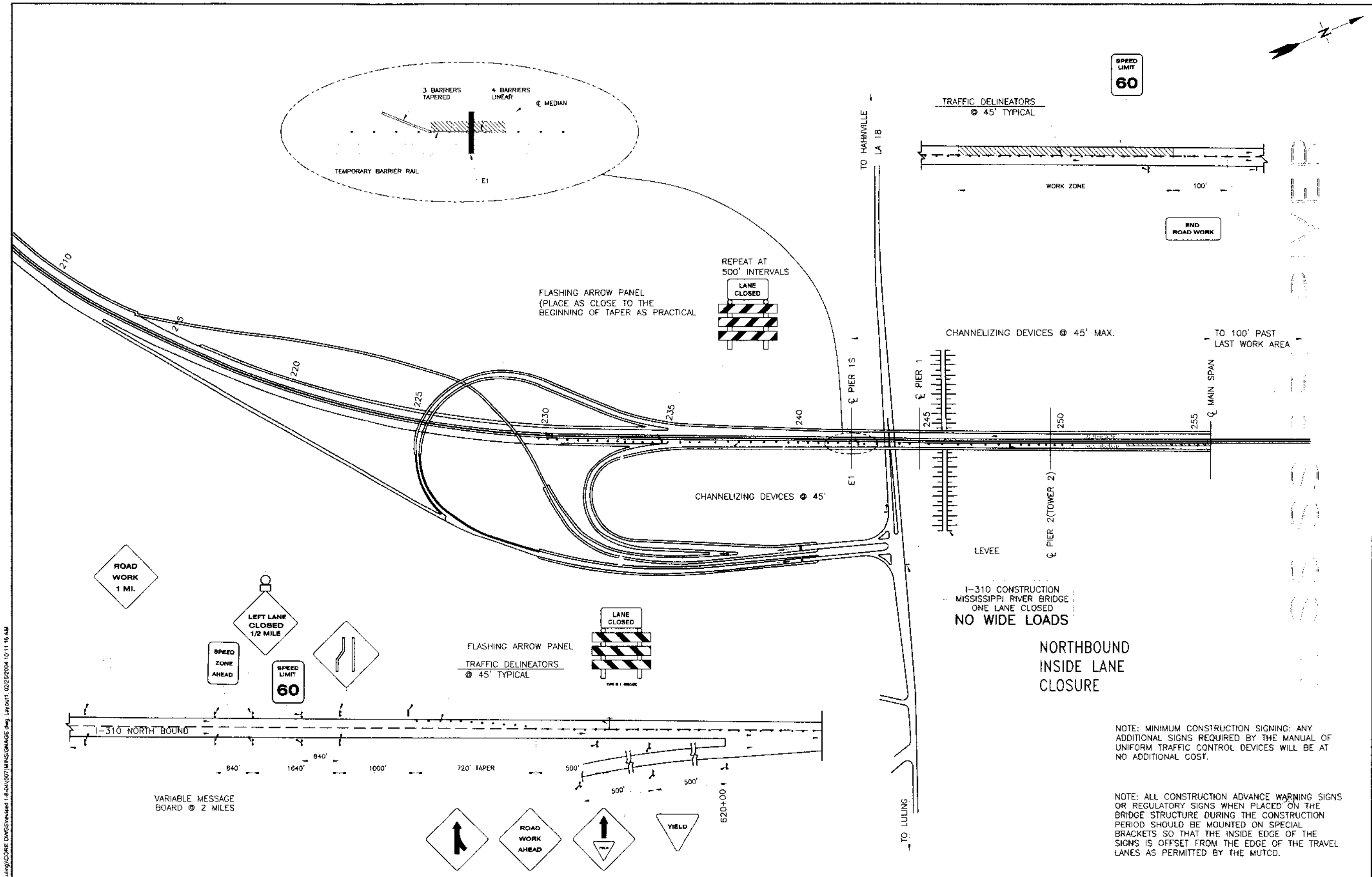

NOTE: MINIMUM CONSTRUCTION SIGNING: ANY ADDITIONAL SIGNS REQUIRED BY THE MANUAL OF UNIFORM TRAFFIC CONTROL DEVICES WILL BE AT NO ADDITIONAL COST.

NOTE: ALL CONSTRUCTION ADVANCE WARNING SIGNS OR REGULATORY SIGNS WHEN PLACED ON THE BRIDGE STRUCTURE DURING THE CONSTRUCTION PERIOD SHOULD BE MOUNTED ON SPECIAL BRACKETS SO THAT THE INSIDE EDGE OF THE SIGNS IS OFFSET FROM THE EDGE OF THE TRAVEL LANES AS PERMITTED BY THE MUTCD.

MINIMUM CLOSURE SIGNING

Daniel K Huval
2/25/04

SHEET NUMBER	7
PARISH	ST. CHARLES
FEDERAL PROJECT	4503(509)
STATE PROJECT	450-37-0020
DESIGNED / CHECKED	MH / DT
DETAILED / CHECKED	TB / MH
DATE / SCALE	12-11-02 / N.T.S.

NO.	DATE	DESIGN DESCRIPTION	BY

MISSISSIPPI RIVER BRIDGE (LULING)
DECK TEST SECTION
AND JOINT REPAIRS

SUGGESTED MIN. CONSTRUCTION SIGNING
NORTHBOUND INSIDE LANE CLOSURE

HUVAL & ASSOCIATES, INC.
Consulting Engineers

X:\HUVAL Projects\3154 (Luling)\CORE DWGS\revised 1-8-04\007 MINSIGNAGE.dwg Layout1 02/25/2004 10:11:16 AM

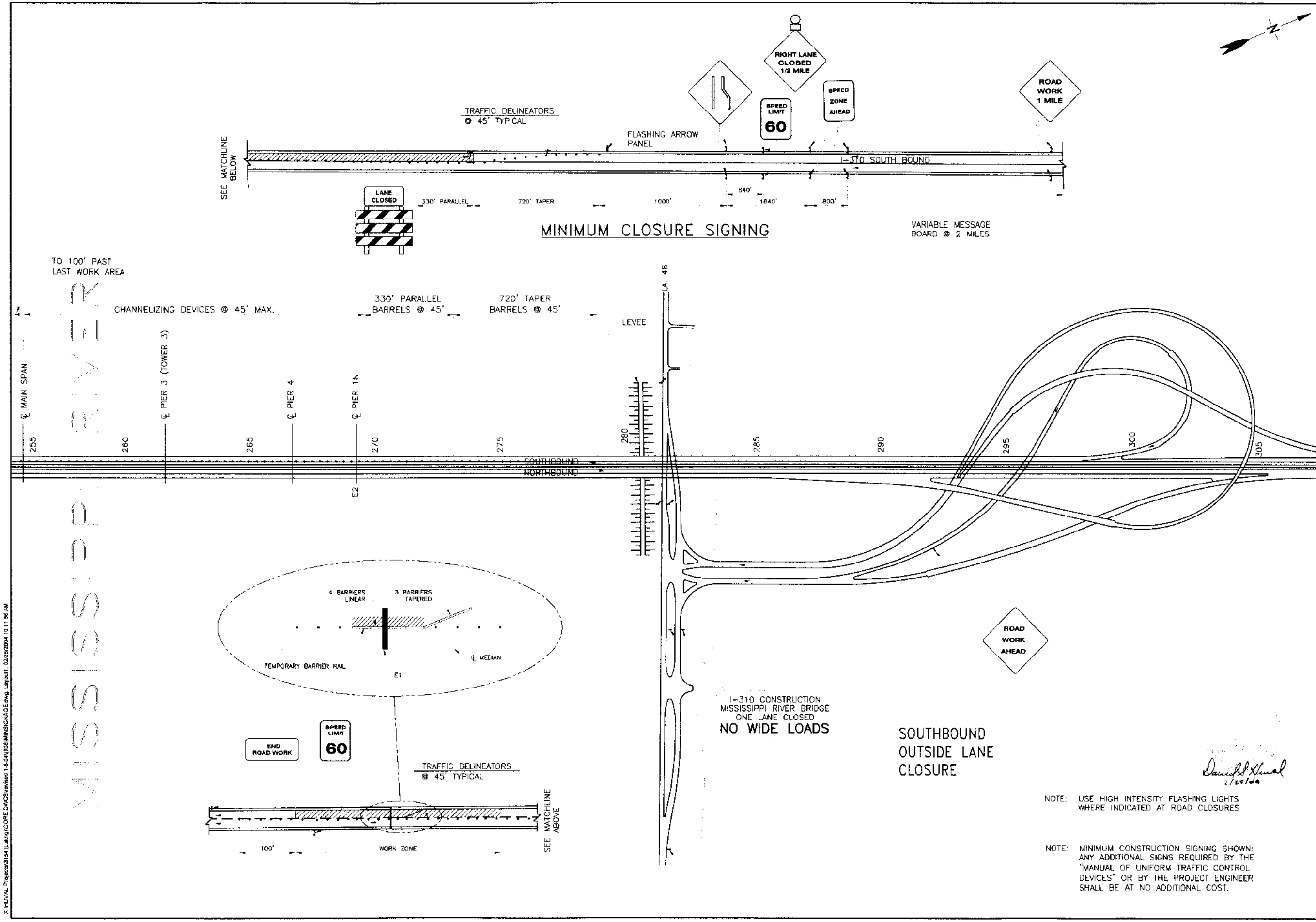
RIGHT LANE CLOSED 1/2 MILE
SPEED LIMIT 60
SPEED ZONE AHEAD
ROAD WORK 1 MILE
TRAFFIC DELINEATORS @ 45' TYPICAL
FLASHING ARROW PANEL
SEE MATCHLINE BELOW
I-310 SOUTH BOUND
LANE CLOSED
330' PARALLEL
720' TAPER
1000'
840'
1840'
800'
MINIMUM CLOSURE SIGNING
VARIABLE MESSAGE BOARD @ 2 MILES
TO 100' PAST LAST WORK AREA
CHANNELIZING DEVICES @ 45' MAX.
330' PARALLEL BARRELS @ 45'
720' TAPER BARRELS @ 45'
LA. 48
LEVEE
℄ MAIN SPAN
℄ PIER 3 (TOWER 3)
℄ PIER 4
℄ PIER 1N
255
260
265
270
275
280
285
290
295
300
305
SOUTHBOUND
NORTHBOUND
E2
MISSISSIPPI RIVER
4 BARRIERS LINEAR
3 BARRIERS TAPERED
TEMPORARY BARRIER RAIL
℄ MEDIAN
E1
END ROAD WORK
SPEED LIMIT 60
TRAFFIC DELINEATORS @ 45' TYPICAL
SEE MATCHLINE ABOVE
100'
WORK ZONE
ROAD WORK AHEAD
I-310 CONSTRUCTION
MISSISSIPPI RIVER BRIDGE
ONE LANE CLOSED
NO WIDE LOADS
SOUTHBOUND
OUTSIDE LANE
CLOSURE
NOTE: USE HIGH INTENSITY FLASHING LIGHTS WHERE INDICATED AT ROAD CLOSURES
NOTE: MINIMUM CONSTRUCTION SIGNING SHOWN: ANY ADDITIONAL SIGNS REQUIRED BY THE "MANUAL OF UNIFORM TRAFFIC CONTROL DEVICES" OR BY THE PROJECT ENGINEER SHALL BE AT NO ADDITIONAL COST.
SHEET NUMBER 8
ST CHARLES
PARISH
4503(509)
FEDERAL PROJECT
450-37-0020
STATE PROJECT
DESIGNED AHH
CHECKED BT
DETAILED TB
CHECKED MH
DATE 12-11-02
SCALE N.T.S.
REVISION DESCRIPTION
DATE
NO.
BY
MISSISSIPPI RIVER BRIDGE (LULING)
DECK TEST SECTION
AND JOINT REPAIRS
SUGGESTED MIN. CONSTRUCTION SIGNING
SOUTHBOUND OUTSIDE LANE CLOSURE
HUVAL & ASSOCIATES, INC.
Consulting Engineers

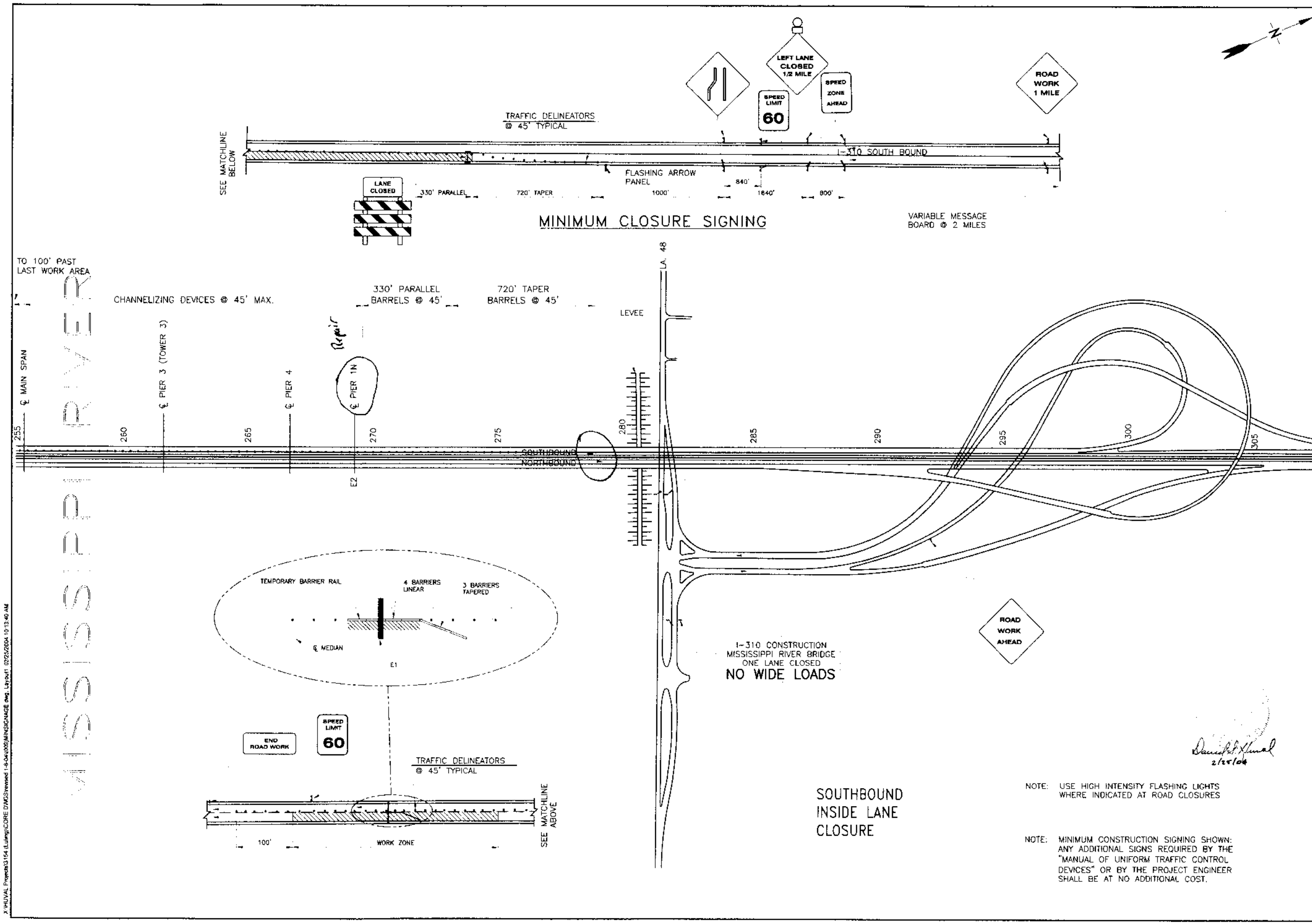
LEFT LANE CLOSED 1/2 MILE
SPEED LIMIT 60
SPEED ZONE AHEAD
ROAD WORK 1 MILE
TRAFFIC DELINEATORS @ 45' TYPICAL
SEE MATCHLINE BELOW
I-310 SOUTH BOUND
FLASHING ARROW PANEL
LANE CLOSED
330' PARALLEL
720' TAPER
1000'
840'
1640'
800'
MINIMUM CLOSURE SIGNING
VARIABLE MESSAGE BOARD @ 2 MILES
TO 100' PAST LAST WORK AREA
CHANNELIZING DEVICES @ 45' MAX.
330' PARALLEL BARRELS @ 45'
720' TAPER BARRELS @ 45'
LEVEE
LA. 48
℄ MAIN SPAN
℄ PIER 3 (TOWER 3)
℄ PIER 4
℄ PIER 1N
Repair
255
260
265
270
275
280
285
290
295
300
305
E2
SOUTHBOUND
NORTHBOUND
MISSISSIPPI RIVER
TEMPORARY BARRIER RAIL
4 BARRIERS LINEAR
3 BARRIERS TAPERED
℄ MEDIAN
E1
END ROAD WORK
SPEED LIMIT 60
TRAFFIC DELINEATORS @ 45' TYPICAL
100'
WORK ZONE
SEE MATCHLINE ABOVE
I-310 CONSTRUCTION
MISSISSIPPI RIVER BRIDGE
ONE LANE CLOSED
NO WIDE LOADS
ROAD WORK AHEAD
SOUTHBOUND INSIDE LANE CLOSURE
NOTE: USE HIGH INTENSITY FLASHING LIGHTS WHERE INDICATED AT ROAD CLOSURES
NOTE: MINIMUM CONSTRUCTION SIGNING SHOWN: ANY ADDITIONAL SIGNS REQUIRED BY THE "MANUAL OF UNIFORM TRAFFIC CONTROL DEVICES" OR BY THE PROJECT ENGINEER SHALL BE AT NO ADDITIONAL COST.
2/25/04
SHEET NUMBER 9
PARISH ST. CHARLES
FEDERAL PROJECT 4503(509)
STATE PROJECT 450-37-0020
DESIGNED MR
CHECKED DT
DETAILED TB
CHECKED MH
DATE 12-11-02
SCALE N.T.S.
REVISION DESCRIPTION
DATE
BY
NO.
MISSISSIPPI RIVER BRIDGE (LULING)
DECK TEST SECTION AND JOINT REPAIRS
SUGGESTED MIN. CONSTRUCTION SIGNING SOUTHBOUND INSIDE LANE CLOSURE
HUVAL & ASSOCIATES, INC.
Consulting Engineers

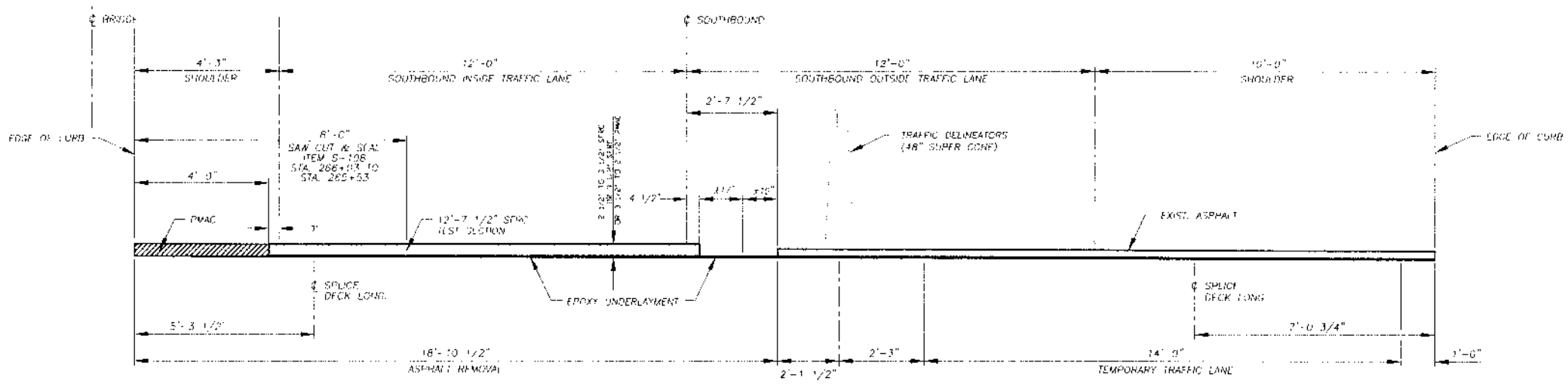

TRANSVERSE SECTION
(INSIDE LANE CONSTRUCTION)
N.T.S.

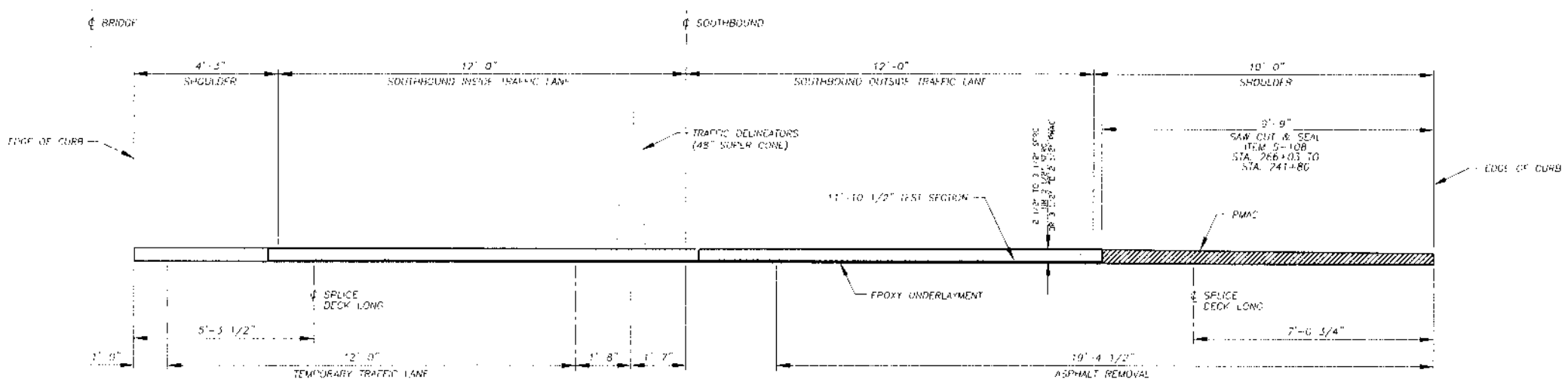

TRANSVERSE SECTION
(OUTSIDE LANE CONSTRUCTION)
N.T.S.

NOTE:

DEPLOY TRAFFIC DELINEATORS MINIMUM 100' PAST LAST WORK AREA

Daniel A. Huval
2/25/04

SHEET NUMBER	10
PARISH	ST. CHARLES
FEDERAL PROJECT	4503(509)
STATE PROJECT	450-37-0020
DESIGNED / CHECKED	MH / ST
DETAILED / CHECKED	TB / MH
DATE / SCALE	12-11-02 / N.T.S.

NO.	DATE	REVISION DESCRIPTION	BY

MISSISSIPPI RIVER BRIDGE (LULING)
DECK TEST SECTION
AND JOINT REPAIRS

CONSTRUCTION TRAFFIC LAYOUT
TEST SECTION WORK

HUVAL & ASSOCIATES, INC.
Consulting Engineers

X:\HUVAL Projects\3154 (Luling)\CORE DWGS\revised 1-8-04\010\TRAFFICLAYOUT.dwg Model 02/25/2004 10:15:01 AM

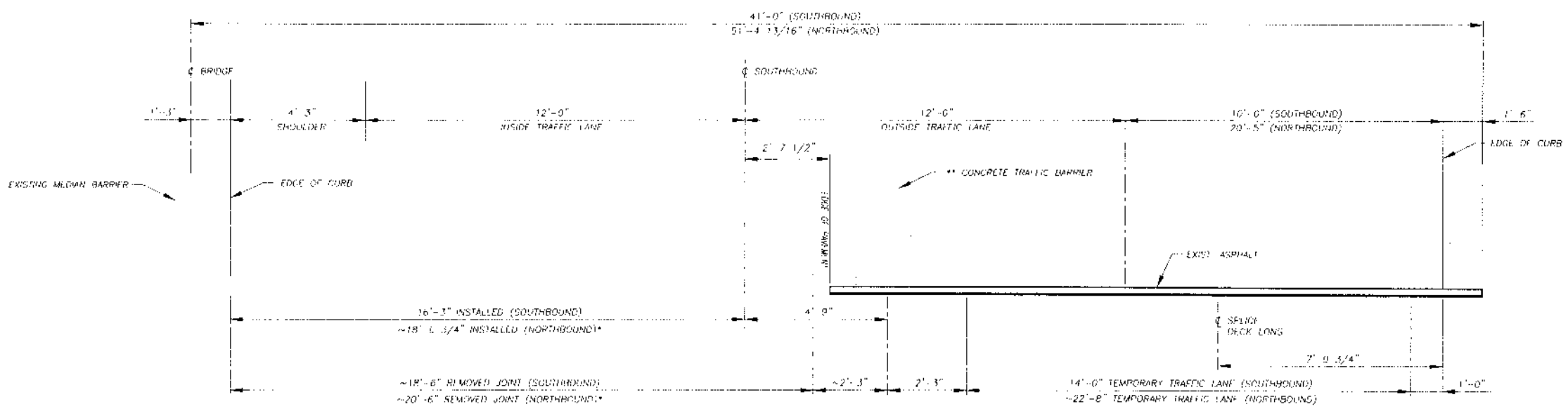

TRANSVERSE SECTION
(INSIDE LANE CONSTRUCTION)
(SOUTHBOUND SHOWN, NORTHBOUND SIMILAR AND OPPOSITE HAND)
N.T.S.

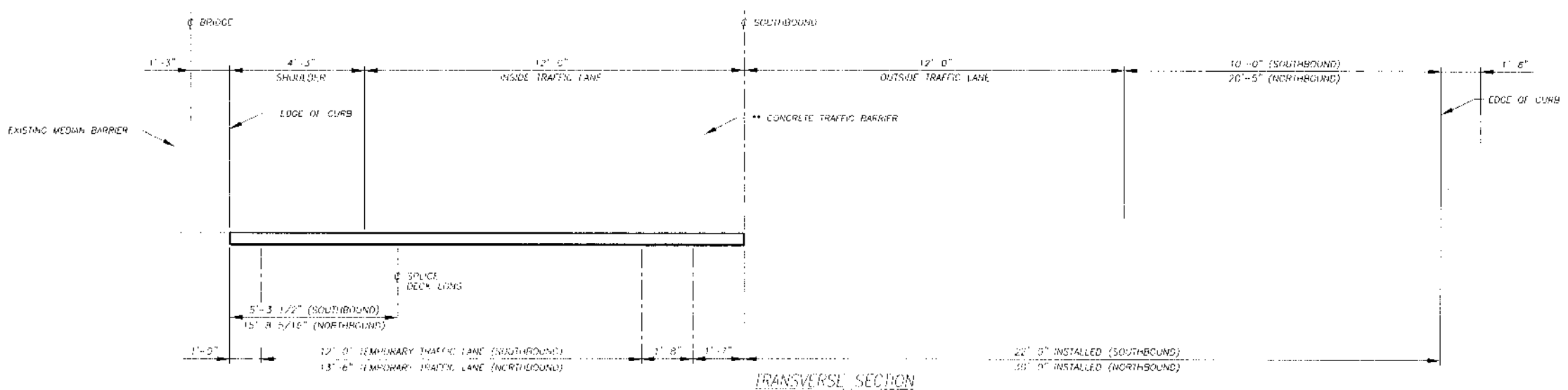

TRANSVERSE SECTION
(OUTSIDE LANE CONSTRUCTION)
(SOUTHBOUND SHOWN, NORTHBOUND SIMILAR AND OPPOSITE HAND)
N.T.S.

NOTES:

** MINIMUM FOUR (4) CONCRETE BARRIERS ALONG DIVIDE AND THREE (3) FOR INLET TAPPER. DEPLOY CONE TYPE TRAFFIC DELINEATORS INTO BARRIER TAPPER AND MINIMUM 150' PAST LAST WORK AREA.

CONCRETE BARRIERS & TRAFFIC DELINEATORS NOT MEASURED FOR PAY. INCLUDED AS PART OF ITEM 713-51.

* PHASING AND RAN SPLICE FISH PLATES TO CONSIDER OPEN DECK ROADWAY AND REMOVAL LENGTHS

2/25/04

SHEET NUMBER	11
PARISH	ST CHARLES
FEDERAL PROJECT	4503(509)
STATE PROJECT	450-37-0020
DESIGNED / CHECKED	MN / DT
DETAILED / CHECKED	TB / MH
DATE / SCALE	12-11-02 / N.T.S.

NO.	DATE	REVISION DESCRIPTION	BY

MISSISSIPPI RIVER BRIDGE (LULING)
DECK TEST SECTION
AND JOINT REPAIRS

CONSTRUCTION TRAFFIC LAYOUT
E1 JOINT REPLACEMENT WORK

HUVAL & ASSOCIATES, INC.
Consulting Engineers

X:\HUVAL Projects\03154 (Luling)\CORE DWGS\revised 1-8-04\01\11TRAFFICLAYOUT.dwg Model 02/25/2004 10:15:35 AM

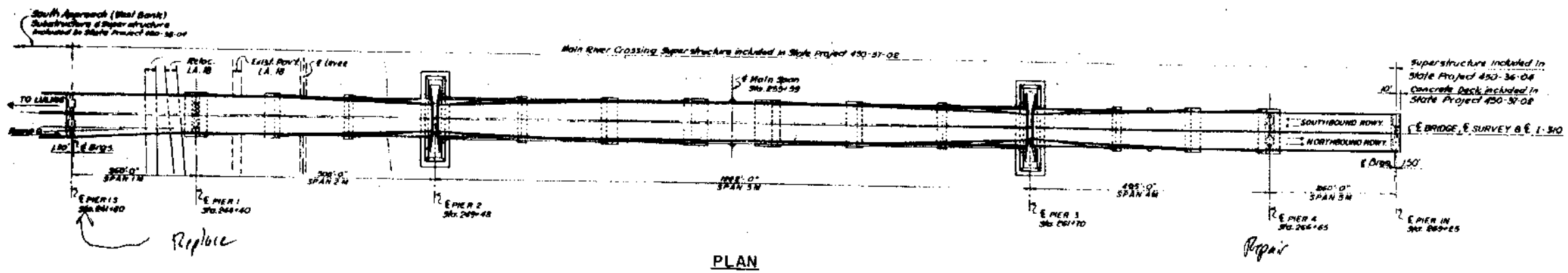

PLAN

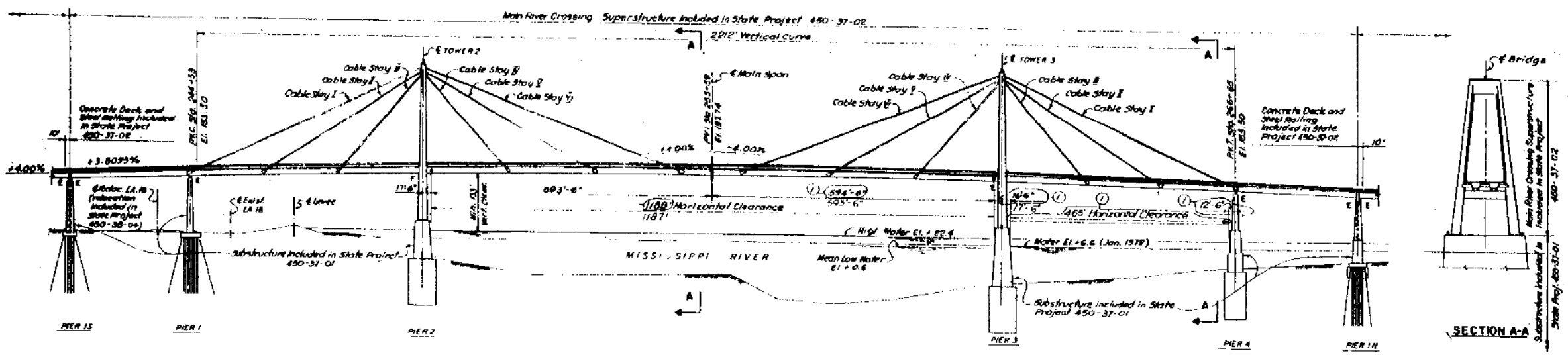

ELEVATION

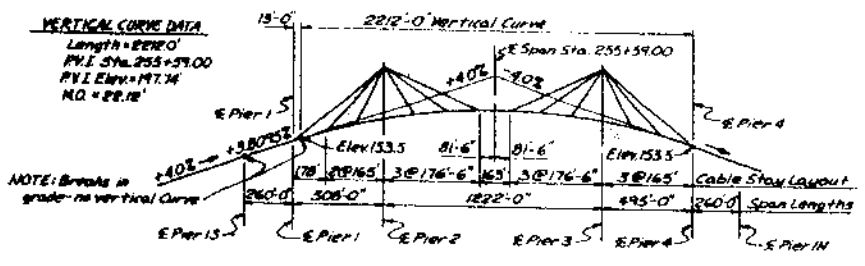

VERTICAL ALIGNMENT

FOR INFORMATIONAL PURPOSES ONLY

2/25/04

SHEET NUMBER	12
PARISH	ST. CHARLES
FEDERAL PROJECT	450X(509)
STATE PROJECT	450-37-0020
DRAWN	JJT
DESIGNED	TB
CHECKED	MH
DETAILED	
CHECKED	
DATE	12-11-02
SCALE	N.T.S.

REVISION DESCRIPTION | BY | DATE | NO.

MISSISSIPPI RIVER BRIDGE (LULING)
DECK TEST SECTION
AND JOINT REPAIRS

KEY GENERAL PLAN AND ELEVATION

HUVAL & ASSOCIATES, INC. Consulting Engineers

X:\HUVAL Projects\3154 (Luling)\CORE DWGS\revised 1-8-04\012\BRIDGEREF.dwg, Layout1, 02/25/2004 10:17:59 AM

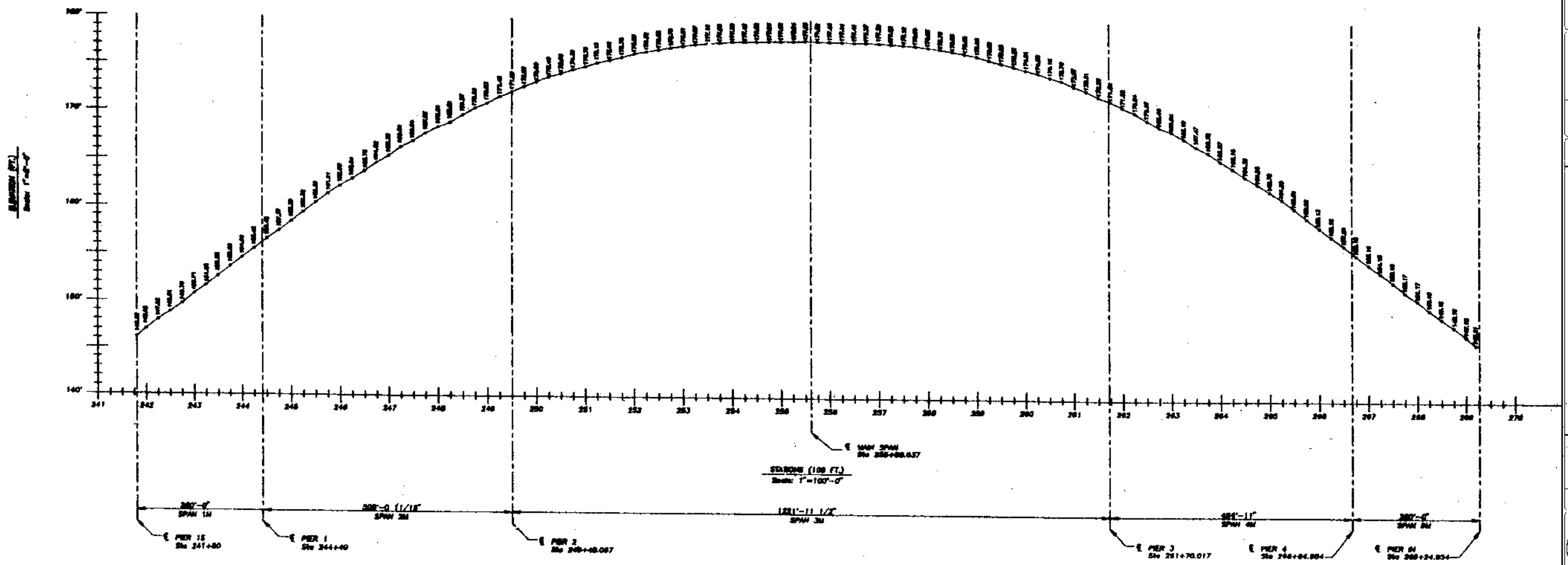

LULING BRIDGE PROFILE

FOR INFORMATIONAL PURPOSES ONLY

SHEET NUMBER	13
PARISH	ST. CHARLES
FEDERAL PROJECT	450X(509)
STATE PROJECT	450-37-0020
DESIGNED / CHECKED	MH / DT
DETAILED / CHECKED	TB / MH
DATE / SCALE	12-11-02 / N.T.S.

REVISION DESCRIPTION

MISSISSIPPI RIVER BRIDGE (LULING)
DECK TEST SECTION
AND JOINT REPAIRS

LULING BRIDGE PROFILE

HUVAL & ASSOCIATES, INC.
Consulting Engineers

X:\HUVAL Projects\3154 Luling\CORE CWS\Sheets 1-8-04\013\BRIDGEPROFILE.dwg Layout: 02/25/2004 10:19:10 AM

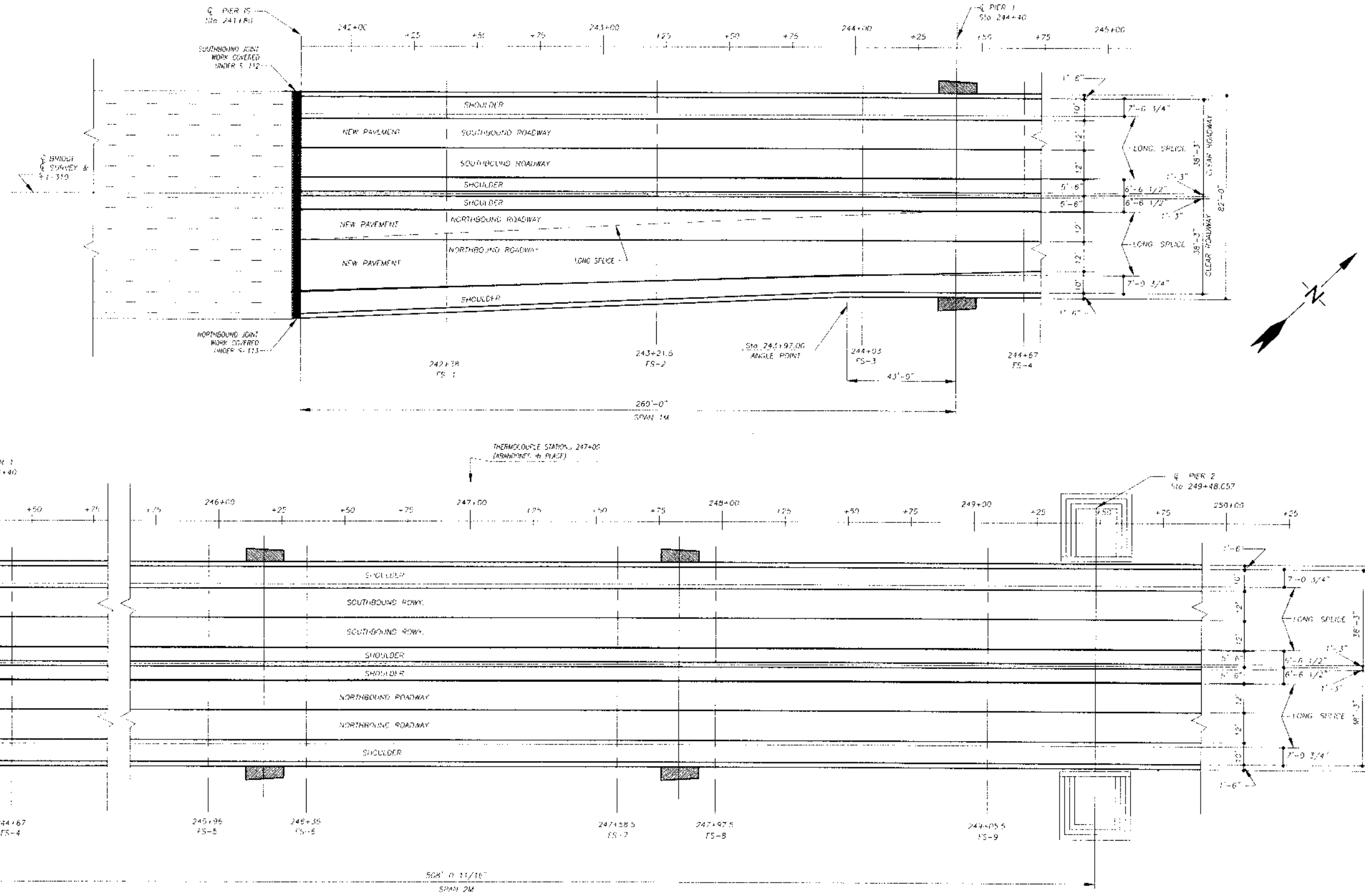

NOTE A: EXACT LOCATIONS/DIMENSIONS OF LONGITUDINAL & TRANSVERSE DECK SPLICE BOLTS AVAILABLE IN ORIGINAL BRIDGE CONSTRUCTION PLANS.(IF REQUIRED)

FS - DENOTES TRANSVERSE FIELD SPLICE

Daniel J. Huval
2/26/04

SHEET NUMBER	14
PARISH	ST. CHARLES
FEDERAL PROJECT	4503(509)
STATE PROJECT	450-37-0020
DESIGNED / CHECKED	MH / DT
DETAILED / CHECKED	TB / MH
DATE / SCALE	12-11-02 / N.S.

REVISION DESCRIPTION | NO. | DATE

MISSISSIPPI RIVER BRIDGE (LULING)
DECK TEST SECTION
AND JOINT REPAIRS

SPAN 1M AND PLAN LAYOUT

HUVAL & ASSOCIATES, INC.
Consulting Engineers

X:\HUVAL Projects\3154 (Luling)\CORE DWGS\revised 1-8-04\014-SPAN2M.dwg, Model 02/25/2004 10:19:43 AM

DENOTES APPROXIMATE CRACK AREAS TO BE REPAIRED UNDER ITEMS S-105 & S-110
EXACT LOCATIONS & EXTENTS TO BE MARKED BY ENGINEER

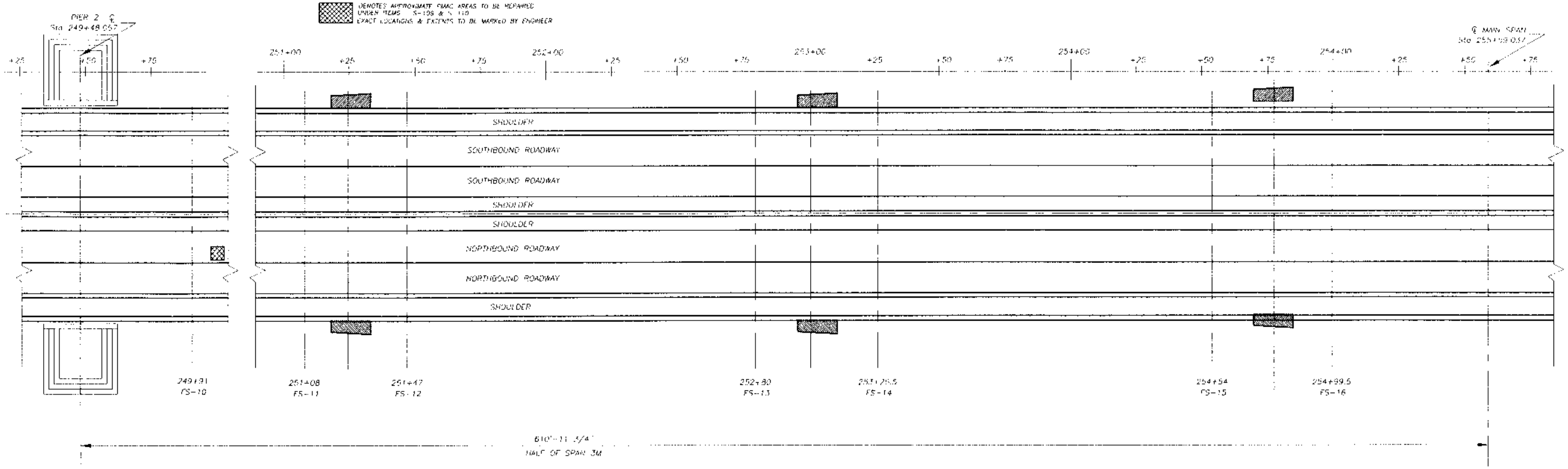

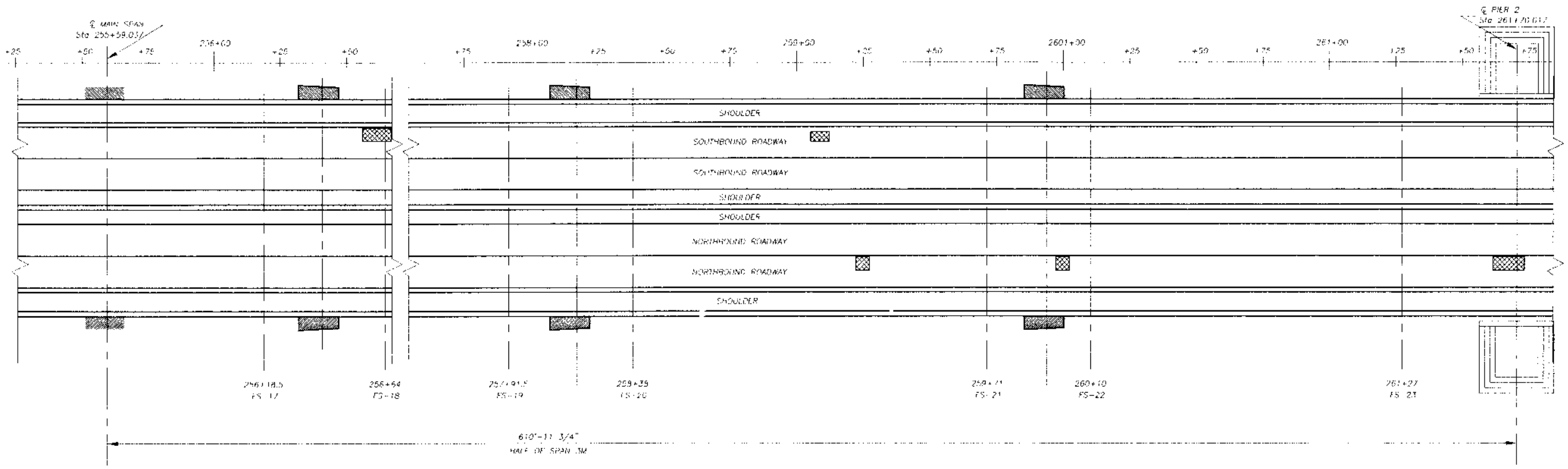

NOTE A: EXACT LOCATIONS/DIMENSIONS OF LONGITUDINAL & TRANSVERSE DECK SPLICE BOLTS AVAILABLE IN ORIGINAL BRIDGE CONSTRUCTION PLANS.(IF REQUIRED)

FS – DENOTES TRANSVERSE FILLED SPLICE

N

2/25/04

SHEET NUMBER	15
PARISH	ST. CHARLES
FEDERAL PROJECT	4503(508)
STATE PROJECT	450-37-0320
DESIGNED CHECKED	MH BT
DETAILED CHECKED	TB MH
DATE SCALE	12-11-02 N.T.S.

NO.	DATE	REVISION DESCRIPTION	BY

MISSISSIPPI RIVER BRIDGE (LULING)
DECK TEST SECTION
AND JOINT REPAIRS
SPAN 3M AND PLAN LAYOUT

HUVAL & ASSOCIATES, INC.
Consulting Engineers

X:\HUVAL Projects\3154 (LuAng)\CORE DWGS\revised 1-8-04\03\SPAN3M.dwg, MODEL 02/25/2004 10:24:01 AM

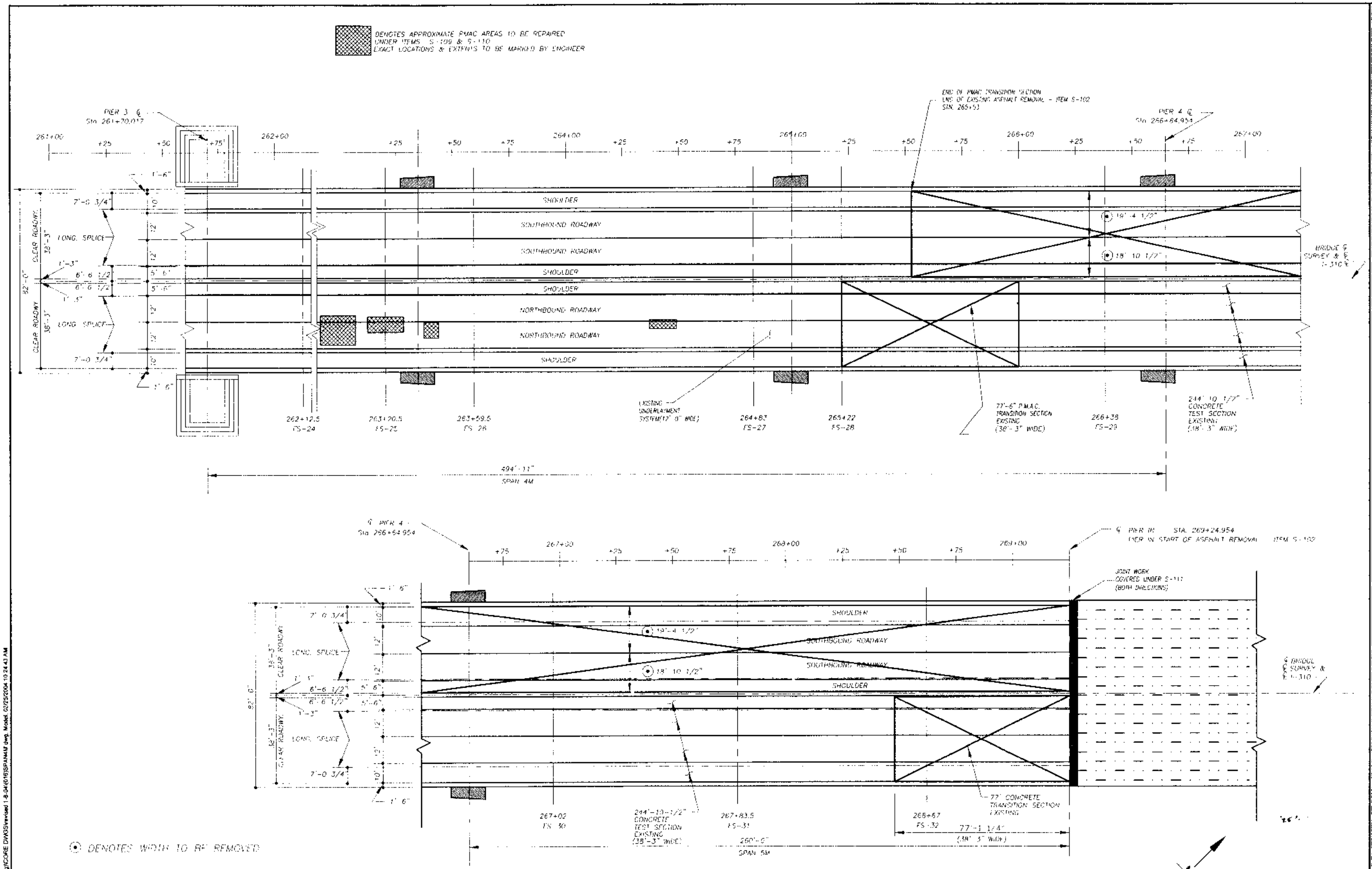

SHEET NUMBER	16
ST. CHARLES	4503(509)	450-37-0020
PARISH	FEDERAL PROJECT	STATE PROJECT
JAH DT	TB MH	12-11-02 N.T.S.
DESIGNED CHECKED	DETAILED CHECKED	DATE SCALE

NO. DATE REVISION DESCRIPTION BY

MISSISSIPPI RIVER BRIDGE (LULING)
DECK TEST SECTION
AND JOINT REPAIRS

SPANS 4M & 5M
2004 SB CONCRETE TEST SECTION

HUVAL & ASSOCIATES, INC.
Consulting Engineers

X:\HUVAL Projects\3154 (Luling)\CORE DWGS\revised 1-8-04\016\SPAN4M.dwg Model 02/25/2004 10:24:43 AM

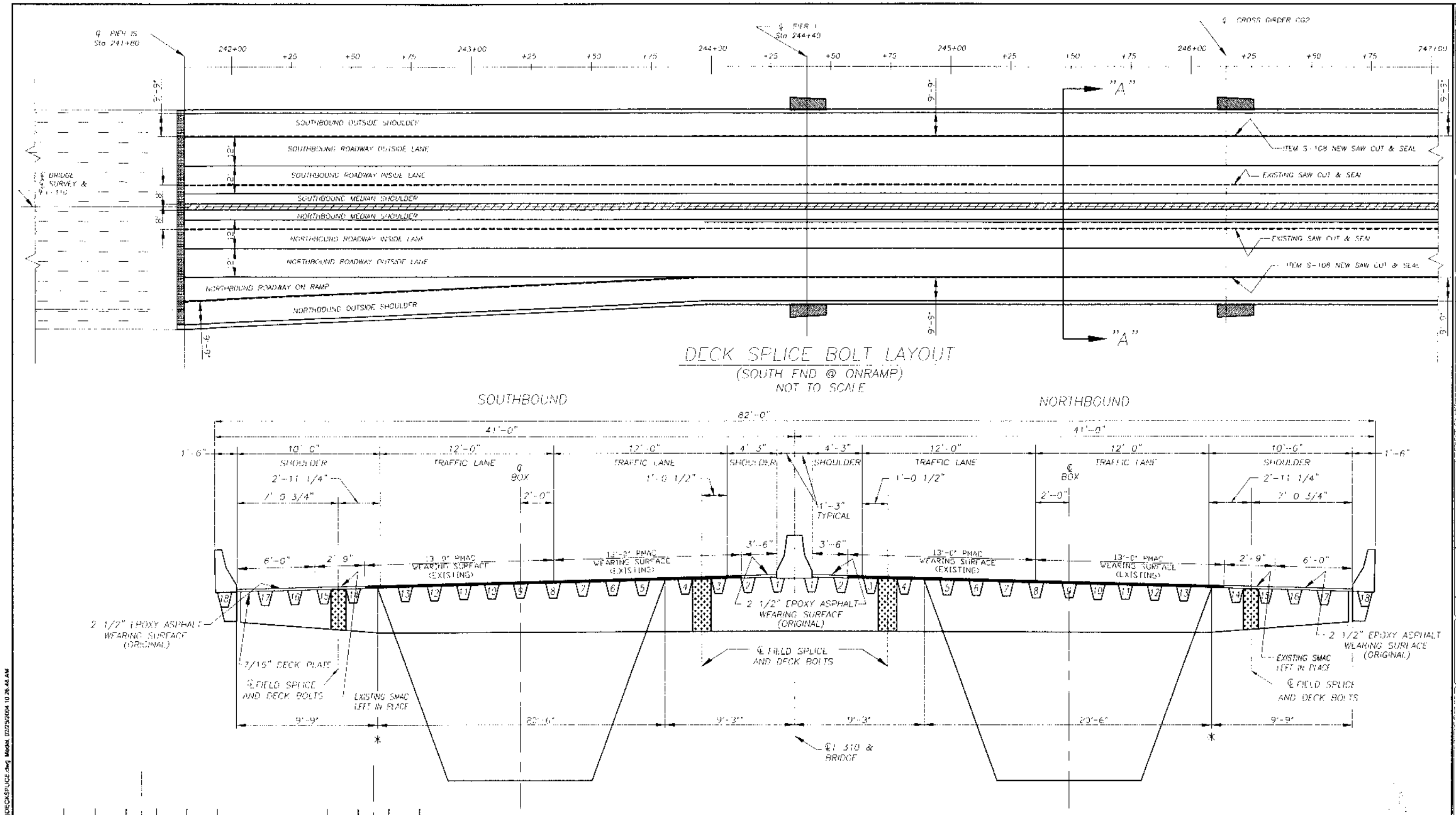
℄ PIER 15
Sta 241+80
℄ PIER 1
Sta 244+40
℄ CROSS GIRDER CG2
242+00
243+00
244+00
245+00
246+00
247+00
"A"
SOUTHBOUND OUTSIDE SHOULDER
SOUTHBOUND ROADWAY OUTSIDE LANE
SOUTHBOUND ROADWAY INSIDE LANE
SOUTHBOUND MEDIAN SHOULDER
NORTHBOUND MEDIAN SHOULDER
NORTHBOUND ROADWAY INSIDE LANE
NORTHBOUND ROADWAY OUTSIDE LANE
NORTHBOUND ROADWAY ON RAMP
NORTHBOUND OUTSIDE SHOULDER
ITEM S-108 NEW SAW CUT & SEAL
EXISTING SAW CUT & SEAL
EXISTING SAW CUT & SEAL
ITEM S-108 NEW SAW CUT & SEAL
℄ BRIDGE
SURVEY &
PI-110
9'-9"
9'-9"
9'-9"
9'-9"
9'-9"
9'-9"
9'-9"
9'-9"
2'-0"
2'-0"
2'-0

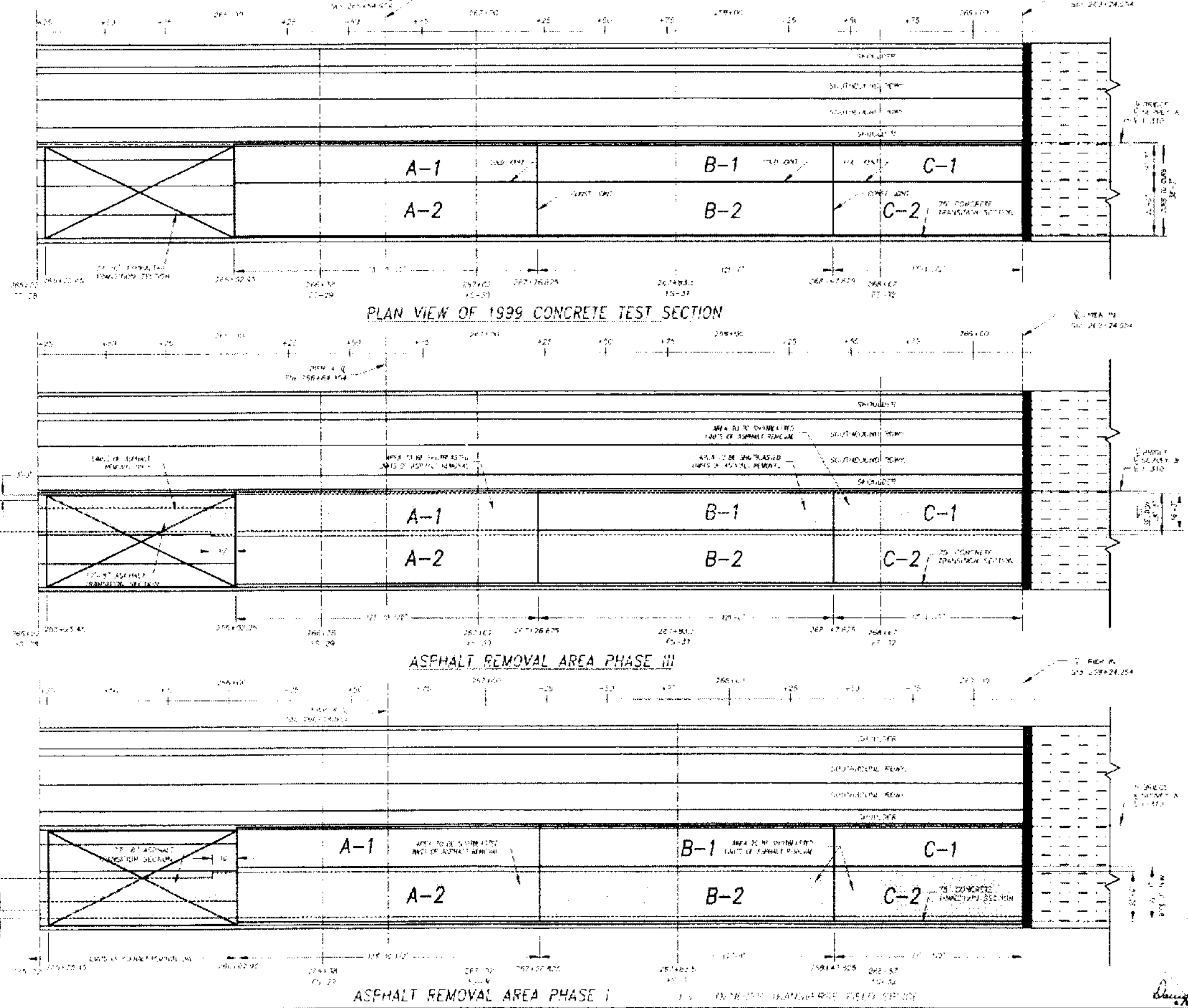

DRAWING PROVIDED FOR INFORMATIONAL PURPOSES ONLY

MISSISSIPPI RIVER BRIDGE (LULING)
DECK TEST SECTION
AND JOINT REPAIRS

EXISTING 1999 CONCRETE TEST SECTIONS

HUVAL

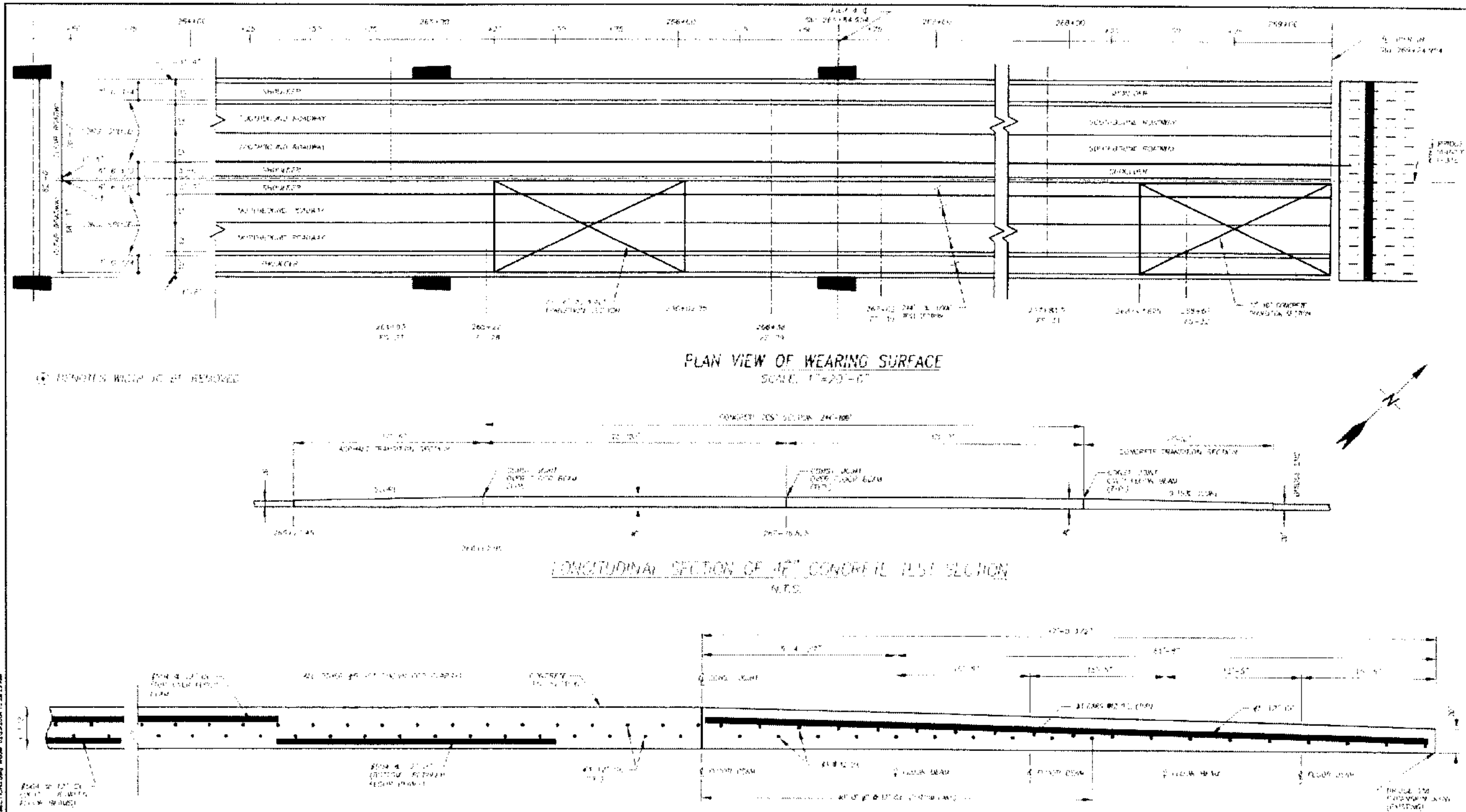

DRAWING PROVIDED FOR INFORMATIONAL PURPOSES ONLY

MISSISSIPPI RIVER BRIDGE (LULING)
DECK TEST SECTION
AND JOINT REPAIRS
EXISTING 1999 CONCRETE TEST SECTIONS

HUVAL

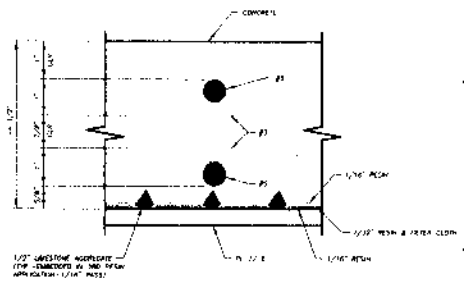

1999 CONCRETE TEST SECTION
N.T.S.

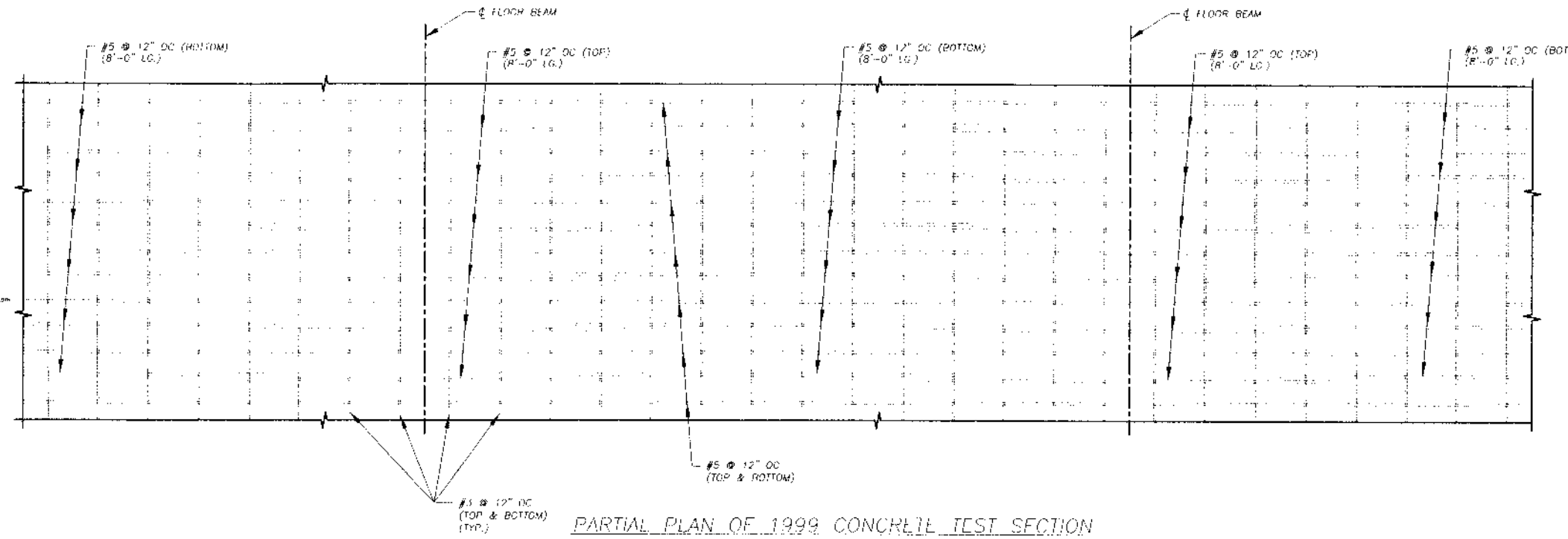

PARTIAL PLAN OF 1999 CONCRETE TEST SECTION

No	Qty.	LENGTH
301	609 Ea @	17'-0"
501	170 Ea @	40'-0"
502	68 Ea @	20'-0"
503	34 Ea @	28'-3"
504	510 Ea @	8'-0"
505	34 Ea @	25'-4"
506	17 Ea @	38'-6"

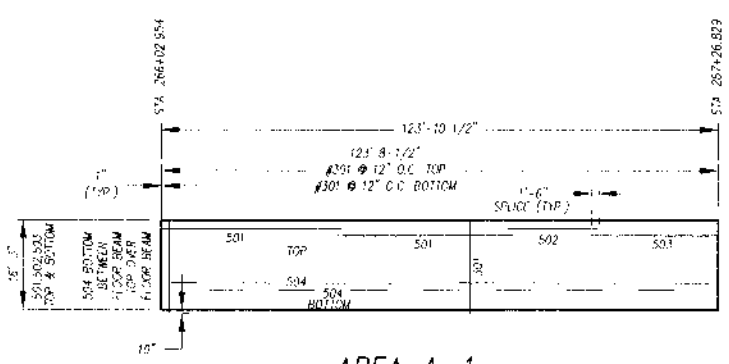

AREA A-1

No.	LENGTH	Qty.
501	40'-0"	68
502	20'-0"	34
503	28'-3"	34
504	8'-0"	255
301	17'-0"	247

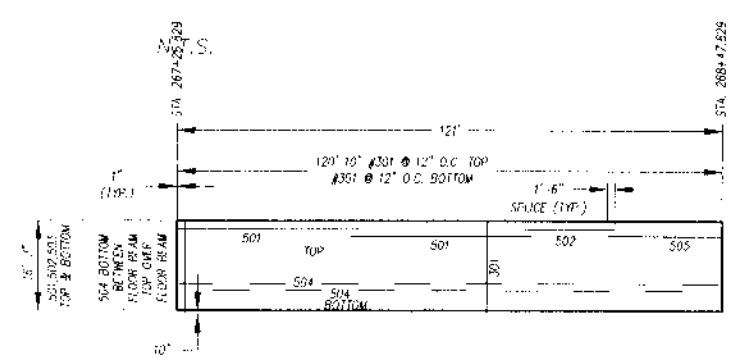

AREA B-1

No.	LENGTH	Qty.
501	40'-0"	68
502	20'-0"	34
505	25'-4"	34
504	8'-0"	255
301	17'-0"	243

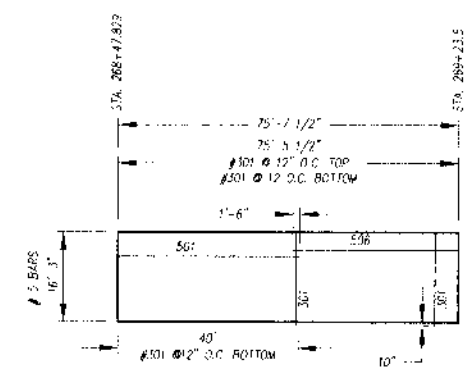

AREA C-1

No.	LENGTH	Qty.
501	40'-0"	34
506	38'-6"	17
301	17'-0"	78
301	17'-0"	41

No.	Qty	LENGTH
302	609 Ea. @	17'-0"
501	230 Ea. @	40'-0"
502	92 Ea. @	20'-0"
503	46 Ea. @	28'-3"
504	690 Ea @	8'-0"
505	46 Ea. @	25'-4"
506	29 Ea. @	38'-6"

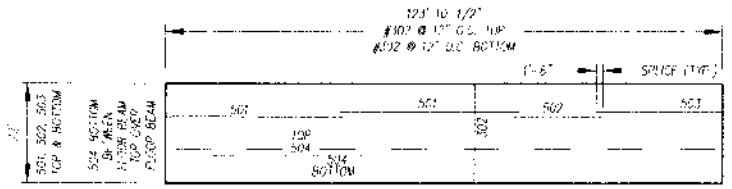

AREA A-2

No.	LENGTH	Qty.
501	40'-0"	92
502	20'-0"	46
503	28'-3"	46
504	8'-0"	345
302	21'-10"	247

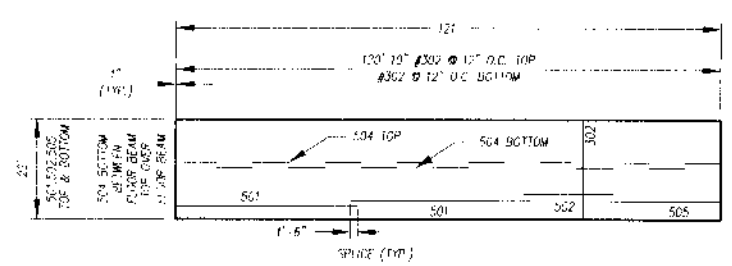

AREA B-2

No.	LENGTH	Qty.
501	40'-0"	92
502	20'-0"	46
504	8'-0"	345
505	24'-5"	46
302	21'-10"	243

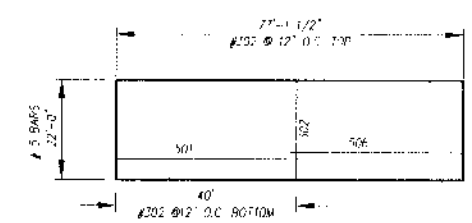

AREA C-2

No.	LENGTH	Qty.
501	40'-0"	46
506	38'-6"	23
302	21'-10"	78
302	21'-10"	41

DRAWING PROVIDED FOR INFORMATIONAL PURPOSES ONLY

2/25/04

SHEET NUMBER	20
PARISH	ST. CHARLES
FEDERAL PROJECT	4503(509)
STATE PROJECT	450-37-0020
DESIGNED / CHECKED	MH / DT
DETAILED / CHECKED	TB / MH
DATE / SCALE	12-11-02 / N.T.S.

NO. | DATE | REVISION DESCRIPTION | BY

MISSISSIPPI RIVER BRIDGE (LULING)
DECK TEST SECTION
AND JOINT REPAIRS

EXISTING 1999 CONCRETE TEST SECTION
REINFORCED STEEL LAYOUT

HUVAL & ASSOCIATES, INC.
Consulting Engineers

X:\HUVAL Projects\3154 (Luling)\CORE DWGS\revised 1-8-04\020SPANDETAILS.dwg, Model, 02/25/2004 10:29:00 AM

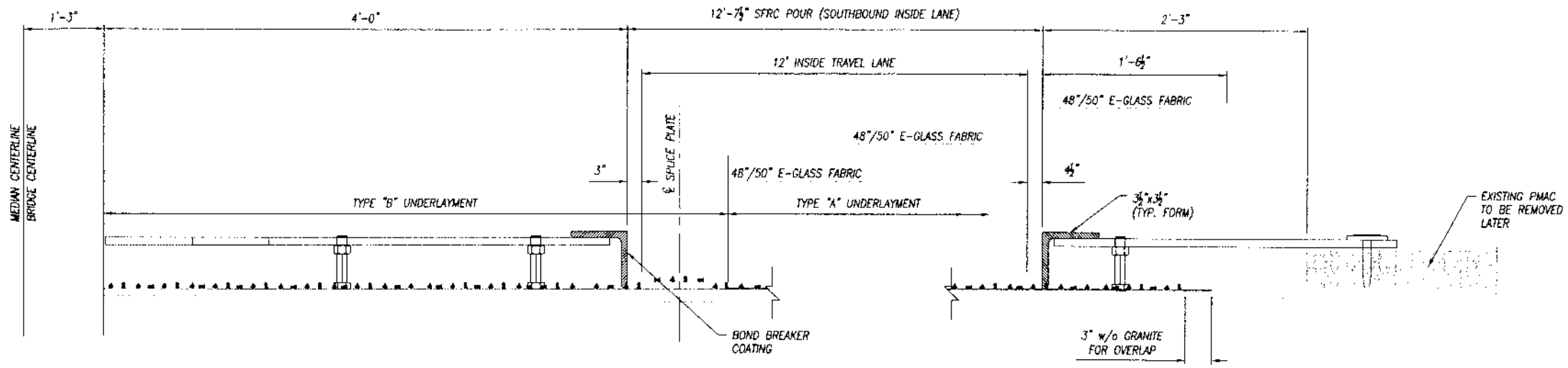

SOUTHBOUND INSIDE LANE

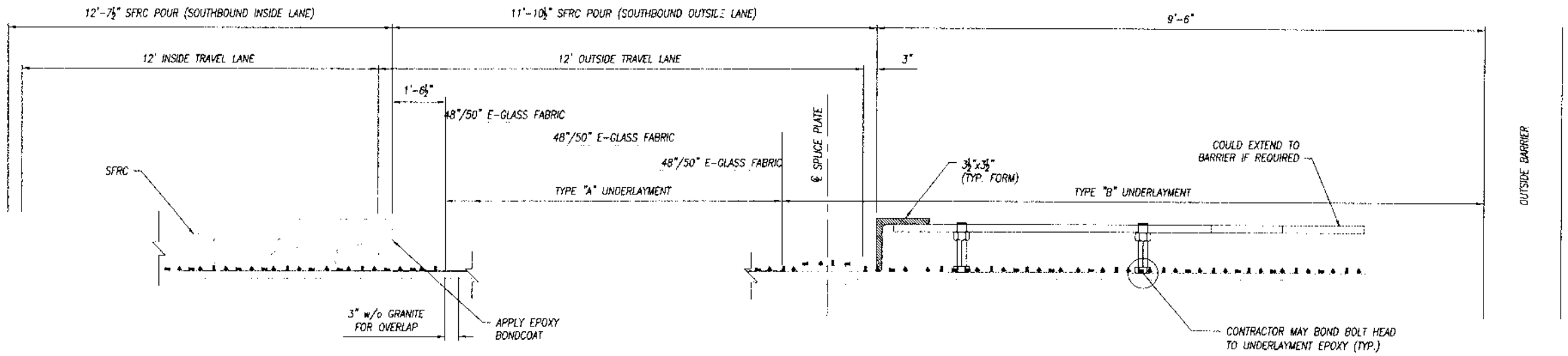

SOUTHBOUND OUTSIDE LANE

NOTE:
IF 3½" MANUFACTURED SHAPE USED FOR SFRC POUR/FORM, CONTRACTOR MAY INCREASE TOTAL THICKNESS TO 3½" SFRC + UNDERLAYMENT THICKNESS IN LIEU OF 3½" TOTAL OF SFRC PLUS UNDERLAYMENT.

GENERAL NOTE:
CONTRACTOR IS HIGHLY ADVISED TO DEVELOP PROPOSED FORM SYSTEM AND INSTALLATION SEQUENCE/PROCEDURE AS EARLY AS POSSIBLE AND SUBMIT PROCEDURES FOR REVIEW AND APPROVAL PRIOR TO REQUESTING "FULL NOTICE TO PROCEED". THE PROJECT WILL NOT ALLOW ANY SFRC FORM WELDING TO THE DECK PLATE.

APPROVED FORM SYSTEM MAY BE PLACED AS PART OF OR IMMEDIATELY AFTER UNDERLAYMENT INSTALLATION (PRIOR TO FULL EPOXY CURE) AND THEREBY UTILIZE UNDERLAYMENT EPOXY SYSTEM FOR DECK ADHESION PROVIDED ACT OF INSTALLATION DOES NOT DAMAGE FINAL GRANITE CHIP INSTALLATION RESULTS AND LATER FORM SUPPORT ATTACHMENT REMOVAL DOES NOT DAMAGE UNDERLAYMENT INSTALLATION.

Daniel P. Hurwal
2/25/04

SHEET NUMBER 21

ST. CHARLES | 450J(509) | 450-37-0020

PARISH | FEDERAL PROJECT | STATE PROJECT

DESIGNED MH | DT
CHECKED
DETAILED TB | MH
CHECKED
DATE 12-11-02
SCALE N.T.S.

DT

REVISION DESCRIPTION | DATE | NO.

MISSISSIPPI RIVER BRIDGE (LULING)
DECK TEST SECTION
AND JOINT REPAIRS

FABRIC LAYOUT AND SFRC
FORMING ALLOWANCE

HUVAL & ASSOCIATES, INC.
Consulting Engineers

X:\HUVAL Projects\3154 (Luling)\CORE DWGS\revised 1-8-04\021\FABRIC LAYOUT.dwg, Layout1, 02/25/2004 10:29:40 AM

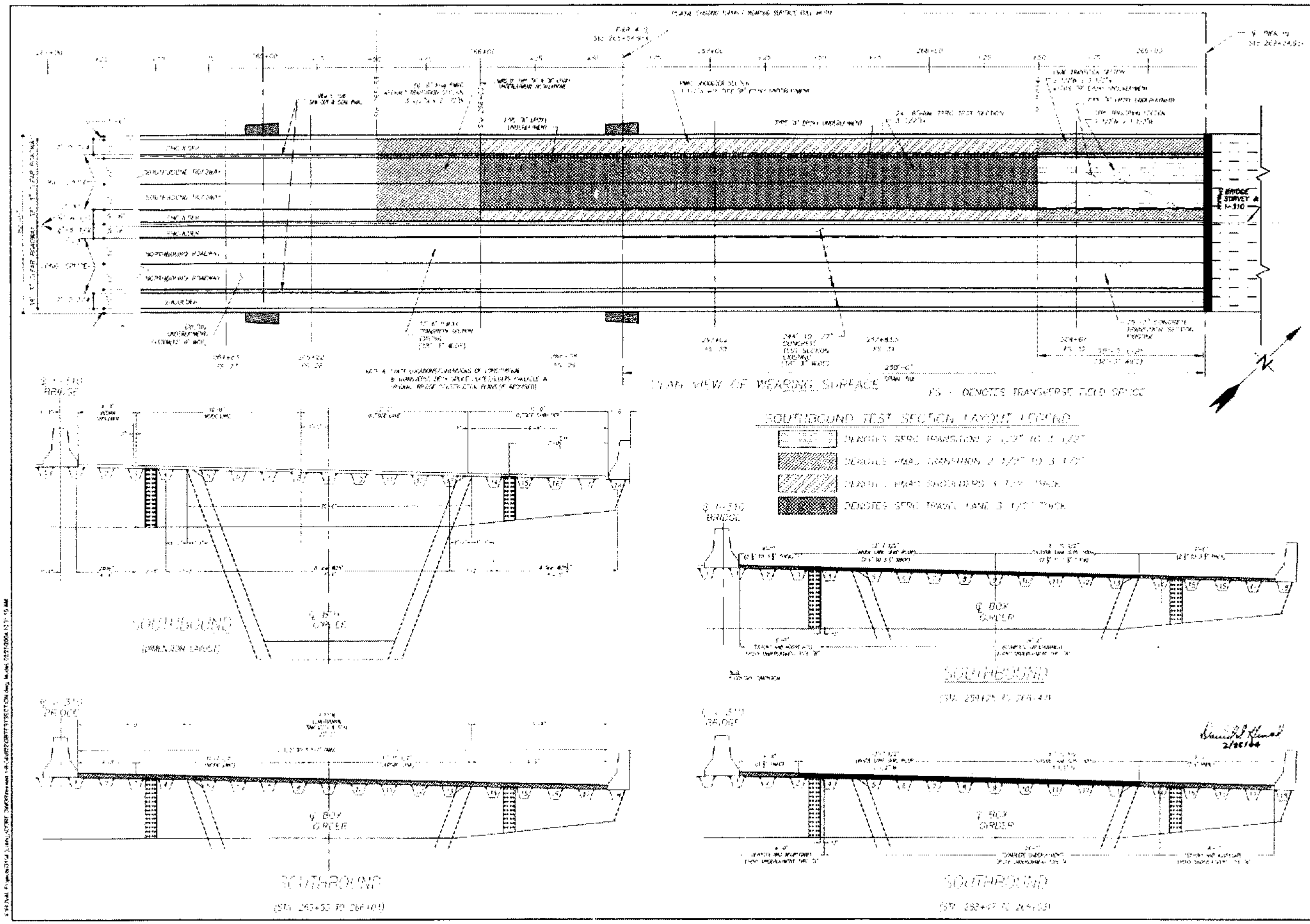
PLAN VIEW OF WEARING SURFACE
FS - DENOTES TRANSVERSE FIELD SPLICE
SOUTHBOUND TEST SECTION LAYOUT LEGEND
SOUTHBOUND
(DIMENSION LAYOUT)
SOUTHBOUND
SOUTHBOUND
(STA. 265+52 TO 266+01)
SOUTHBOUND
SOUTHBOUND
BRIDGE SURVEY # I-310
MISSISSIPPI RIVER BRIDGE (LULING)
DECK TEST SECTION
AND JOINT REPAIRS
LAYOUT DIMENSIONS
SOUTHBOUND CONCRETE TEST SECTION
HUVAL

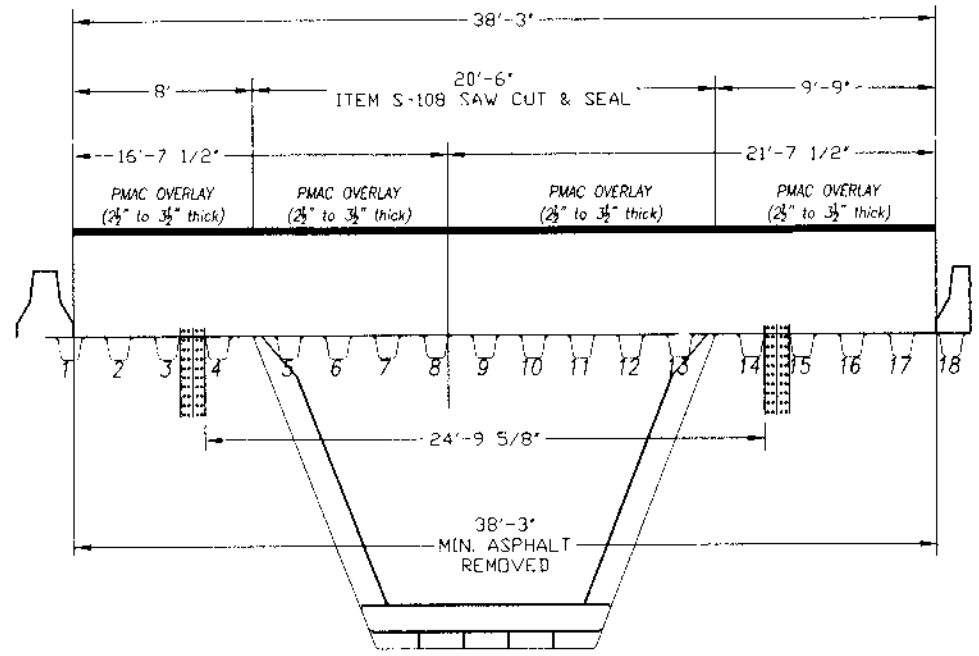

UNDERLAYMENT, SFRC POURS, & PMAC OVERLAY LIMITS
(Stn. 266+03 to 265+53)

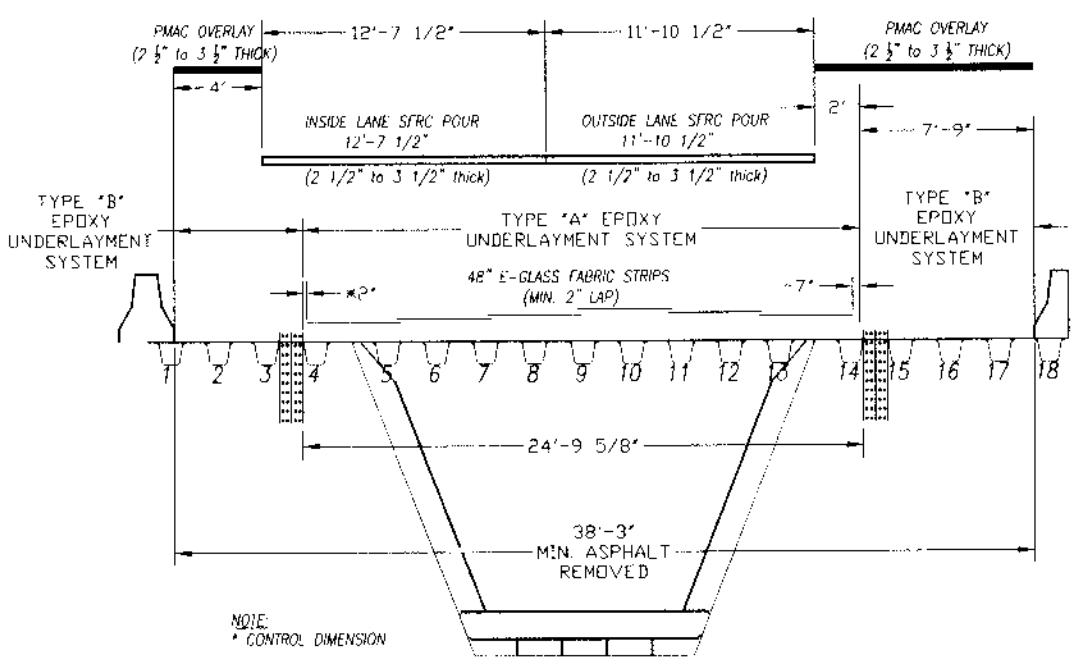

UNDERLAYMENT, SFRC POURS, & PMAC OVERLAY LIMITS
(Stn. 269+25 to 268+47)

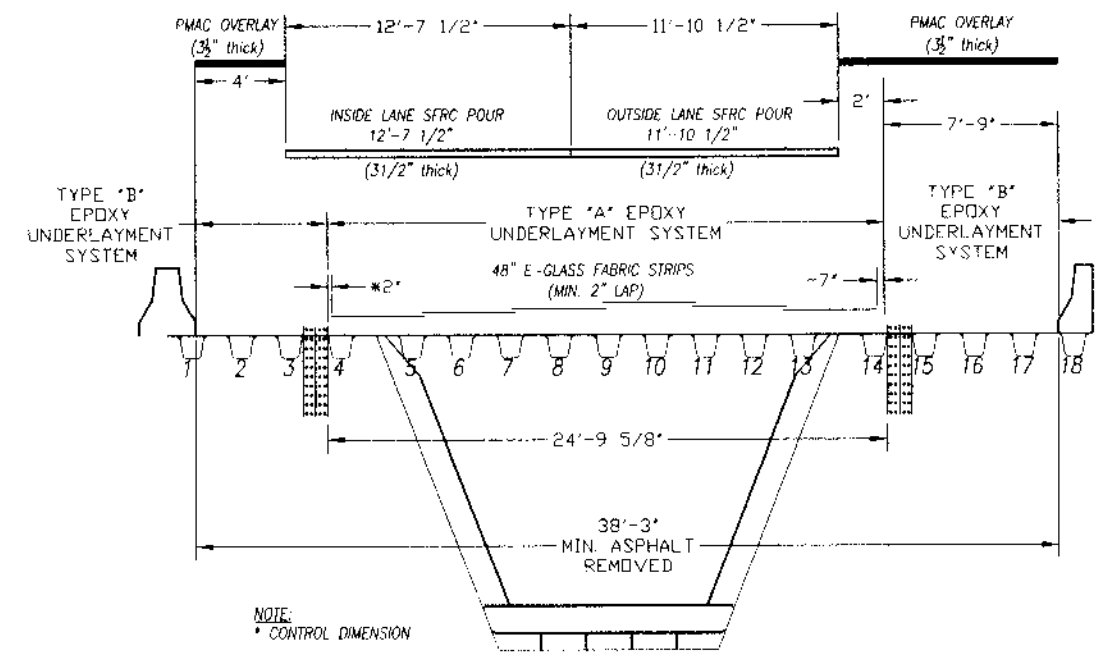

UNDERLAYMENT, SFRC POURS, & PMAC OVERLAY LIMITS
(Stn. 268+47 to 266+03)

Daniel S. Hurst
2/25/04

SHEET NUMBER	23
PARISH	ST. CHARLES
FEDERAL PROJECT	4503(509)
STATE PROJECT	450-37-0020
DESIGNED / CHECKED	MH / DT
DETAILED / CHECKED	TB / MH
DATE / SCALE	12-11-02 / N.T.S.

NO.	DATE	REVISION DESCRIPTION	BY

MISSISSIPPI RIVER BRIDGE (LULING)
DECK TEST SECTION
AND JOINT REPAIRS

TYPICAL SOUTHBOUND TEST SECTIONS
SOUTHBOUND CONCRETE TEST SECTIONS

HUVAL & ASSOCIATES, INC.
Consulting Engineers

X:\HUVAL Projects\3154 Luling\CORE DWGS\revised 1-8-04\023EXISTSECTION.dwg, Model, 02/25/2004 10:32:10 AM

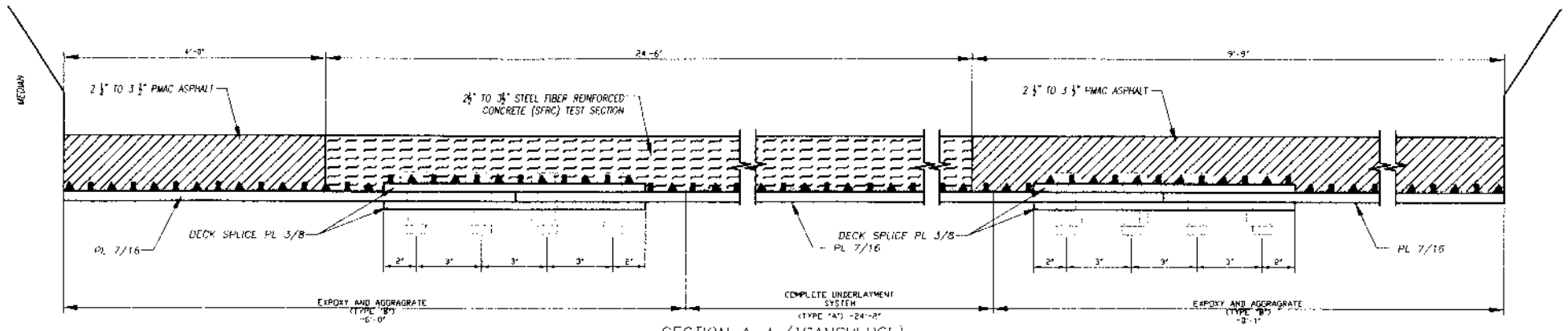

SECTION A-A (TRANSVERSE)
STA. 269+25 TO STA. 268+47
N.T.S.

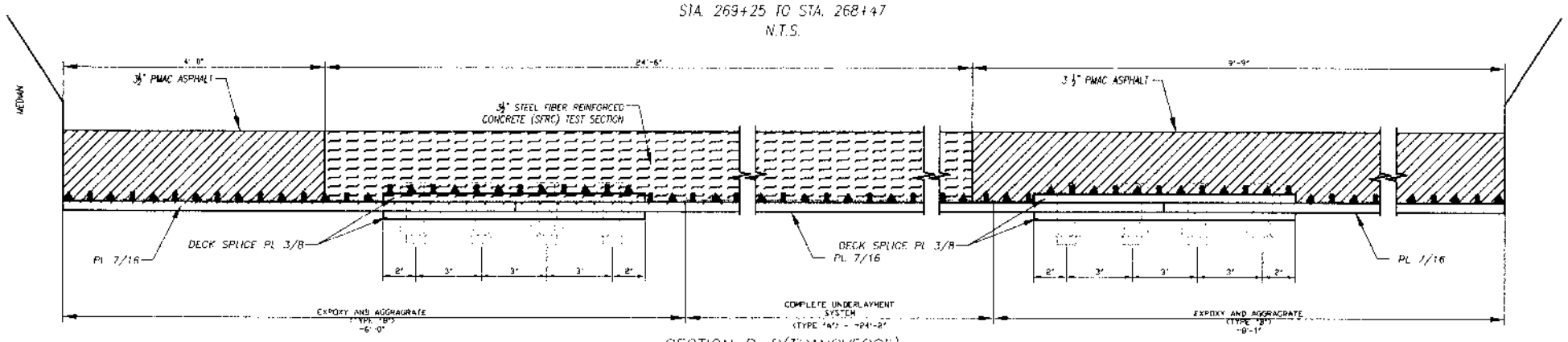

SECTION B-B(TRANSVERSE)
STA. 268+47 TO STA. 266+03
N.T.S.

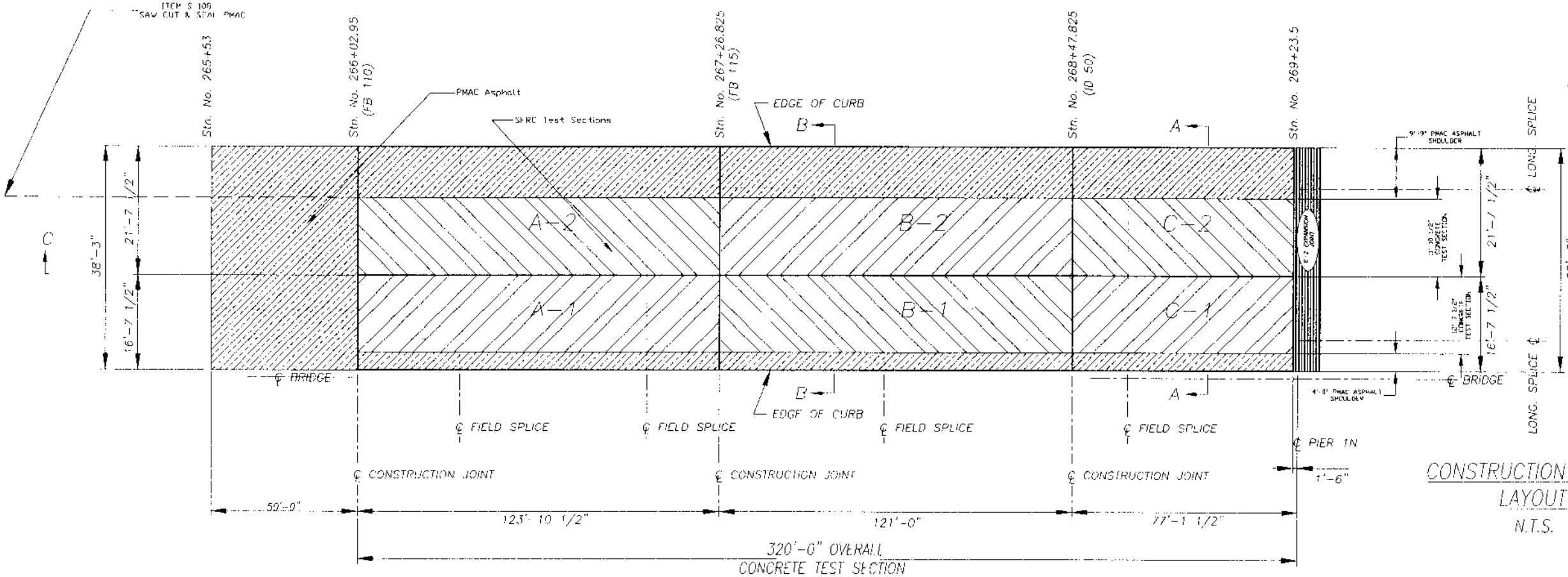

CONSTRUCTION JOINTS LAYOUT
N.T.S.

QUANTITIES
SOUTHBOUND STA. 269+25 TO 265+53

ASPHALT REMOVAL
1,581 S.Y.

EPOXY UNDERLAYMENT
TYPE "A"
7,986 S.F.

TYPE "B"
4,330 S.F.

STEEL FIBER REINFORCED CONCRETE
A1 - 16.89 C.Y.
A2 - 15.81 C.Y.
B1 - 16.50 C.Y.
B2 - 15.52 C.Y.
C1 - 9.02 C.Y.
C2 - 8.48 C.Y.
82.22 C.Y.

PMAC
INSIDE LANE - 43.64 TONS
OUTSIDE LANE - 88.24 TONS
131.88 TONS

2/25/04

SHEET NUMBER	24		
ST. CHARLES	4503(609)	450-37-0020	
PARISH	FEDERAL PROJECT	STATE PROJECT	
MAN DT	TB MAY	12-11-02 N.T.S.	
DESIGNED CHECKED	DETAILED CHECKED	DATE SCALE	BY

REVISION DESCRIPTION | NO. | DATE

MISSISSIPPI RIVER BRIDGE (LULING)
DECK TEST SECTION AND JOINT REPAIRS

TRANSVERSE SECTIONS
SOUTHBOUND CONCRETE TEST SECTIONS

HUVAL & ASSOCIATES, INC. Consulting Engineers

X:\HUVAL Projects\3154 (Luling)\CORE DWGS\revised 1-8-04\024-025\TRANSLONGSECTIONS.dwg, Model 02/25/2004 10:32:53 AM

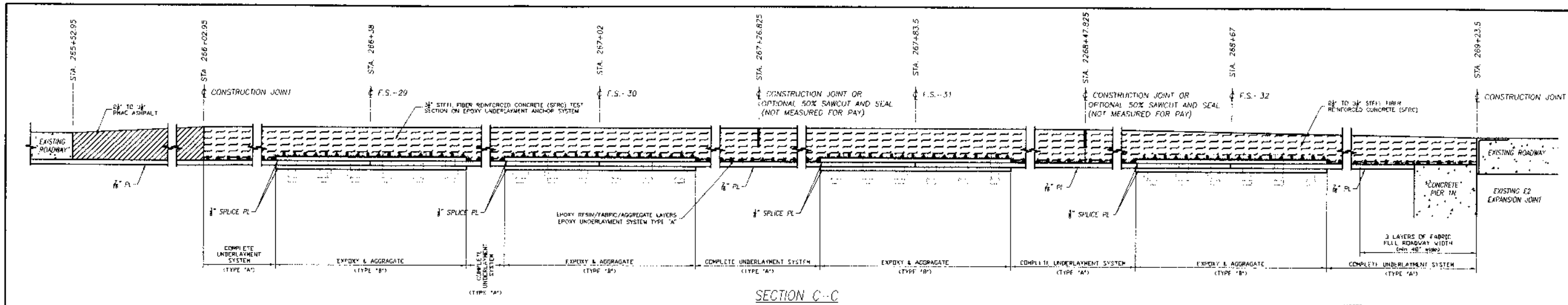

SECTION C-C
(LONGITUDINAL)
N.T.S.

NOTES:

1. THE ADDITIONAL TWO LAYERS OF FABRIC WITHIN THE SFRC WIDTHS FOR EPOXY UNDERLAYMENT TYPE "A" AND THE ADDITION OF THREE LAYERS OF FABRIC WITHIN THE PMAC SHOULDERS FOR EPOXY UNDERLAYMENT TYPE "B" AT STN. 269+25 WILL BE CONSIDERED INCIDENTAL TO THE RESPECTIVE EPOXY UNDERLAYMENT PAY ITEM AND NOT BE MEASURED FOR PAY.
2. CONTRACTOR TO SUBMIT EDGE FORM DETAIL FOR APPROVAL.

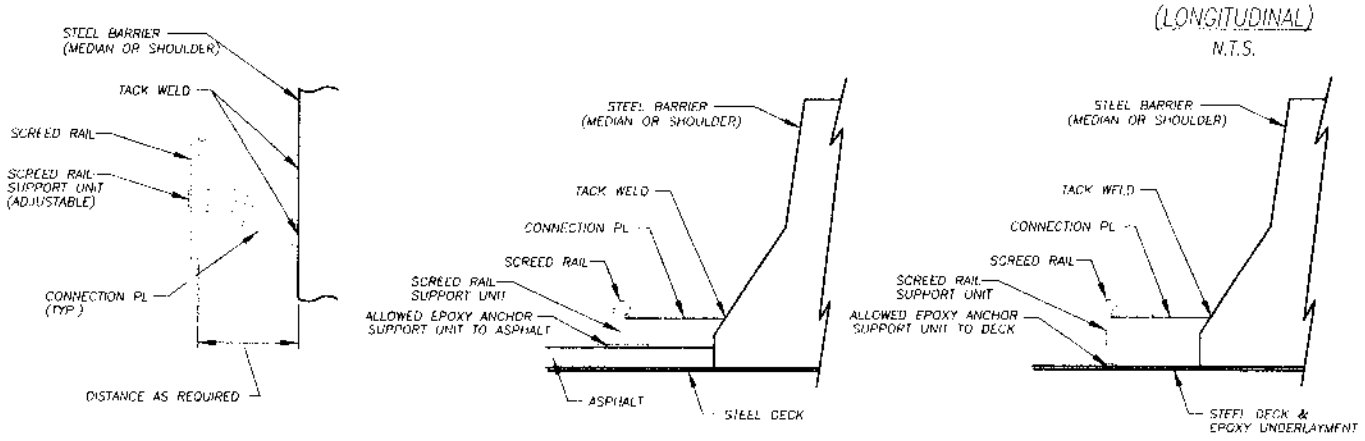

PLAN

ELEV. (ON PMAC)

ELEV. (ON DECK PLATE)

TYPICAL CONCRETE SCREED RAIL SUPPORT ATTACHMENT

NOTES:

1. WELDING TO ONLY BARRIERS IS ALLOWED.
2. ADJUST RAIL SUPPORT UNIT TO CORRECT ELEVATION & TACK WELD PLATE TO BARRIER AS REQUIRED.
3. AFTER REMOVAL OF RAIL UNIT, GRIND & SPOT PAINT BARRIER WHERE TACK WELDS WERE USED. PAINT WITH COLD SPRAY ZINC RICH GALVANIZED PAINT.
4. ALL SFRC FORM MATERIAL TEMPORARY BONDED/ANCHORED TO DECK OR UNDERLAYMENT WILL BE COMPLETELY REMOVED PRIOR TO BEING COVERED WITH SFRC.

2/26/04

SHEET NUMBER	25
ST. CHARLES	4503(509)
450-37-0020	
PARISH	FEDERAL PROJECT
STATE PROJECT	
MH ST	TB MH
12-1-1-02 N.T.S.	
DESIGNED CHECKED	DETAILED CHECKED
DATE SCALE	

NO.	DATE	REVISION DESCRIPTION	BY

MISSISSIPPI RIVER BRIDGE (LULING)
DECK TEST SECTION
AND JOINT REPAIRS

LONGITUDINAL SECTION
SOUTHBOUND CONCRETE TEST SECTIONS

HUVAL & ASSOCIATES, INC.
Consulting Engineers

X:\HUVAL Projects\3154 (Luling)\CORE DWGS\revised 1-8-04\024-025\TRANSLONGSECTIONS.dwg, Model, 02/25/2004 10:33:30 AM

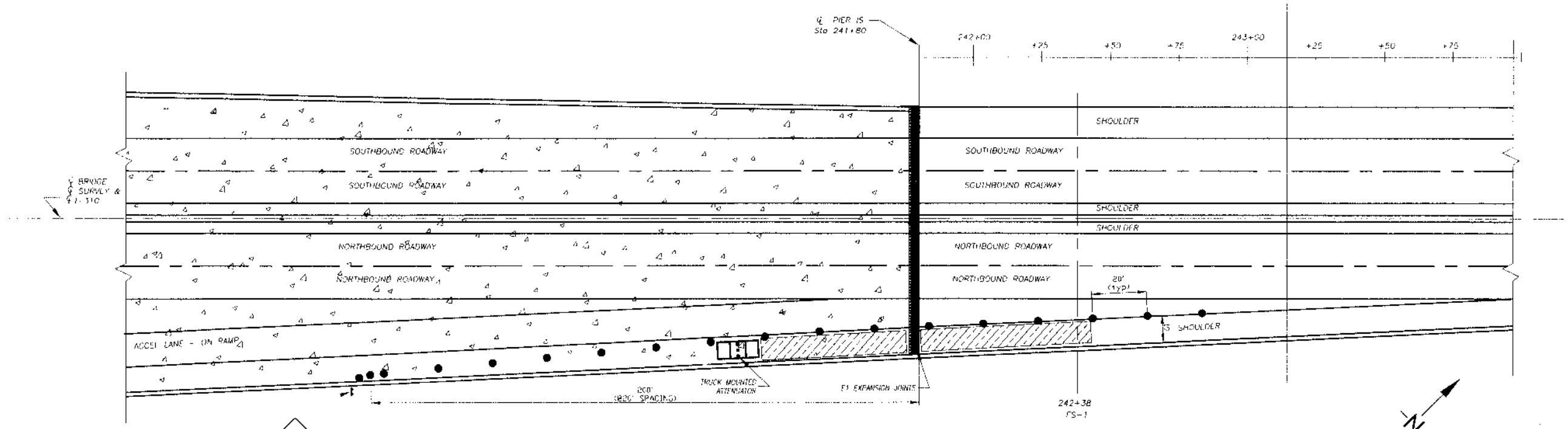

SHOULDER WORK AHEAD

E1 TEMPORARY SHOULDER TRAFFIC CLOSURE

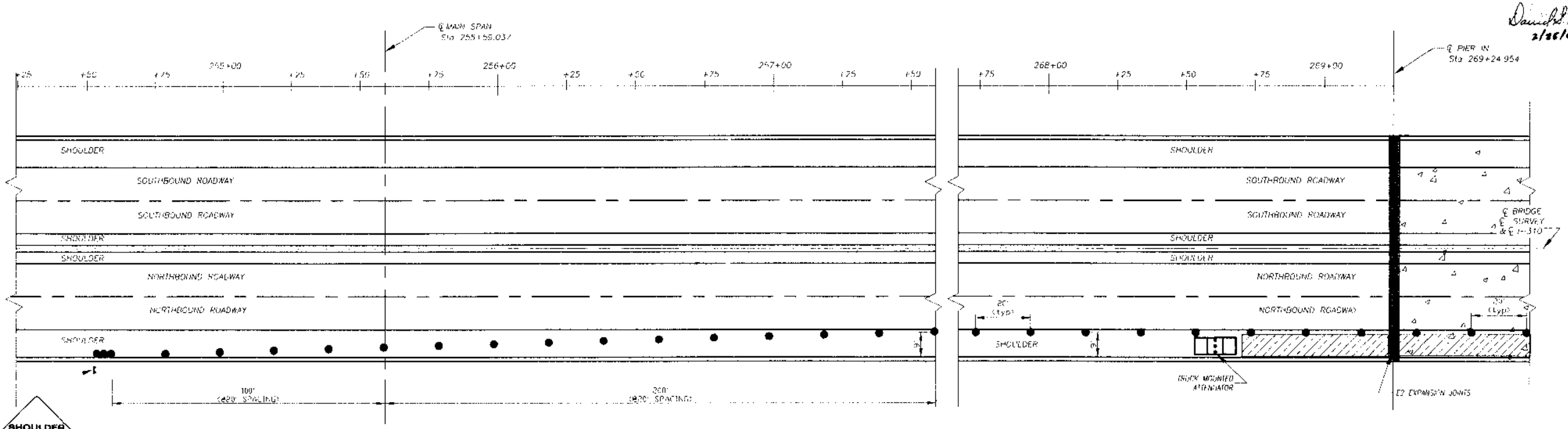

SHOULDER WORK AHEAD

E2 TEMPORARY SHOULDER TRAFFIC CLOSURE

SPECIAL NOTES FOR TEMPORARY NORTHBOUND ROADWAY SHOULDER CLOSURE

1- SHOULDER CLOSURES WITH DELINEATORS FOR E2 WORK ONLY ALLOWED DURING DAYLIGHT HOURS

2- MAXIMUM HALF-HOUR TEMPORARY VEHICLE/EQUIPMENT PRESENCE IN SHOULDER AREA ALLOWED WITHOUT DEPLOYING TRAFFIC DELINEATORS

3- DELINEATORS TO BE DEPLOYED MINIMUM 40' PAST LAST OBSTRUCTION IN CLOSED SHOULDER AREA

4- DELINEATORS TO BE REMOVED FROM BRIDGE WHEN E2 SHOULDER STAGING AREA UNOCCUPIED OR WORKERS NOT PURSUING ITEM S-111 WORK UNDER BRIDGE DECK.

5- SHOULDER CLOSURES ASSOCIATED WITH WORK FOR E2 WILL NOT BE ALLOWED IN CONCERT WITH ANY NORTHBOUND INSIDE LANE CLOSURE

6- CONTRACTOR MAY STAGE EQUIPMENT ON BRIDGE PIER CAP IN LIEU OF DECK SHOULDER AREA DEPLOYING DELINEATORS ONLY DURING EQUIPMENT/MATERIAL DEPLOYMENT AND RETRIEVALS WHEN PRESENCE WILL BE FOR MORE THAN ONE HALF-HOUR

● DENOTES TRAFFIC DELINEATORS - TYPE AS SHOWN ON DWG. 21

DENOTES POSSIBLE SHOULDER STAGING AREAS

Daniel D. Huval
2/26/04

SHEET NUMBER	26
PARISH	ST. CHARLES
FEDERAL PROJECT	4503(508)
STATE PROJECT	450-37-0020
DESIGNED / CHECKED	MH / DT
DETAILED / CHECKED	TB / MH
DATE / SCALE	02-20-03 / N.T.S.

NO.	DATE	REVISION DESCRIPTION	BY

MISSISSIPPI RIVER BRIDGE (LULING)
DECK TEST SECTION
AND JOINT REPAIRS

NORTHBOUND SHOULDER CLOSURE
EXPANSION JOINT WORK

HUVAL & ASSOCIATES, INC.
Consulting Engineers

X:\HUVAL Projects\3154 (Luling)\CORE D\MS5\revised 1-8-04\026\E_TRAFFIC.dwg, Model 02/26/2004 10:34:00 AM

SEE REFERENCE DRAWING SHEETS 103-104 & SHOP DRAWING SHEETS 110-116

COMPRESSION SPRINGS - ITEM 4260 (C-306)
3,600LBS FOR ½" COMPRESSION

BEARINGS - ITEM 4270 (C-307)
5,600LBS FOR ¼" COMPRESSION
10,800LBS FOR ⅜" COMPRESSION

CONTROL SPRINGS (with Nylon Dowels) - ITEM 4310 (C-5590)
1,000LBS FOR 2" COMPRESSION

NEOPRENE SEALS - ITEM 1040 (C-5603)

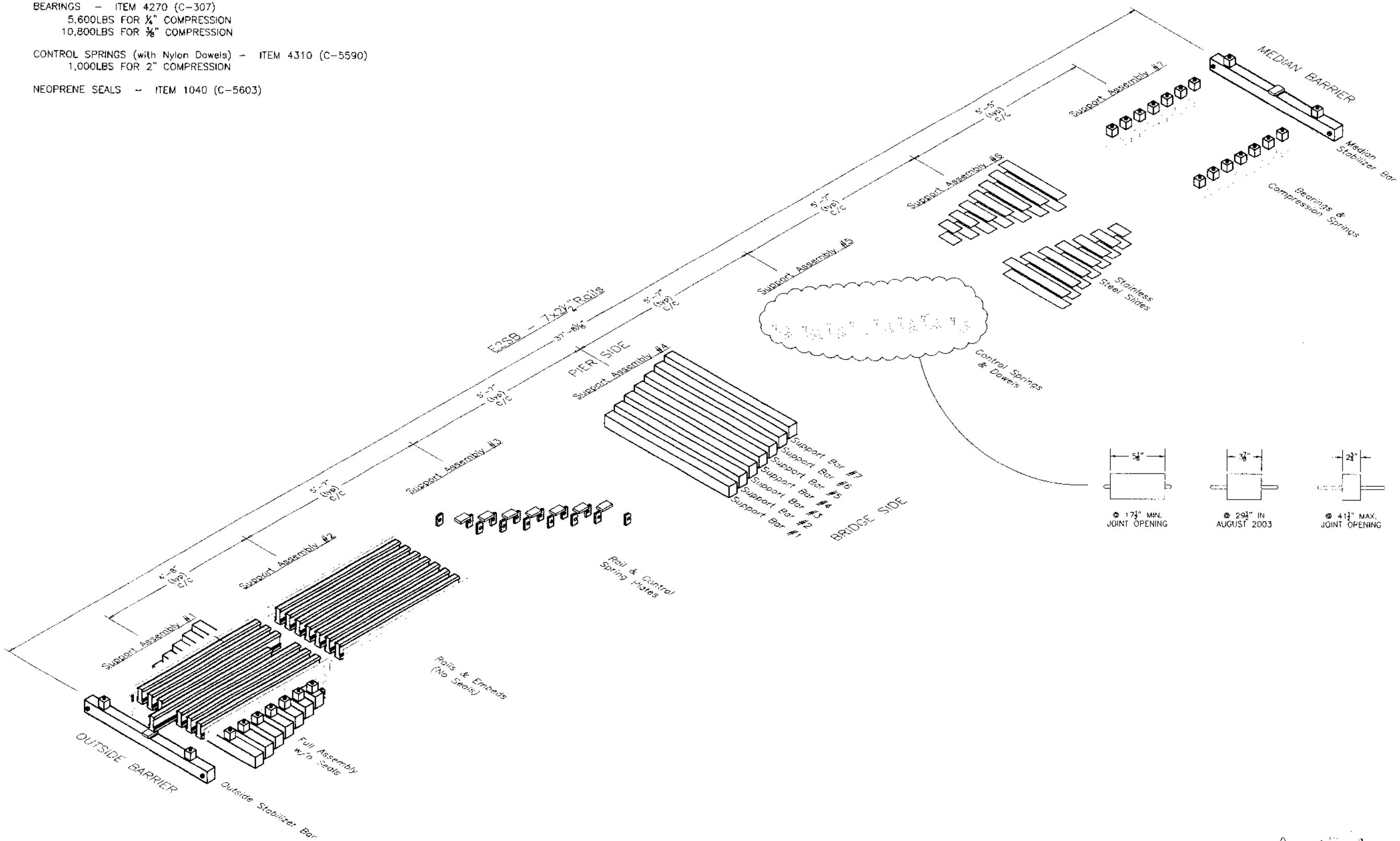

David L. Huval
2/25/04

SHEET NUMBER 27

ST. CHARLES | PARISH | 450-37-0020 | STATE PROJECT | 450(509) | FEDERAL PROJECT | MH DT | AJ MH | DESIGNED CHECKED | DETAILED CHECKED | 09-23-03 N.T.S. | DATE SCALE | BY | NO. | DATE | REVISION DESCRIPTION

MISSISSIPPI RIVER BRIDGE (LULING)
DECK TEST SECTION
AND JOINT REPAIR

INSTALLATION/ ASSEMBLY DETAILS
E2 SOUTHBOUND

HUVAL & ASSOCIATES, INC. Consulting Engineers

X:\HUVAL Projects\3154 (Luling)\CORE DWGS\revised 1-5-04\027-028\E2SB3D.dwg, SOUTHBOUND, 02/25/2004 10:35:33 AM

SEE REFERENCE DRAWING SHEETS 103-104 & SHOP DRAWING SHEETS 117-126

COMPRESSION SPRINGS – ITEM 4260 (C-306)
3,600LBS FOR ½" COMPRESSION

BEARINGS – ITEM 4270 (C-307)
5,600LBS FOR ¼" COMPRESSION
10,800LBS FOR ⅜" COMPRESSION

CONTROL SPRINGS (with Nylon Dowels) – ITEM 4310 (C-5590)
1,000LBS FOR 2" COMPRESSION

NEOPRENE SEALS – ITEM 1040 (C-5603)

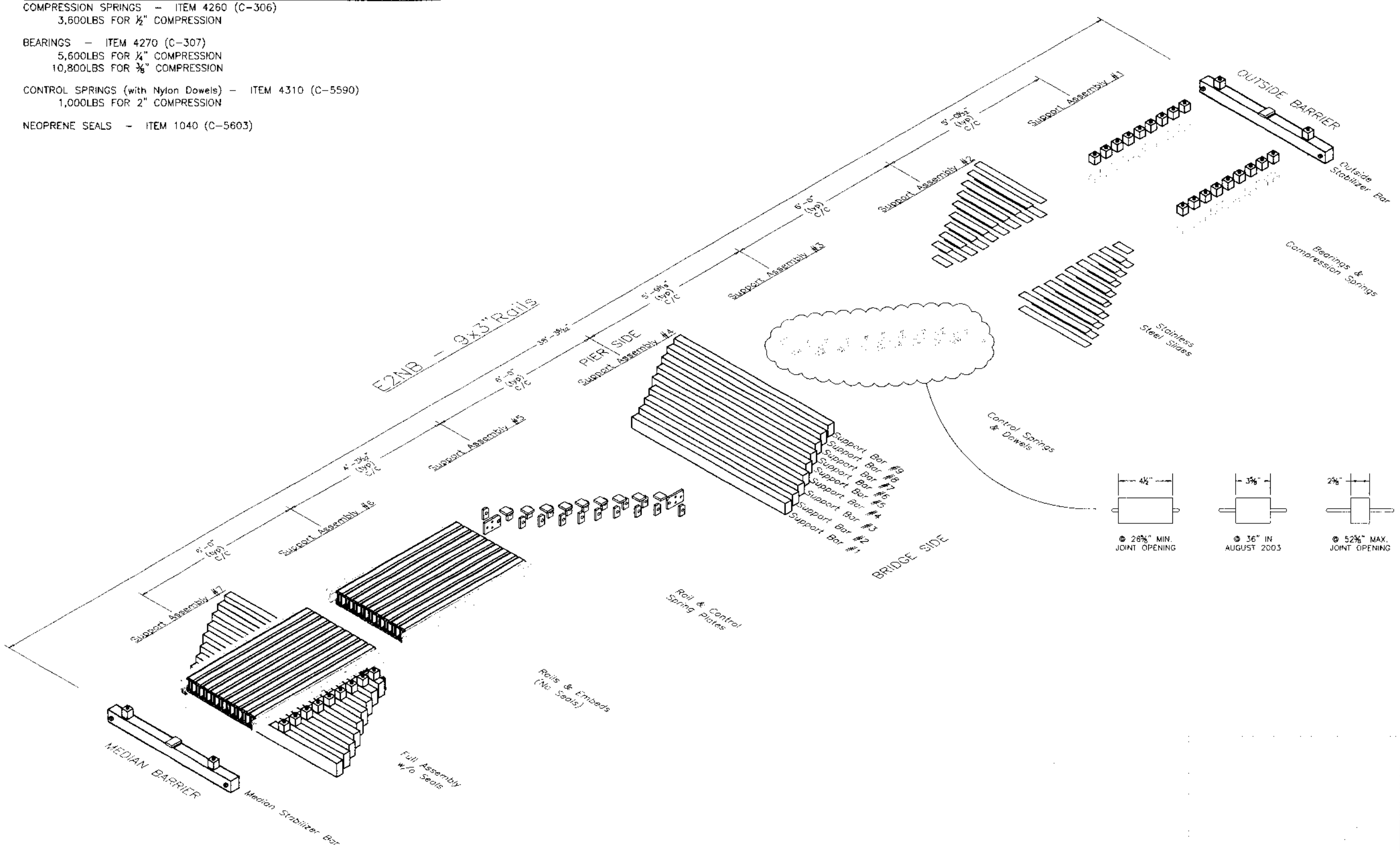

Daniel L. Huval
2/25/04

SHEET NUMBER 28

ST. CHARLES | 450J(509) | 450-37-0020

PARISH | FEDERAL PROJECT | STATE PROJECT

DESIGNED MH | CHECKED DT | DETAILED AJ | CHECKED MH | DATE 09-23-03 | SCALE N.T.S.

NO. | REVISION DESCRIPTION | DATE | BY

MISSISSIPPI RIVER BRIDGE (LULING)
DECK TEST SECTION
AND JOINT REPAIR

INSTALLATION/ ASSEMBLY DETAILS
E2 NORTHBOUND

HUVAL & ASSOCIATES, INC.
Consulting Engineers

X:\HUVAL Projects\3154 (Luling)\CORE DWG\Revised 1-6-04\027-029\E2SBSD.dwg, NORTHBOUND, 02/25/2004 10:36:04 AM

EAST BANK E2: (SOUTHBOUND) SPECIFIC REPAIR LIST

SF1– REPLACE ALL EIGHT CONTROL SPRINGS & DOWELS

SF2 – REPLACE ALL EIGHT CONTROL SPRINGS & DOWELS
ROTATE BRIDGE BEARING @ SB2 & 3

SF3– ~~REPLACE ALL EIGHT CONTROL SPRINGS & DOWELS~~ **
ROTATE PIER BEARING @ SB1,2,& 5
ROTATE BRIDGE BEARING @ SB2,3,& 5

SF4– ~~REPLACE ALL EIGHT CONTROL SPRINGS & DOWELS~~ **
ROTATE PIER BEARING @ SB4 & 5
ROTATE BRIDGE BEARING @ SB3

SF5– ~~REPLACE ALL EIGHT CONTROL SPRINGS & DOWELS~~ **
ROTATE PIER BEARING @ SB3 & 5
ROTATE BRIDGE BEARING @ SB1,2,& 4

SF6– REPLACE ALL EIGHT CONTROL SPRINGS & DOWELS
ROTATE PIER BEARING @ SB3,4,6,& 7
ROTATE BRIDGE BEARING @ SB3
REPLACE BRIDGE BEARING @ SB2

SF7– REPLACE ALL EIGHT CONTROL SPRINGS & DOWELS

–REPLACE SEAL #5 & #6
–CLEAN RAIL INSERT AND REPAIR/REINSTALL 8' OF SEAL #3 (FROM 6' TO 14' FROM MEDIAN)

SUMMARY:

–REPLACE 5⅛" CONTROL SPRINGS & DOWELS– ~~56ea.~~ ** 32ea.
–REPLACE BEARINGS– 1ea.
–ROTATE BEARINGS– 21ea.
–REPLACE SEAL #5 & #6
–CLEAN RAIL INSERT AND REPAIR/REINSTALL 8' OF SEAL #3 (FROM 6' TO 14' FROM MEDIAN)

FOR BIDDING PURPOSES: *

–REPLACE CONTROL SPRINGS @ ~~56ea.~~ ** 32ea.
–SUPPLY EXTRA CONTROL SPRINGS @ 10ea.
–REPLACE BEARINGS @ 32ea.
–ROTATE BEARINGS @ 32ea
–REPLACE SEAL #5 & #6
–CLEAN RAIL INSERT AND REPAIR/REINSTALL 8' OF SEAL #3 (FROM 6' TO 14' FROM MEDIAN)
–RE-RIVET 304 S.S. SLIDES W/ 304 S.S. RE-RIVETS @ 6ea.
–CLEAN ALL SEALS OF FOREIGN MATERIALS.

** EMERGENCY REPAIRS DURING FEBRUARY 2004 HAVE REPLACED THESE 24 UNITS. CONTRACTOR IS TO EXERCISE CAUTION WHILE REPLACING THE REMAINING UNITS SO AS NOT TO DAMAGE THESE EXISTING NEW UNITS.

* ENGINEER TO IDENTIFY ADDITIONAL WORK SCOPE BEYOND SUMMARY NOTED.

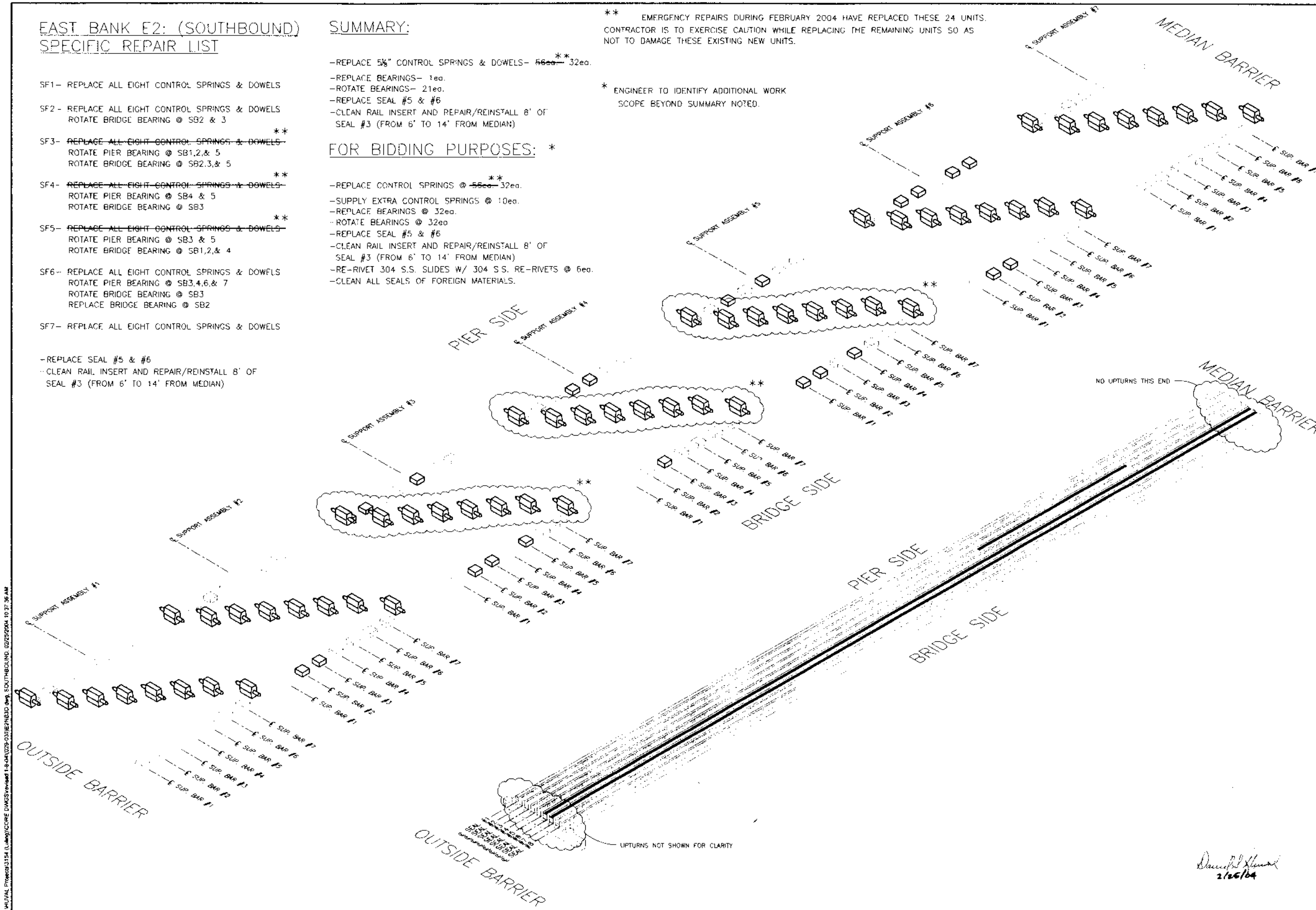

2/26/04

SHEET NUMBER	29
PARISH	ST. CHARLES
FEDERAL PROJECT	4503(509)
STATE PROJECT	450-37-0020
DESIGNED / CHECKED	MH / DT
DETAILED / CHECKED	AAJ / MH
DATE / SCALE	12-11-02 / N.T.S.

NO. DATE BY REVISION DESCRIPTION

MISSISSIPPI RIVER BRIDGE (LULING)
DECK TEST SECTION
AND JOINT REPAIRS

SPECIFIC REPAIR DETAILS
E2 SOUTHBOUND

HUVAL & ASSOCIATES, INC.
Consulting Engineers

X:\HUVAL Projects\3154 (Luling)\CORE DWGS\revised 1-9-04\(029-030)E2NB3D.dwg, SOUTHBOUND, 02/25/2004 10:37:36 AM

EAST BANK E2: (NORTHBOUND) SPECIFIC REPAIR LIST

SF1– REPLACE ALL TEN CONTROL SPRINGS & DOWELS

SF2– REPLACE ALL TEN CONTROL SPRINGS & DOWELS
ROTATE PIER BEARING @ SB9
REPLACE PIER BEARING @ SB6 & 7
ROTATE BRIDGE BEARING @ SB1,2,& 4

SF3– REPLACE ALL TEN CONTROL SPRINGS & DOWELS
ROTATE PIER BEARING @ SB5,6,8,& 9
REPLACE PIER BEARING @ SB2 & 7
ROTATE BRIDGE BEARING @ SB1,2,6,7,8,& 9
REPLACE BRIDGE BEARING @ SB4 & 5

SF4– REPLACE ALL TEN CONTROL SPRINGS & DOWELS
ROTATE PIER BEARING @ SB5 & 6
REPLACE PIER BEARING @ SB3
ROTATE BRIDGE BEARING @ SB6 & 8
REPLACE BRIDGE BEARING @ SB2

SF5– REPLACE ALL TEN CONTROL SPRINGS & DOWELS
ROTATE PIER BEARING @ SB4 & 5
REPLACE PIER BEARING @ SB6
ROTATE BRIDGE BEARING @ SB2 & 3
REPLACE BRIDGE BEARING @ SB5

SF6– REPLACE ALL TEN CONTROL SPRINGS & DOWELS
ROTATE PIER BEARING @ SB2,4,& 6
REPLACE PIER BEARING @ SB7
ROTATE BRIDGE BEARING @ SB1,3,5,& 9
REPLACE BRIDGE BEARING @ SB2

SF7– REPLACE ALL TEN CONTROL SPRINGS & DOWELS
REPLACE BRIDGE BEARING @ SB4

– CLEAN PLASTIC MOLDING/#10 SEAL RECEIVER AND REATTACH TO SUPPORT BOX # 7

– CLEAN RAIL INSERT AND REPAIR/REINSTALL SEAL #10 (FIRST 15' FROM MEDIAN)

SUMMARY:

* ENGINEER TO IDENTIFY ADDITIONAL WORK SCOPE BEYOND SUMMARY NOTED.

–REPLACE 4½" CONTROL SPRINGS & DOWELS-- 63ea.
–REPLACE BEARINGS– 13ea.
–ROTATE BEARINGS– 29ea.
–CLEAN AND RE–ATTACH PLASTIC RAIL SEAL MOLDING @ SA#7/SEAL #10
–CLEAN RAIL INSERT AND REPAIR/REINSTALL SEAL #10 (FIRST 15' FROM MEDIAN)

FOR BIDDING PURPOSES: *

–REPLACE CONTROL SPRINGS @ 63ea.
–SUPPLY EXTRA CONTROL SPRINGS @ 10ea.
–REPLACE BEARINGS @ 42ea.
–ROTATE BEARINGS @ 42ea.
–CLEAN RAIL INSERT AND REPAIR/REINSTALL SEAL #10 (FIRST 15' FROM MEDIAN)
–RE–RIVET 304 S.S. SLIDES W/ 304 S.S. RE–RIVETS @ 4ea.
–CLEAN AND RE–ATTACH PLASTIC RAIL SEAL MOLDING @ SA#7/SEAL #10
–CLEAN ALL SEALS OF FOREIGN MATERIALS.

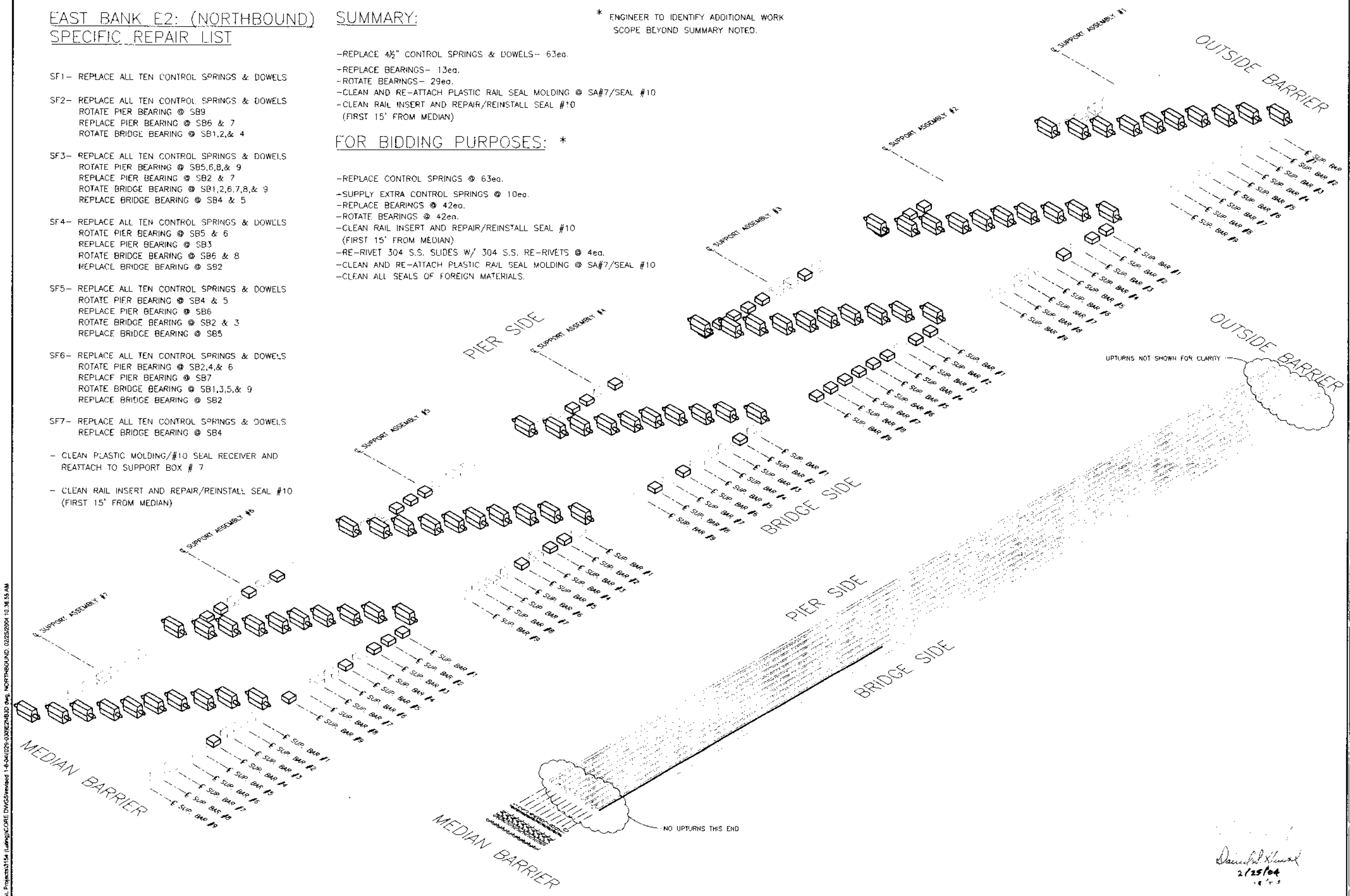

2/25/04

SHEET NUMBER	30
PARISH	ST. CHARLES
FEDERAL PROJECT	4503(509)
STATE PROJECT	450-37-0020
DESIGNED / CHECKED	MH / DT
DETAILED / CHECKED	AAJ / MH
DATE / SCALE	12-11-02 / N.T.S.

NO. | DATE | REVISION DESCRIPTION | BY

MISSISSIPPI RIVER BRIDGE (LULING)
DECK TEST SECTION
AND JOINT REPAIRS

SPECIFIC REPAIR DETAILS
E2 NORTHBOUND

HUVAL & ASSOCIATES, INC.
Consulting Engineers

X:\HUVAL Projects\3154 (Luling)\CORE DWGS\revised 1-8-04\025-030\E2NB3D.dwg, NORTHBOUND, 02/25/2004 10:36:55 AM

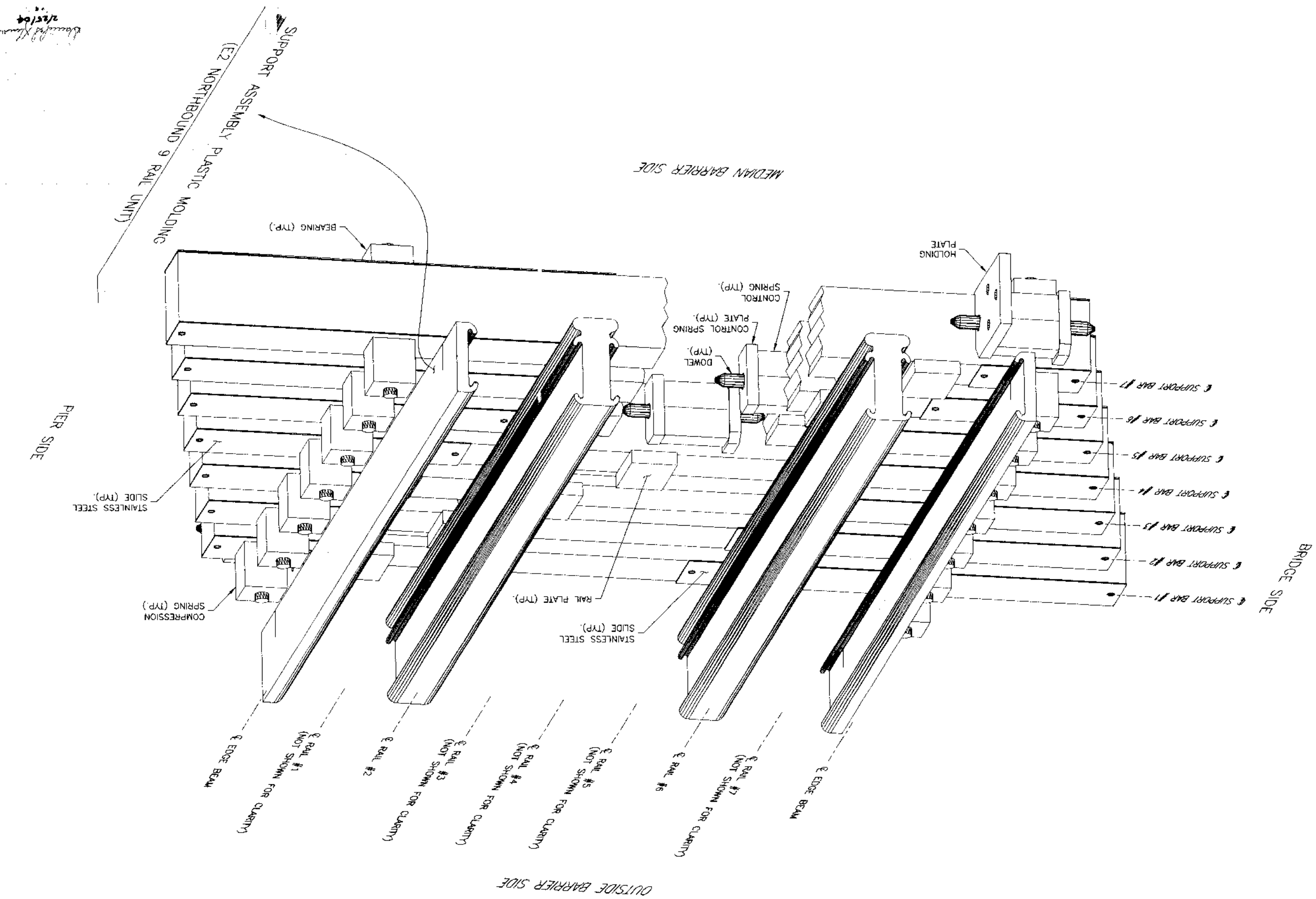

HUVAL & ASSOCIATES, INC.
Consulting Engineers

MISSISSIPPI RIVER BRIDGE (LULING)
EMERGENCY E2 JOINT REPAIRS
SOUTHBOUND & NORTHBOUND

E2 UNIT
COMPONENT IDENTIFICATION

NO.	DATE	REVISION DESCRIPTION	BY

DESIGNED	MAH	PARISH	ST. CHARLES
CHECKED	DT		
DETAILED	BKH	FEDERAL PROJECT	450(35)(50)
CHECKED	MAH		
DATE	11-25-03	STATE PROJECT	450-37-0020
SCALE	NONE		

SHEET NUMBER 31

K:\HUVAL Projects\1154 (Luling)\COMB DWGS\Revised 1-8-04\031-NEW.DWG, Layout1, 02/25/2004 10:39:56 AM

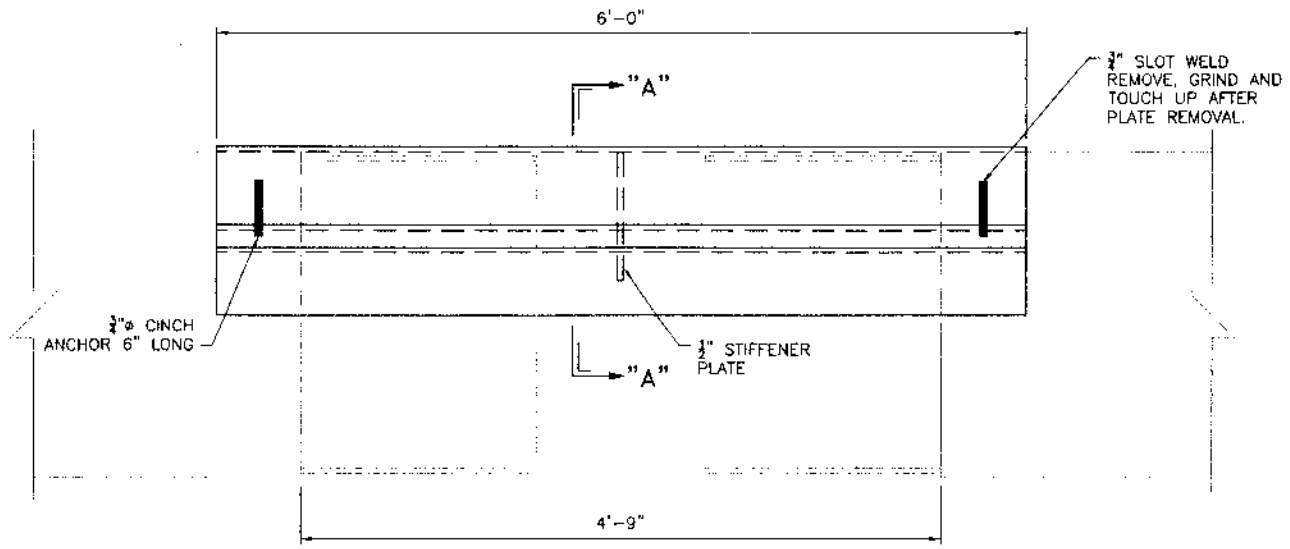

PLAN
SCALE: 1½"=1'-0"

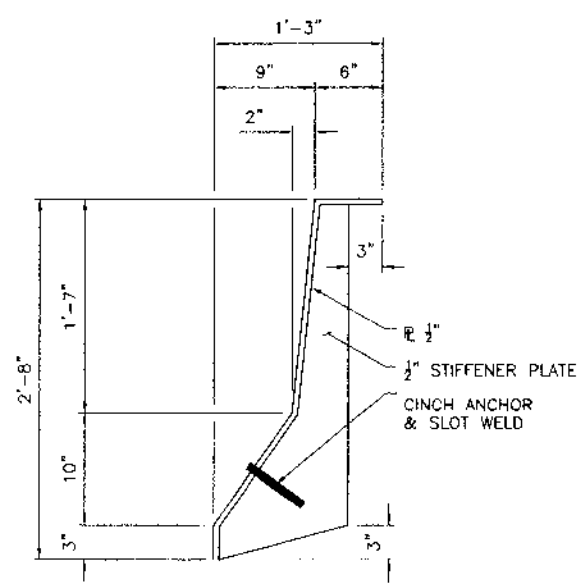

SECTION "A-A"
SCALE: 1½"=1'-0"

GENERAL NOTE:
CONTRACTOR IS ADVISED THAT REMOVAL OF THE EXISTING MEDIAN BARRIER SLIDING PLATE ASSEMBLY IS REQUIRED FOR E1 WORK. THIS REMOVAL WILL EXPOSE BOTH SIDES OF THE FIXED MEDIAN BARRIER PROVIDING AN UNACCEPTABLE SNAG CONDITION FOR TRAFFIC IF SOUTHBOUND AND NORTHBOUND INSIDE LANES ARE NOT WORKED CONCURRENTLY. TRAFFIC WILL NOT BE ALLOWED IN EITHER INSIDE LANE WITH A MEDIAN SNAG EXPOSURE. TEMPORARY COVER PLATE PER THIS SHEET OR APPROVED EQUAL MUST BE PROVIDED.

CONTRACTOR TO SUBMIT FOR APPROVAL PLANNED SEQUENCING AND MEDIAN BARRIER PROVISIONS PROPOSED.

2/25/04

SHEET NUMBER	32
PARISH	ST. CHARLES
FEDERAL PROJECT	4503(509)
STATE PROJECT	450-37-0020
DESIGNED / CHECKED	MH / DT
DETAILED / CHECKED	BMH / MH
DATE / SCALE	01-28-04 / NOTED

NO.	DATE	REVISION DESCRIPTION	BY

MISSISSIPPI RIVER BRIDGE (LULING)
DECK TEST SECTION
AND JOINT REPAIRS

MEDIAN BARRIER
TEMPORARY COVER PLATE

HUVAL & ASSOCIATES, INC.
Consulting Engineers

X:\HUVAL Projects\3154 (Luling)\CORE DWGS\revised 1-9-04\(32)Temporary Cover Plate.dwg, Layout1, 02/25/2004 10:42:42 AM

SPECIFICATIONS OF NB/SB JOINT E1:

1.) WABO STR-1800 MODULAR EXPANSION JOINT, HS-20 DESIGN - 30% IMPACT LOADING
FIVE RAIL 2½"X5" RAILS/1¾"X4" EDGE BEAMS/SIX STRIP-SEAL ELEMENTS

2.) CONCRETE - SFRC - SEE SPECIFICATION ITEM S-106 (NO DIRECT PAYMENT)

3.) REINFORCING STEEL - ASTM-A615 GRADE 60 (NO DIRECT PAYMENT)

4.) EPOXY UNDERLAYMENT - TYPE "B" - SEE SPECIFICATION ITEM S-105 MODIFIED FOR MANUAL/HAND APPLICATION (NO DIRECT PAYMENT)

5.) WELDING: ANSI/AASHTO/AWS D1.5-95

6.) STRUCTURAL STEEL (NO DIRECT PAYMENT):
a.) PLATES AND SHIMS - ASTM-A709 GRADE 50W WEATHERING STEEL-UNPAINTED STEEL
b.) JOINT E1 - WABO - ASTM-A705 GRADE 50W WEATHERING STEEL

7.) PAINT ON JOINT E1 - THREE COAT WATERBORNE PAINT SYSTEM PER DOTD SECTION 811.
APPROACH SIDE: PAINT ALL EXPOSED STEEL SURFACES NOT IN CONTACT WITH CONCRETE.
BRIDGE SIDE: PAINT ALL EXPOSED STEEL SURFACES EXCEPT SUPPORT ASSEMBLY BOX ½" PLATE TOP & FILLER ½" PLATE TOP. THESE AREAS ARE TO BE DESCRIBED ON SHOP DRAWINGS.

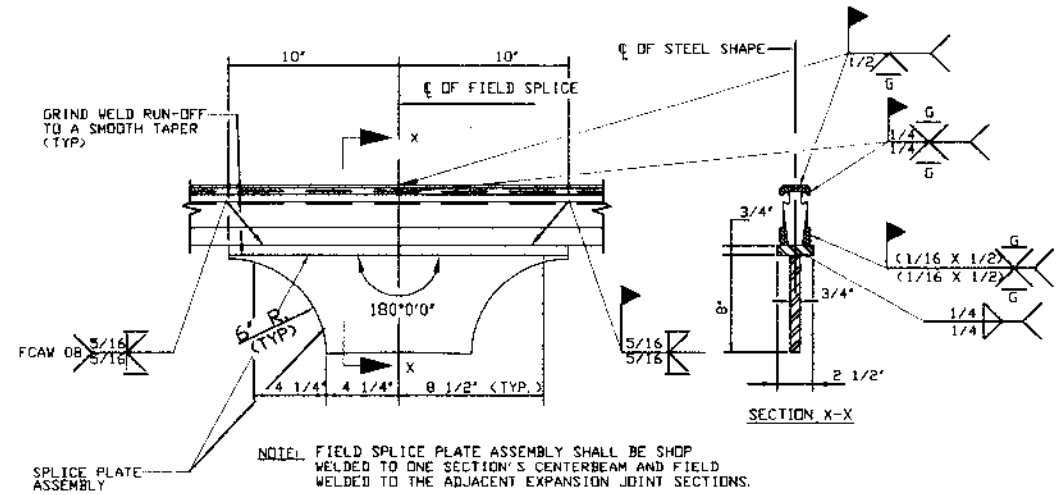

NOTE: FIELD SPLICE PLATE ASSEMBLY SHALL BE SHOP WELDED TO ONE SECTION'S CENTERBEAM AND FIELD WELDED TO THE ADJACENT EXPANSION JOINT SECTIONS.

CENTER BEAM FIELD WELD

N. T. S.

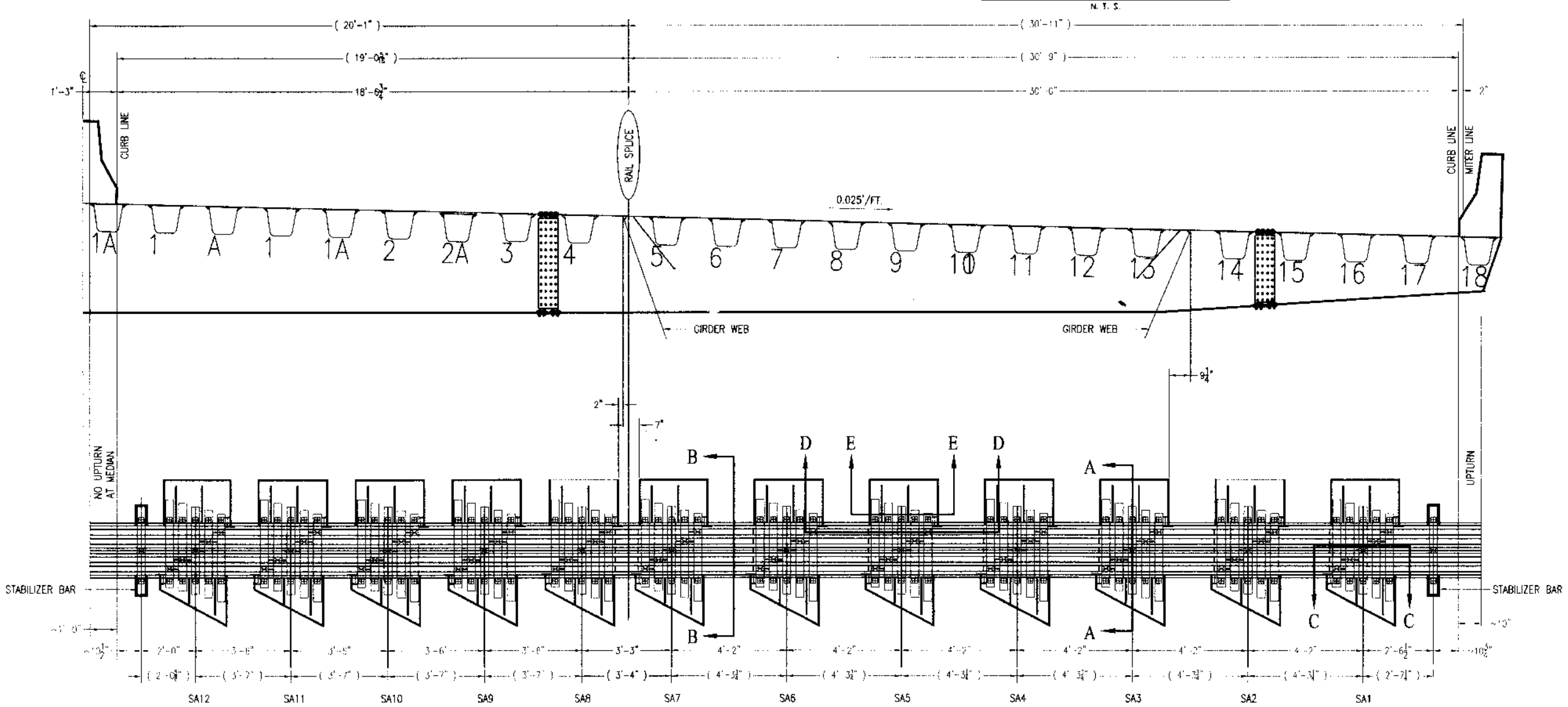

NORTHBOUND ROADWAY CROSS SECTION & PLAN VIEW OF NEW E1 JOINT

SCALE: ½"=1'-0"

NOTES:
1.) SA2 & SA8 HAVE NO BACK PLATE.
2.) LAYOUT DIMENSIONS/SPACING ARE NORMAL TO DECK & PRELIMINARY. FINAL DIMENSIONS WILL BE DETERMINED DURING SHOP DRAWING PREPARATION.
3.) MITER LINE-TO-CURB 2" DIMENSION (OUTSIDE BARRIER) CONTROLS LAYOUT SETTING.
4.) SUPPORT ASSEMBLY (BOXES) SIDES MUST CLEAR GIRDER WEBS MINIMUM 3".
5.) DIMENSIONS IN ( ) DENOTE FABRICATION DIMENSIONS NORMAL TO DECK SLOPE.

2/25/04

SHEET NUMBER 33

ST CHARLES | PARISH | DESIGNED | CHECKED | DETAILED | CHECKED | DATE | SCALE

4500(509) FEDERAL PROJECT | STATE PROJECT

450-37-0020

MIN OF DOTD | DRN MM | 01-28-04 NOTED

NO. | DATE | REVISION DESCRIPTION

MISSISSIPPI RIVER BRIDGE (LULING)
DECK TEST SECTION AND JOINT REPAIRS

NORTHBOUND ROADWAY
E1 CROSS SECTION & PLAN VIEW

HUVAL & ASSOCIATES, INC. Consulting Engineers

J:\HUVAL Projects\3184 (Luling)\CORE DWGS\revised 1-8-04\033-03-01E1dims.dwg 033, 02/25/2004 10:43:13 AM

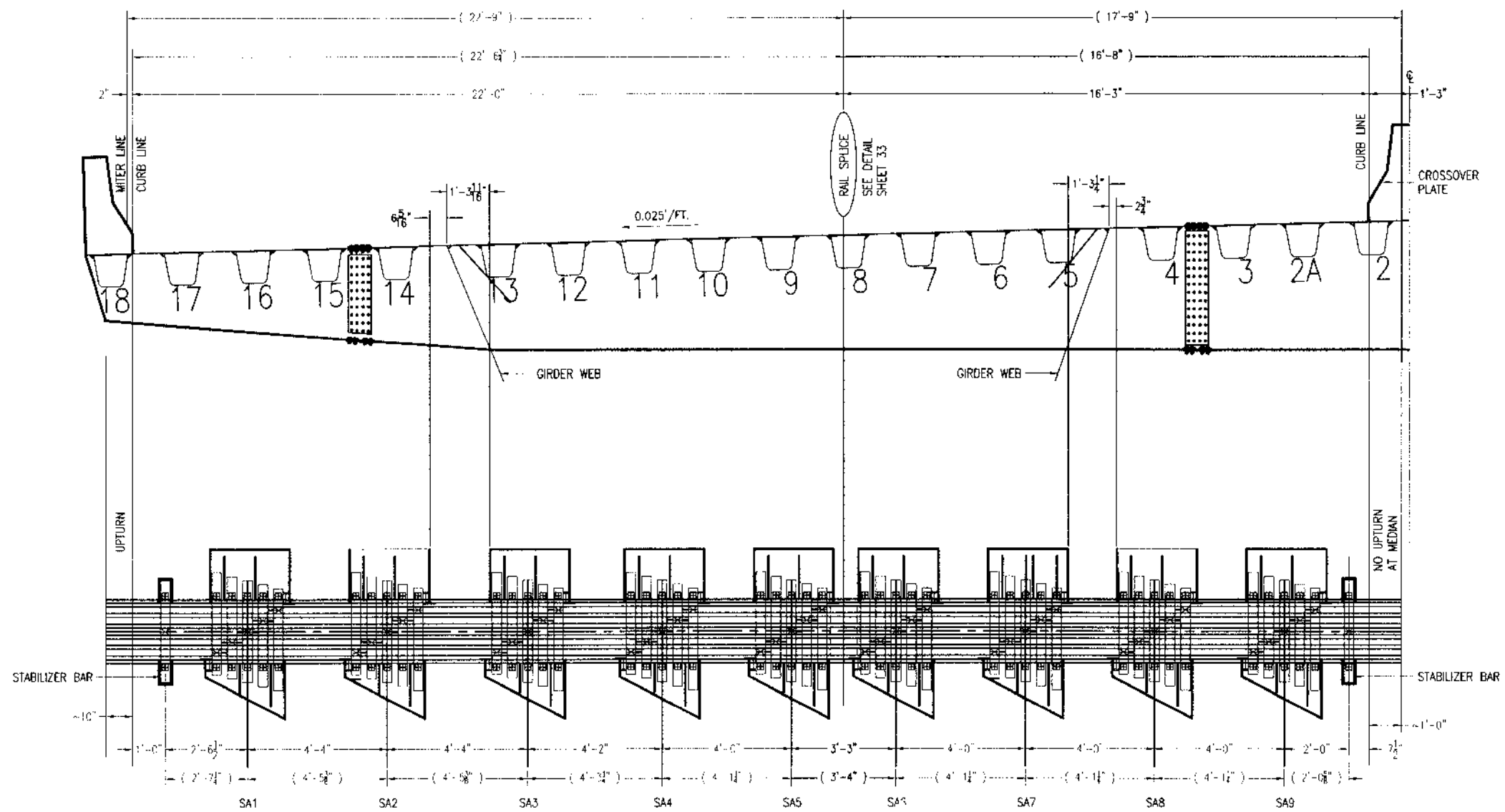

SOUTHBOUND ROADWAY
CROSS SECTION & PLAN VIEW
OF NEW E1 JOINT

SCALE: 1/2"=1'-0"

NOTES:

1.) SA2 & SA8 HAVE NO BACK PLATE.
2.) LAYOUT DIMENSIONS/SPACING ARE PRELIMINARY. FINAL DIMENSIONS WILL BE DETERMINED DURING SHOP DRAWING PREPARATION.
3.) MITER LINE-TO-CURB 2" DIMENSION (OUTSIDE BARRIER) CONTROLS LAYOUT SETTING.
4.) SUPPORT ASSEMBLY (BOXES) SIDES MUST CLEAR GIRDER WEBS BY MINIMUM 3".
5.) DIMENSIONS IN ( ) DENOTE FABRICATION DIMENSIONS NORMAL TO DECK SLOPE.

2/25/04

SHEET NUMBER	34
PARISH	ST. CHARLES
FEDERAL PROJECT	4503(509)
STATE PROJECT	450-37-0020
DESIGNED / CHECKED	MH / DT
DETAILED / CHECKED	BKW / MH
DATE / SCALE	01-28-04 / NOTED

NO.	DATE	REVISION DESCRIPTION	BY

MISSISSIPPI RIVER BRIDGE (LULING)
DECK TEST SECTION
AND JOINT REPAIRS

SOUTHBOUND ROADWAY
E1 CROSS SECTION & PLAN VIEW

HUVAL & ASSOCIATES, INC.
Consulting Engineers

X:\HUVAL Projects\3154 (Luling)\CORE DWGS\revised 1-8-04\033-034\E1dens.dwg, D34, 02/25/2004 10:43:47 AM

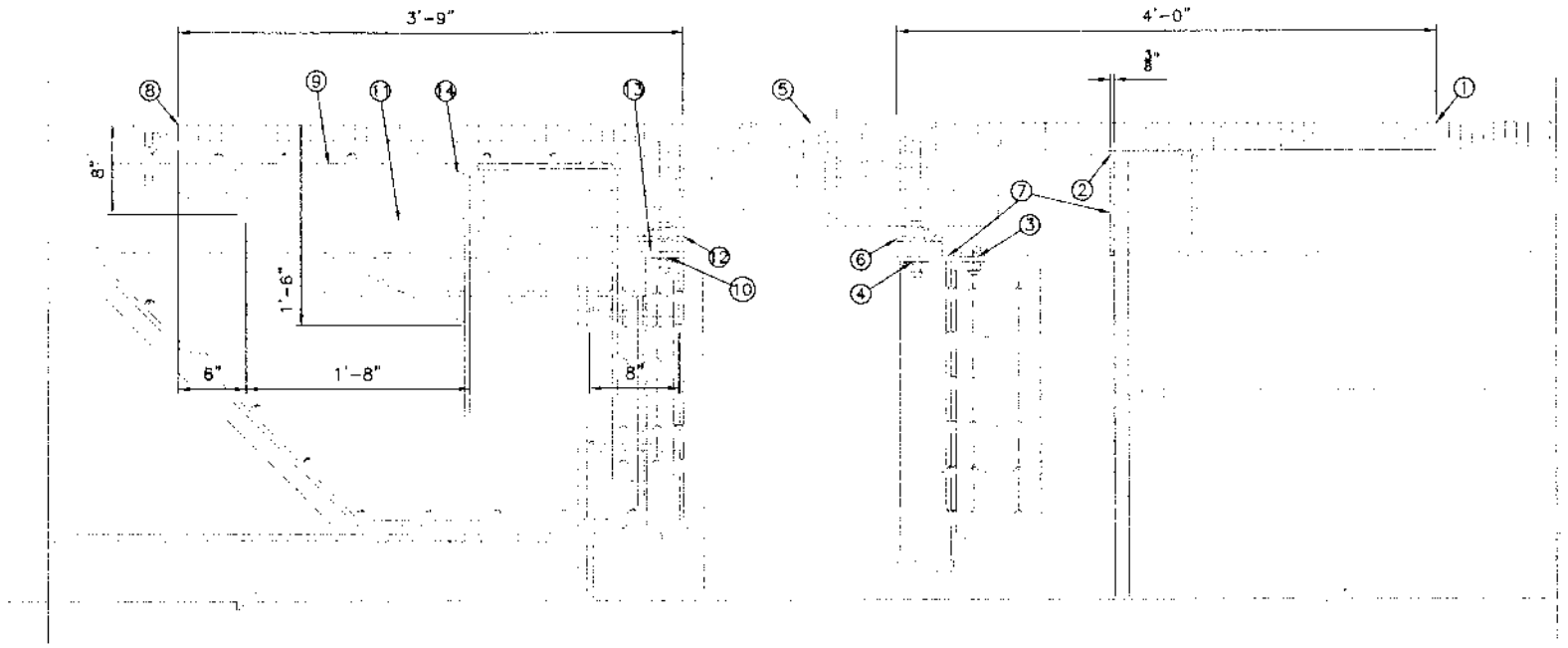

SECTION "A-A"
SHOWING ITEMS TO BE REMOVED

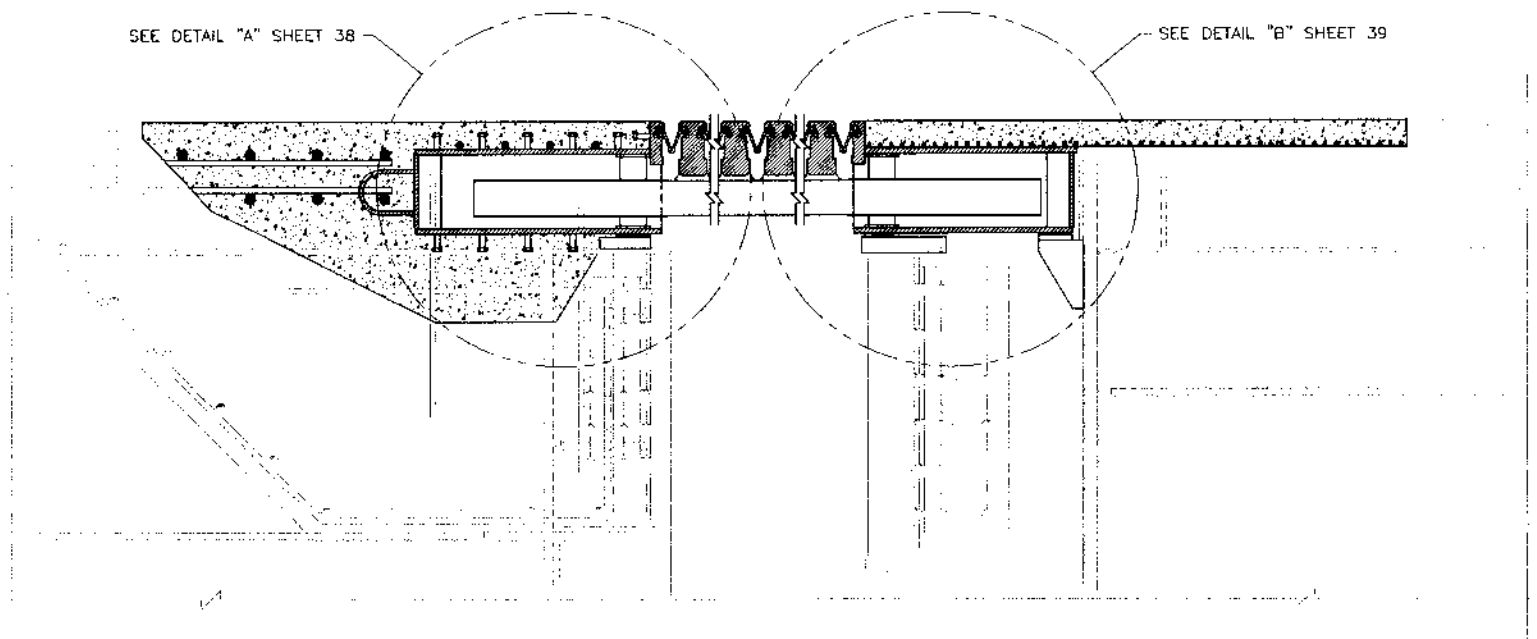

SECTION "A-A"
SHOWING ITEMS TO BE ADDED

MAJOR WORK ACTIVITIES

BRIDGE SIDE

1. SAWCUT WITHIN ½" OF DECK PLATE AND REMOVE EXISTING PMAC 4'-0" FROM E1 EDGE BEAM.
2. CUT/BEVEL EXISTING 7/16" DECK PLATE, SPLICE PLATE, AND 9" RIBS ⅜" FROM BRIDGE DIAPHRAGM SURFACE.
3. UNBOLT OR CUT RIB BOLT FROM ½"x8" SUPPORT PLATE – DO NOT DAMAGE PLATE!
4. UNBOLT OR CUT E1 SUPPORT BAR FRAME BOLT FROM ½"x8" SUPPORT PLATE – DO NOT DAMAGE PLATE!
5. CUT EXISTING RAILS & EDGE BEAMS.
6. REMOVE E1 & SUPPORT BARS/BOXES, DECK END DAM, EDGE BEAMS, RAILS, SEALS, DECK, RIBS, AND 1⅜"x4" SPACER PLATES AND SHIMS.
7. MECHANICALLY CLEAN TOP OF FLANGE PLATE & DRESS CUT DECK PLATE AND RIB EDGES..

APPROACH SIDE

8. SAWCUT CONCRETE AT EDGE ANGLE & REMOVE APPROACH CONCRETE AS REQUIRED.
9. EXPOSE AND CLEAN EXISTING REBAR TO REMAIN.
10. UNBOLT OR CUT E1 SUPPORT BAR FRAME BOLT FROM ½"x5" SUPPORT PLATE.
11. COMPLETE REMOVAL OF EXISTING ROAD SURFACE AND APPROACH CONCRETE A MINIMUM OF 1'-0" DEEP AND 3'-0" BACK FROM E1 EDGE BEAM.
12. REMOVE E1 SUPPORT BARS/BOXES, EDGE BEAMS, BULKHEADS, RAILS, SEALS, SHIMS, AND 1"x4" SPACER PLATE.
13. MECHANICALLY CLEAN TOP OF ½"x5" FLANGE PLATE.
14. CUT REBAR AS REQUIRED AND DRESS OUT REBAR TO REMAIN.

LEGEND

- ITEMS TO BE REMOVED
- NEW CONCRETE
- WATSON BOWMAN SUPPLIED

David R. Hurd
2/25/04

SHEET NUMBER	35
PARISH	ST. CHARLES
FEDERAL PROJECT	4503(503)
STATE PROJECT	450-37-0020
DESIGNED / CHECKED	MH / DT
DETAILED / CHECKED	BKH / MH
DATE / SCALE	01-28-04 / 1-1/2"=1'-0"

NO.	DATE	REVISION DESCRIPTION	BY

MISSISSIPPI RIVER BRIDGE (LULING)
DECK TEST SECTION
AND JOINT REPAIRS

SUPPORT ASSEMBLY
SECTION "A-A"

HUVAL & ASSOCIATES, INC.
Consulting Engineers

X:\HUVAL Projects\3154 (Luling)\CORE DWGS\revised 1-8-04\035-0419\Support Assembly.dwg, Section A-A (Thru-Box), 02/25/2004 10:44:43 AM

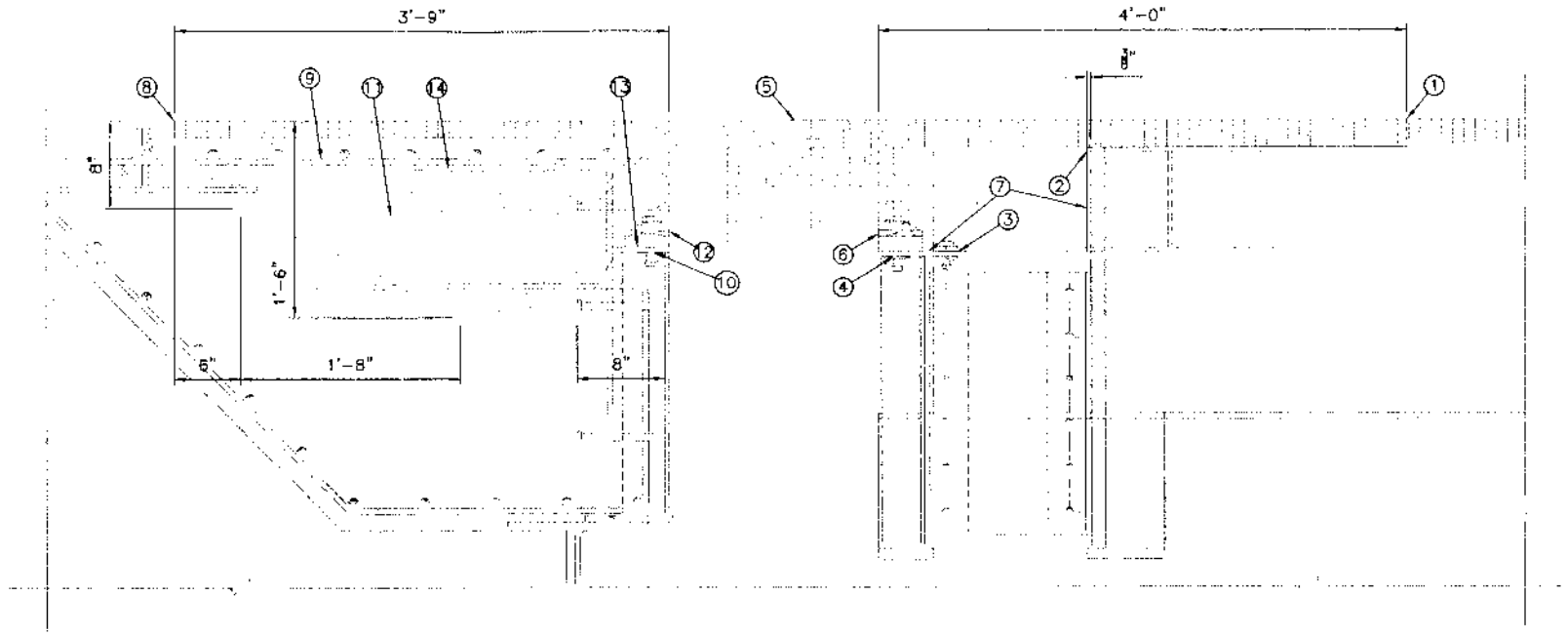

SECTION "B-B"
SHOWING ITEMS TO BE REMOVED

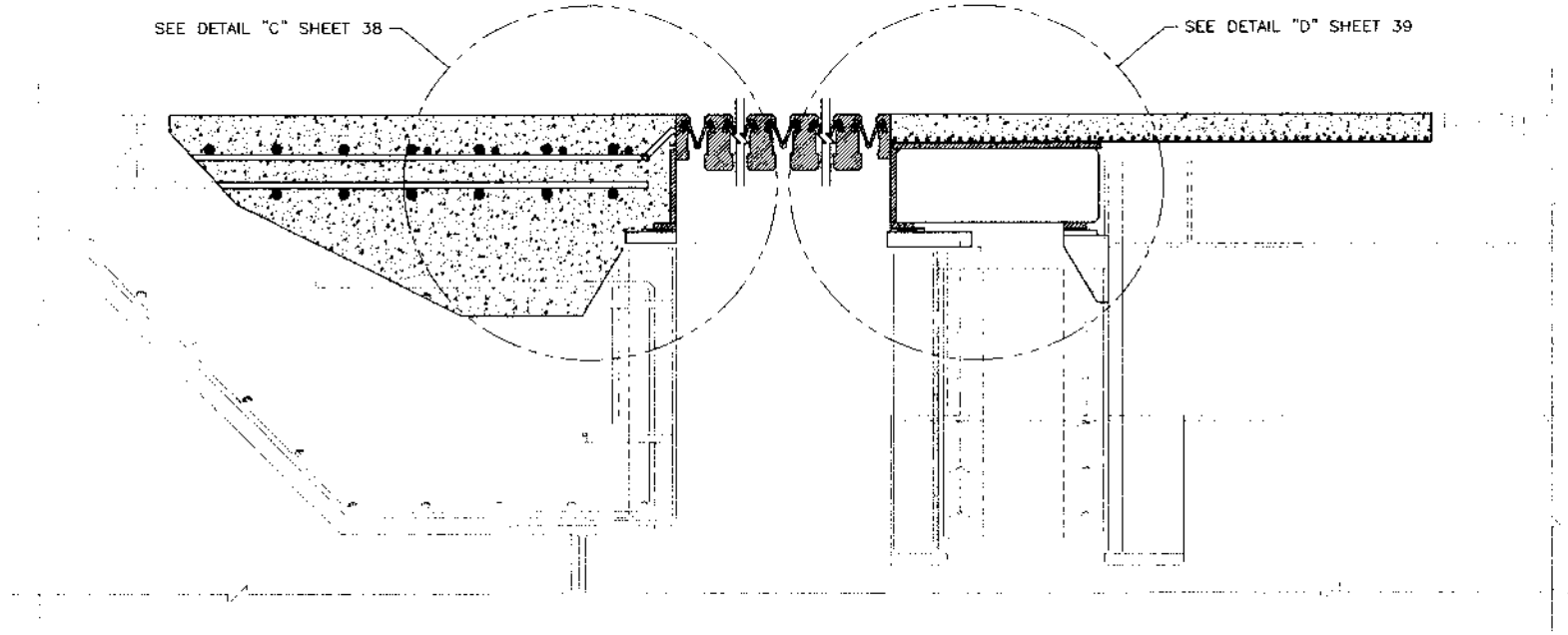

SECTION "B-B"
SHOWING ITEMS TO BE ADDED

MAJOR WORK ACTIVITIES

BRIDGE SIDE

1. SAWCUT WITHIN ½" OF DECK PLATE AND REMOVE EXISTING PMAC 4'-0" FROM E1 EDGE BEAM.
2. CUT/BEVEL EXISTING 7/16" DECK PLATE, SPLICE PLATE, AND 9" RIBS ⅜" FROM BRIDGE DIAPHRAGM SURFACE.
3. UNBOLT OR CUT RIB BOLT FROM ½"x8" SUPPORT PLATE – DO NOT DAMAGE PLATE!
4. UNBOLT OR CUT E1 SUPPORT BAR FRAME BOLT FROM ½"x8" SUPPORT PLATE – DO NOT DAMAGE PLATE!
5. CUT EXISTING RAILS & EDGE BEAMS.
6. REMOVE E1 & SUPPORT BARS/BOXES, DECK END DAM, EDGE BEAMS, RAILS, SEALS, DECK, RIBS, AND 1⅛"x4" SPACER PLATES AND SHIMS.
7. MECHANICALLY CLEAN TOP OF FLANGE PLATE & DRESS CUT DECK PLATE AND RIB EDGES..

APPROACH SIDE

8. SAWCUT CONCRETE AT EDGE ANGLE & REMOVE APPROACH CONCRETE AS REQUIRED.
9. EXPOSE AND CLEAN EXISTING REBAR TO REMAIN.
10. UNBOLT OR CUT E1 SUPPORT BAR FRAME BOLT FROM ½"x5" SUPPORT PLATE.
11. COMPLETE REMOVAL OF EXISTING ROAD SURFACE AND APPROACH CONCRETE A MINIMUM OF 1'-0" DEEP AND 3'-0" BACK FROM E1 EDGE BEAM.
12. REMOVE E1 SUPPORT BARS/BOXES, EDGE BEAMS, BULKHEADS, RAILS, SEALS, SHIMS, AND 1"x4" SPACER PLATE.
13. MECHANICALLY CLEAN TOP OF ½"x5" FLANGE PLATE.
14. CUT REBAR AS REQUIRED AND DRESS OUT REBAR TO REMAIN.

LEGEND

- ITEMS TO BE REMOVED
- NEW CONCRETE
- WATSON BOWMAN SUPPLIED

2/25/04

SHEET NUMBER	36
PARISH	ST. CHARLES
FEDERAL PROJECT	4503(509)
STATE PROJECT	450-37-0020
DESIGNED / CHECKED	VH / DT
DETAILED / CHECKED	BKH / MH
DATE / SCALE	01-28-04 / 1-1/2"=1'-0"

NO.	DATE	REVISION DESCRIPTION	BY

MISSISSIPPI RIVER BRIDGE (LULING)
DECK TEST SECTION
AND JOINT REPAIRS

SUPPORT ASSEMBLY
SECTION "B-B"

HUVAL & ASSOCIATES, INC.
Consulting Engineers

X:\HUVAL Projects\3154 (Luling)\CORE DWGS\revised 1-8-04\035-041\Support Assembly.dwg, Section B-B (Between-Boxes), 02/25/2004 10:43:11 AM

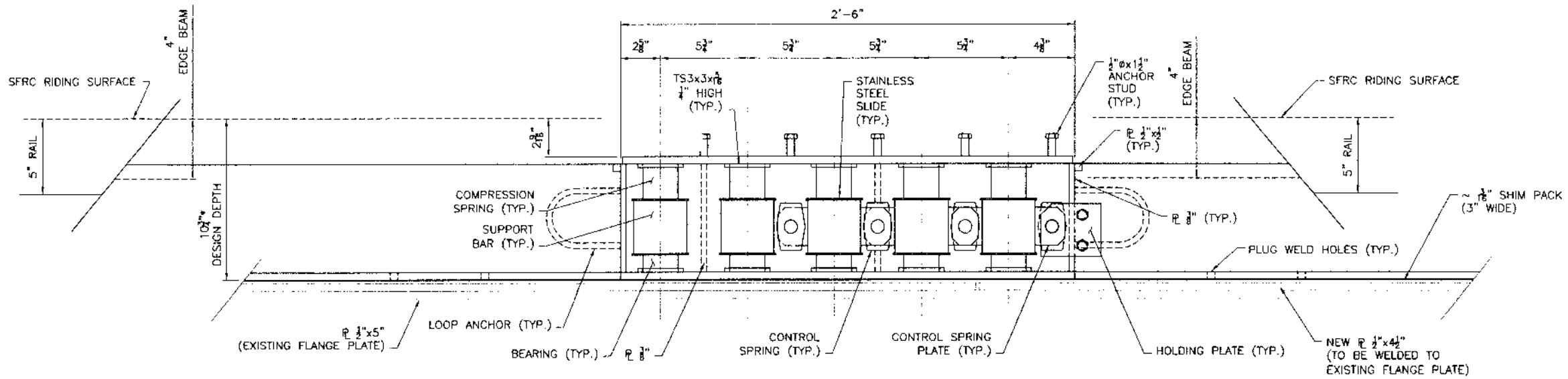

SECTION "C-C"

FACING APPROACH SIDE

SPECIAL NOTE:
EXISTING 1" SPACER PLATE REDUCES IN THICKNESS IN OUTSIDE PORTION OF APPROACH SIDE ROADWAY BEAM. OUTSIDE 8 1/2'± OF NEW 1/2"x4 1/2" SPACER PLATE FOR BOTH SIDES OF BRIDGE APPROACH SIDE (SOUTHBOUND & NORTHBOUND) TO BE LIKEWISE REDUCED IN THICKNESS AS REQUIRED TO ALLOW USE OF 3" WIDE SHIM PACK. CONTRACTOR TO FIELD SURVEY & PROVIDE SIZES AND MAXIMUM CONTINUOUS LENGTHS OF NEW SPACER PLATES AS POSSIBLE.

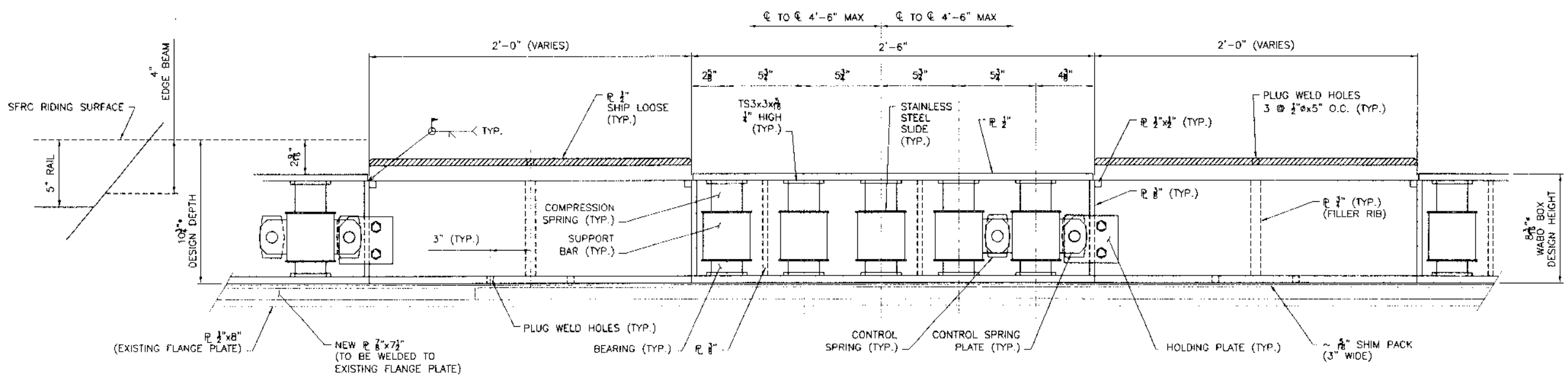

SECTION "D-D"

FACING BRIDGE SIDE

SPECIAL NOTE:
CONTRACTOR TO FIELD SURVEY ACTUAL THICKNESS OF EXISTING SPACER PLATE AND ADJUST NEW SPACER PLATE THICKNESS AS REQUIRED TO MAINTAIN 3" WIDE (SEE SHEET 39) SHIM PACK USE. NEW SPACER PLATE LENGTHS TO BE MAXIMIZED AS MUCH AS PRACTICAL.

***GENERAL NOTE:**
EXPANSION JOINT SUPPORT ASSEMBLY DIMENSIONS SUBJECT TO FINAL DESIGN AND APPROVAL FROM WATSON BOWMAN.

2/23/04

SHEET NUMBER 37

ST. CHARLES | PARISH
4503(509) | FEDERAL PROJECT
450-37-0020 | STATE PROJECT

MH 37 | DESIGNED CHECKED
BKH MH | DETAILED CHECKED
01-28-04 3"=1'-0" | DATE SCALE

NO. | DATE | REVISION DESCRIPTION | BY

MISSISSIPPI RIVER BRIDGE (LULING)
DECK TEST SECTION
AND JOINT REPAIRS

SUPPORT ASSEMBLY
SECTIONS "C-C" AND "D-D"

HUVAL & ASSOCIATES, INC.
Consulting Engineers

X:\HUVAL Projects\3154 Luling\CORE DWGS\version2 1-8-04\0235-0411\Support Assembly Dwg. Section C-C and Section D-D, 02/27/2004 02:12:54 PM

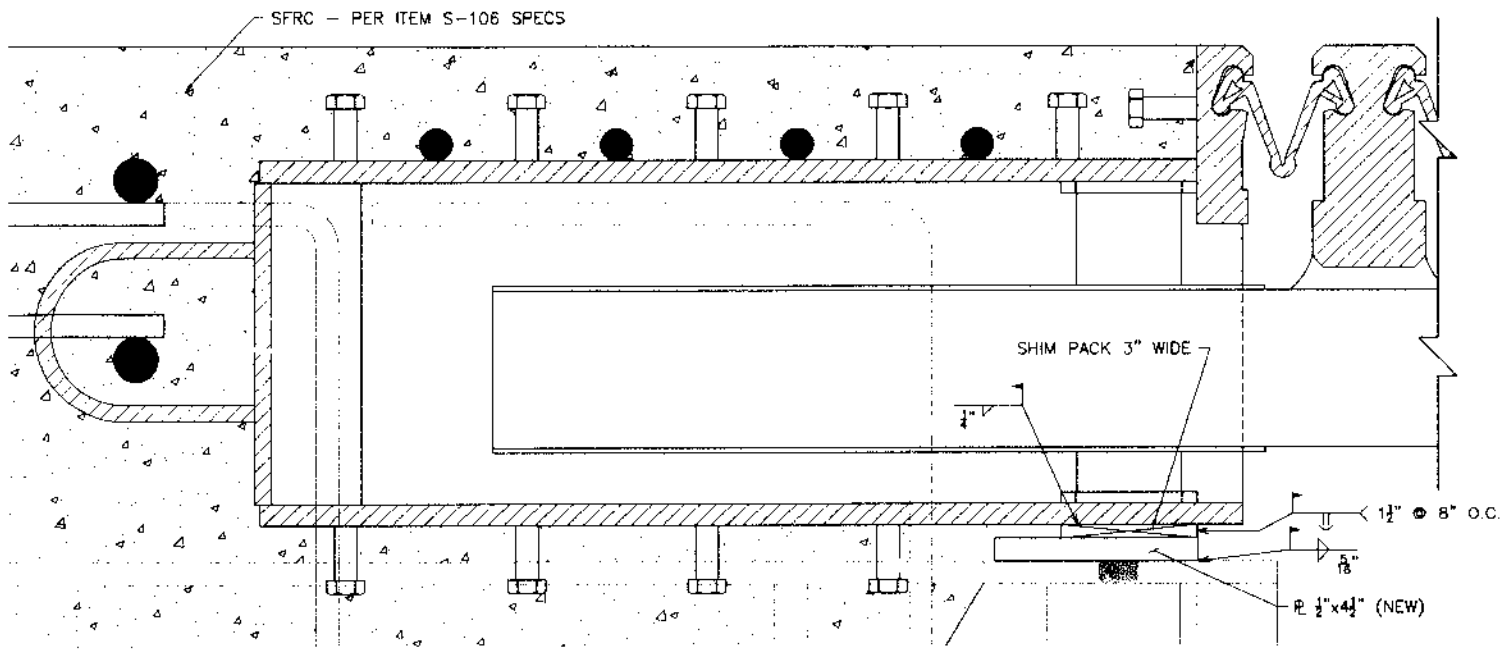

DETAIL "A"
APPROACH SIDE

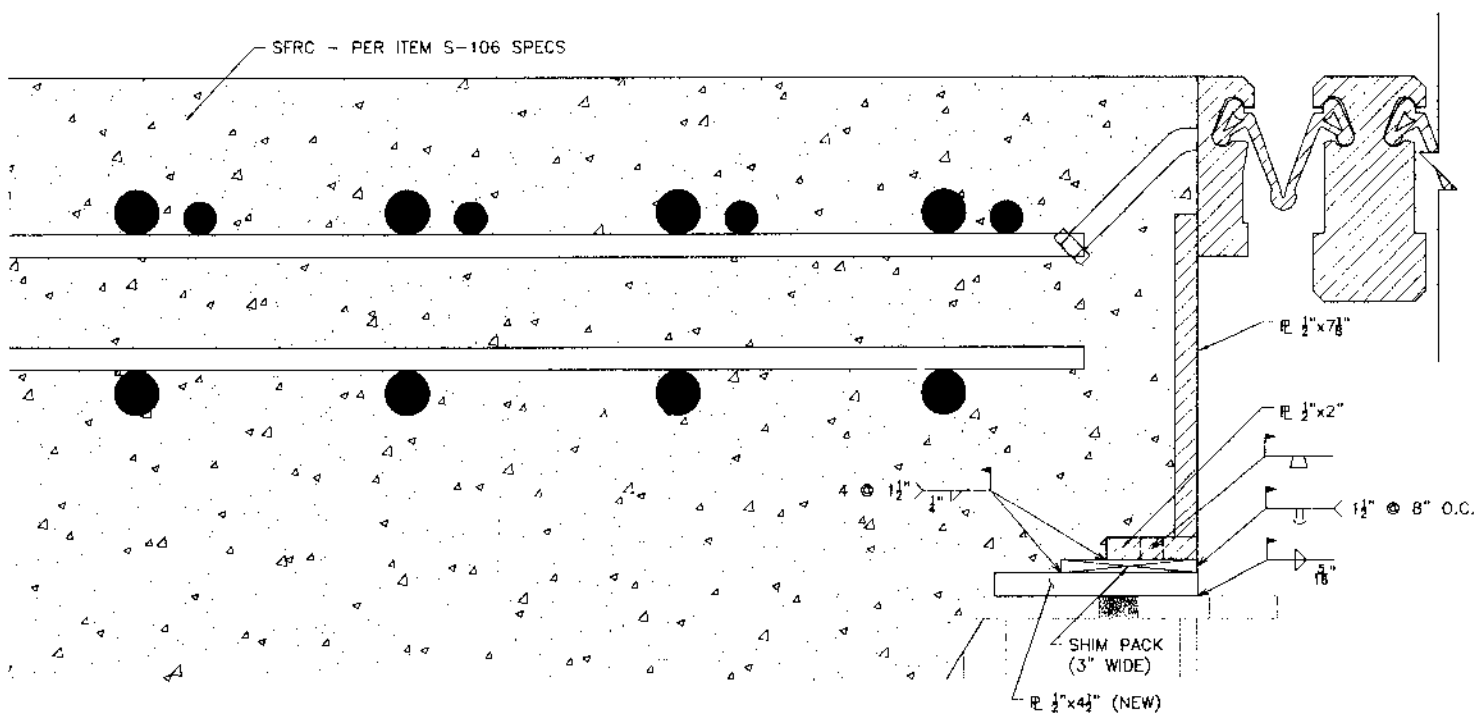

DETAIL "C"
APPROACH SIDE

LEGEND:

- ADDED TRANSVERSE #6's
- ADDED TRANSVERSE #3's
- WATSON BOWMAN SUPPLIED

David S. Huval
2/25/04

SHEET NUMBER	38		
PARISH	ST. CHARLES		
FEDERAL PROJECT	4503(509)		
STATE PROJECT	450-37-0020		
DESIGNED	MAN		
CHECKED	DT		
DETAILED	BKH		
CHECKED	MH		
DATE	01-28-04		
SCALE	6"=1'-0"		

NO.	DATE	REVISION DESCRIPTION	BY

MISSISSIPPI RIVER BRIDGE (LULING)
DECK TEST SECTION
AND JOINT REPAIRS

SUPPORT ASSEMBLY
DETAILS "A" AND "C"

HUVAL & ASSOCIATES, INC.
Consulting Engineers

X:\HUVAL Projects\3154 (Luling)\CORE DWG\Reviewed 1-8-04\055-04-1\Support Assembly.dwg, Details A and C 02/27/2004 02:13:17 PM

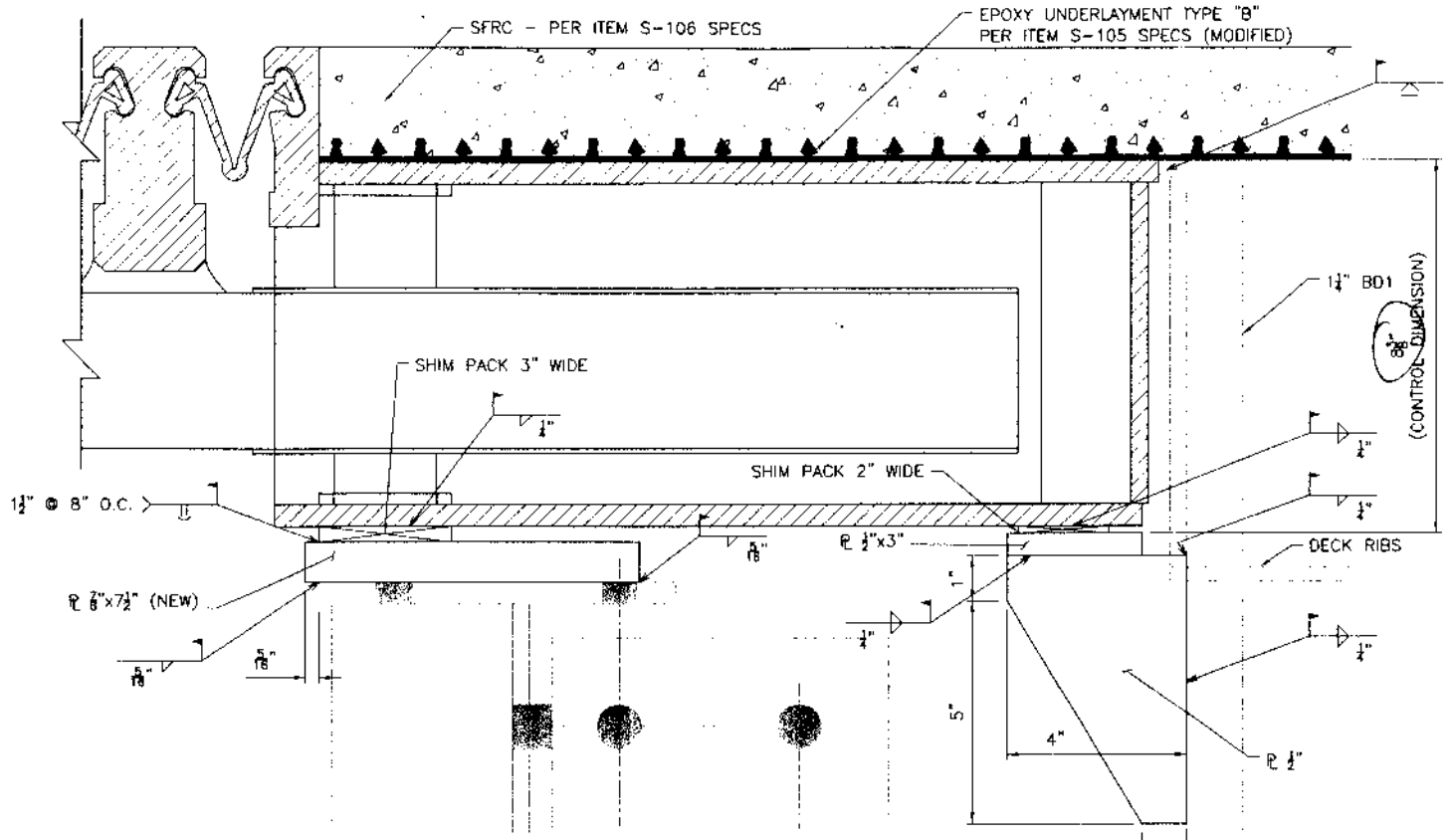

DETAIL "B"
BRIDGE SIDE
SCALE: 6"=1'-0"

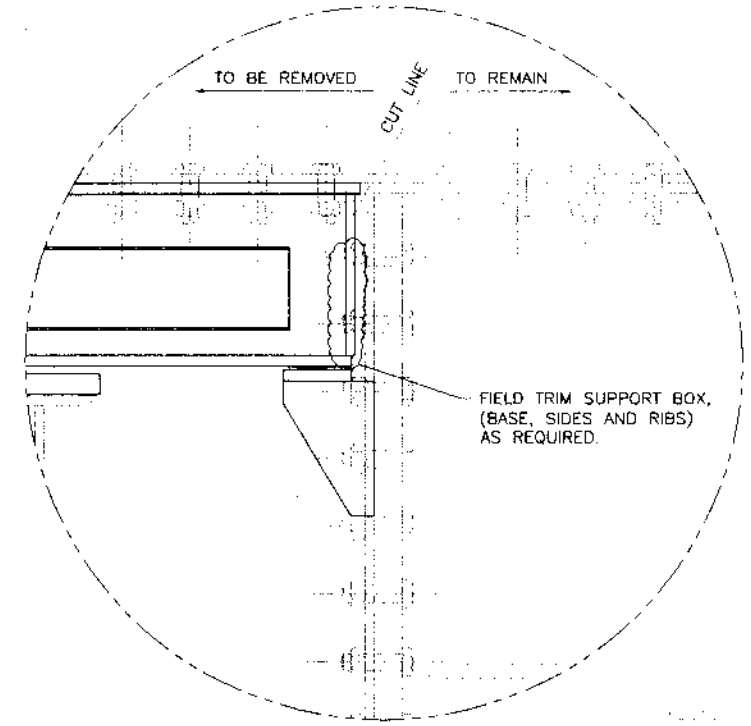

SECTION AT DECK SPLICE
(AT SUPPORT ASSEMBLY)
SCALE: 3"=1'-0"

~ 3/16" SHIM PACK – 2" WIDE
(BRIDGE SIDE AT BD1)
PL 3/16"x2"
PL ⅛"x2"
PL 3/16"x2"
(LENGTH AS NEEDED)

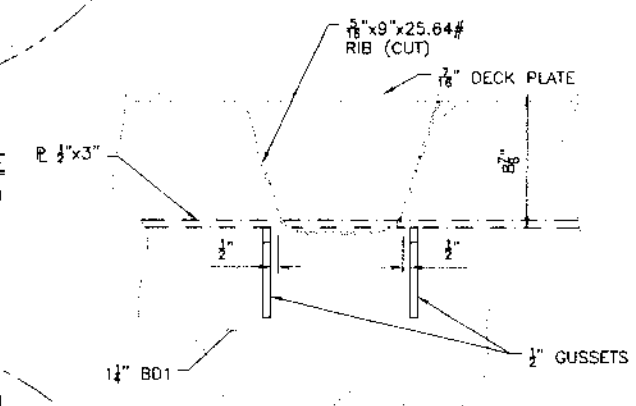

TYPICAL BD1 GUSSET
INSTALLATIONS
SCALE: 2"=1'-0"

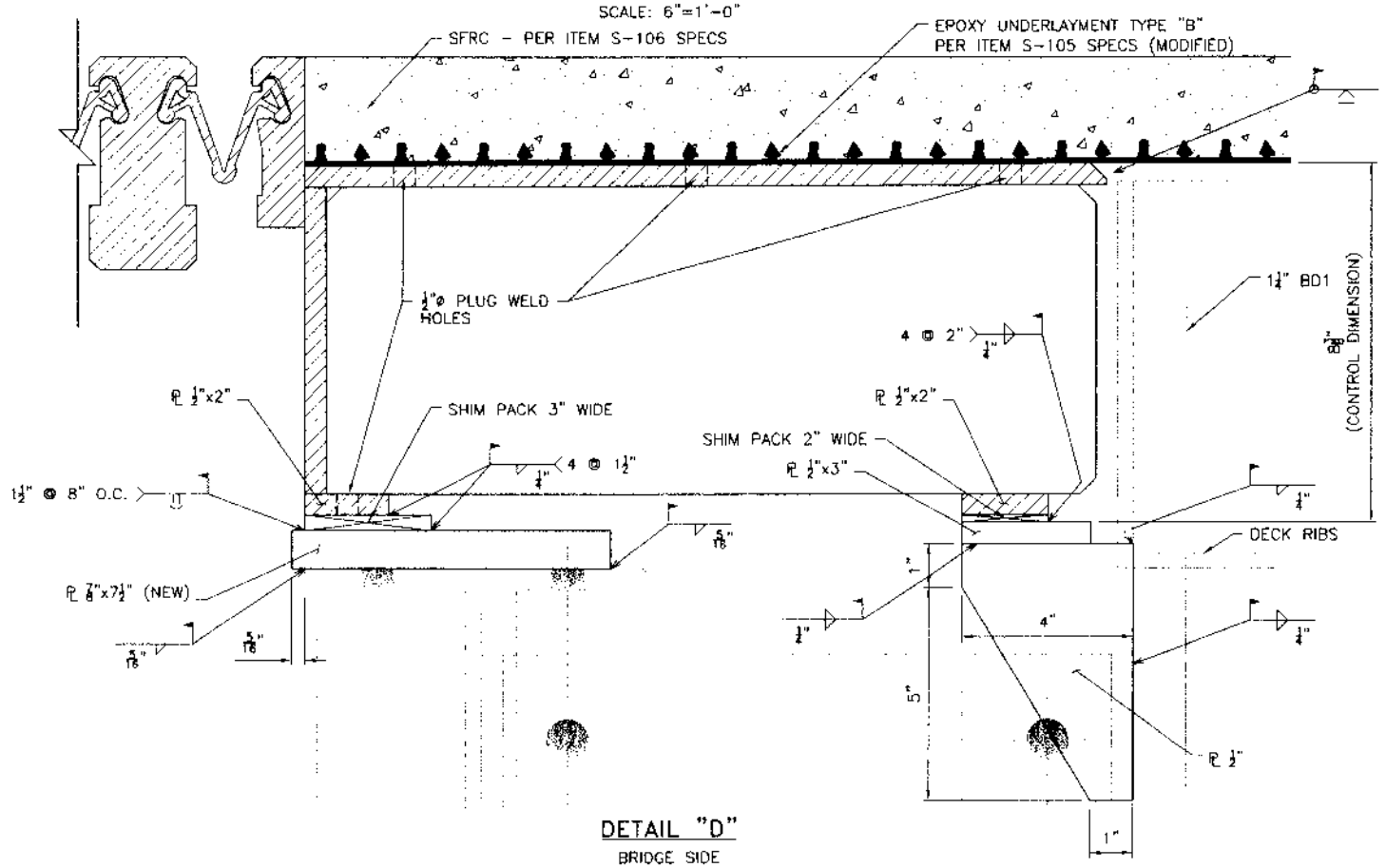

DETAIL "D"
BRIDGE SIDE
SCALE: 6"=1'-0"

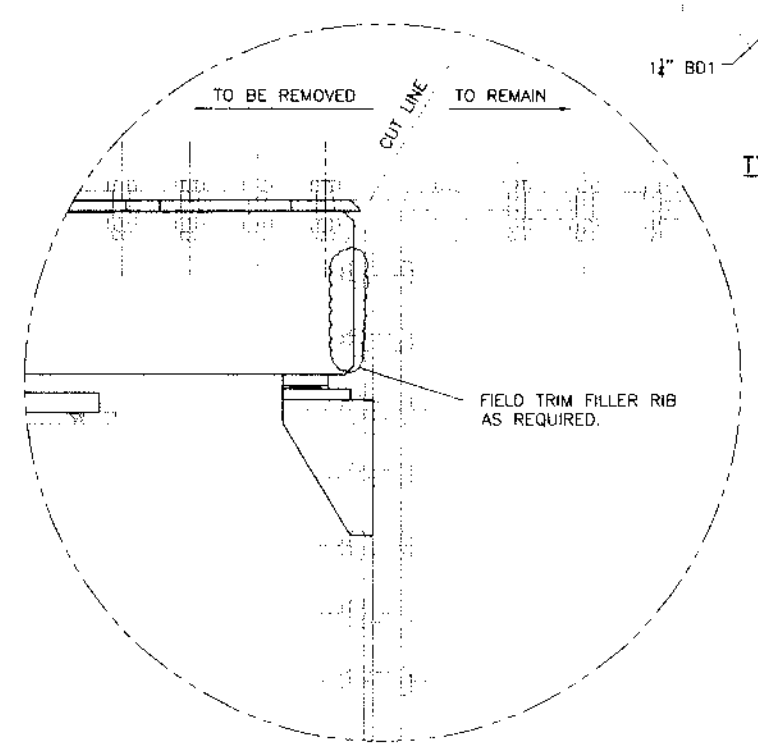

SECTION AT DECK SPLICE
(BETWEEN SUPPORT ASSEMBLIES)
SCALE: 3"=1'-0"

Daniel R. Kunal
2/25/04

~ 5/16" SHIM PACK – 3" WIDE
(BRIDGE AND APPROACH NOSES)
PL ¼"x3"
PL 3/16"x3"
PL ⅛"x3"
PL 1/16"x3"
(LENGTH AS NEEDED)

LEGEND:

WATSON BOWMAN SUPPLIED

SHEET NUMBER 39

ST. CHARLES | PARISH
450.3(509) | FEDERAL PROJECT
450-37-0020 | STATE PROJECT
MH DT | DESIGNED CHECKED
BNH MH | DETAILED CHECKED
01-28-04 NOTED | DATE SCALE

NO.	DATE	REVISION DESCRIPTION	BY

MISSISSIPPI RIVER BRIDGE (LULING)
DECK TEST SECTION
AND JOINT REPAIRS
SUPPORT ASSEMBLY
DETAILS "B" AND "D"

HUVAL & ASSOCIATES, INC.
Consulting Engineers

X:\HUVAL Projects\3-54 (Luling)\CORE DWGS\version sec 1-8-04\035-041\Support Assembly.dwg, Details B and D, 02/27/2004 02:13:49 PM

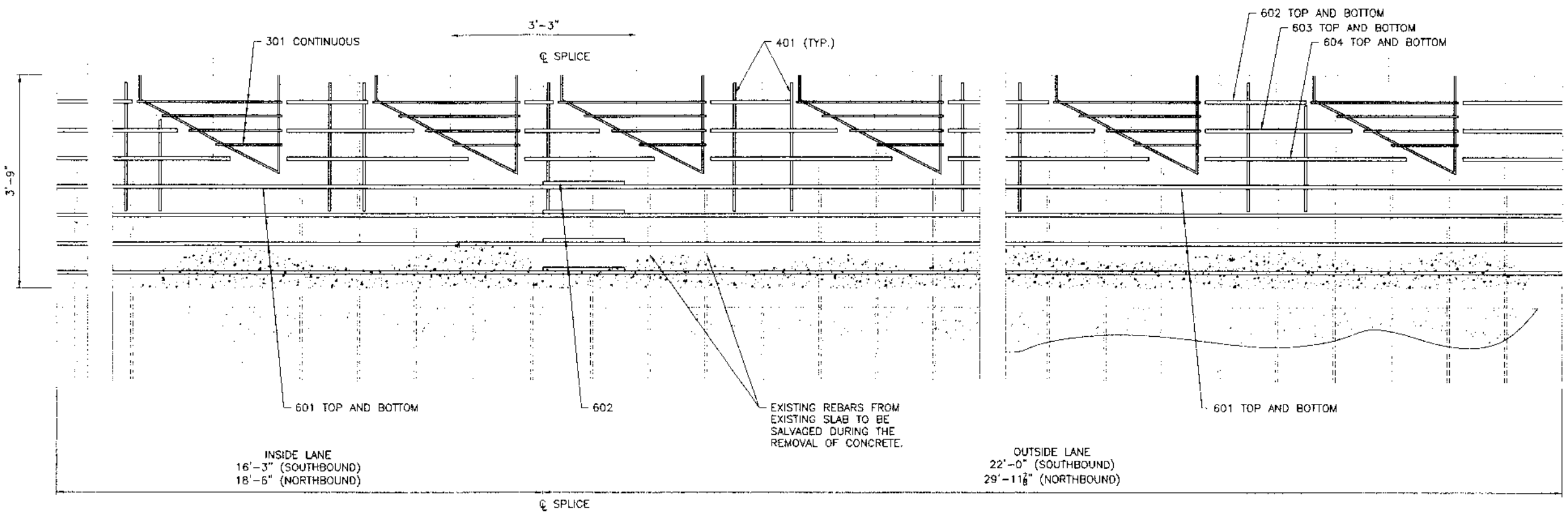

REINFORCING STEEL PLAN

SCALE: 1"=1'-0"

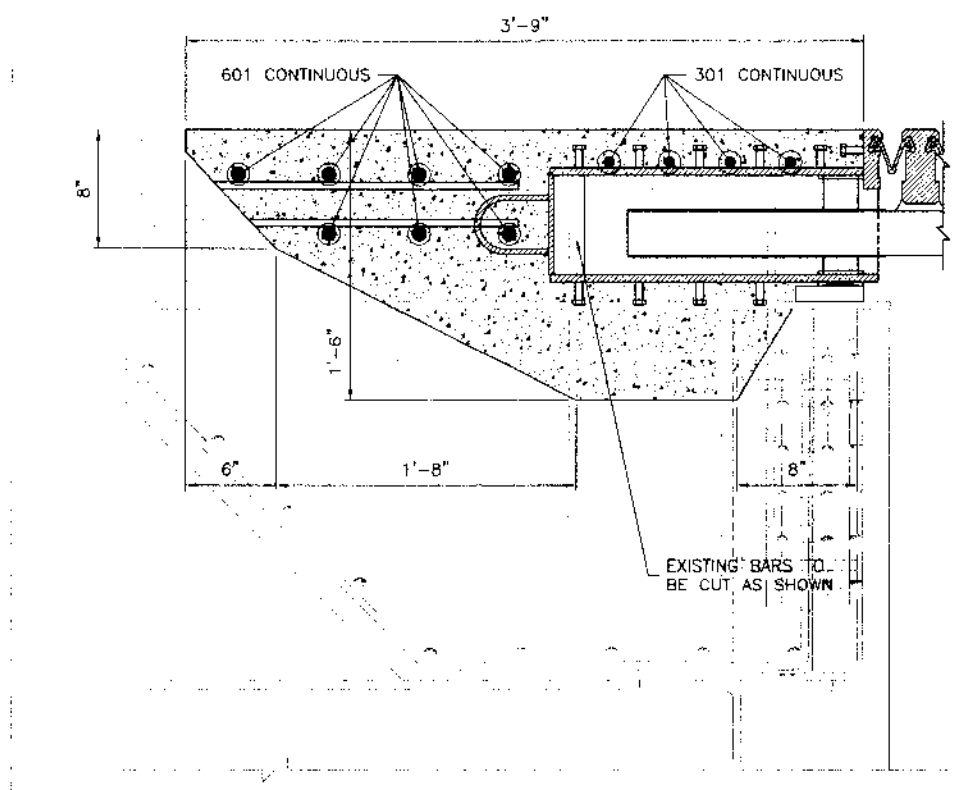

SECTION AT SUPPORT ASSEMBLY

SCALE: 2"=1'-0"

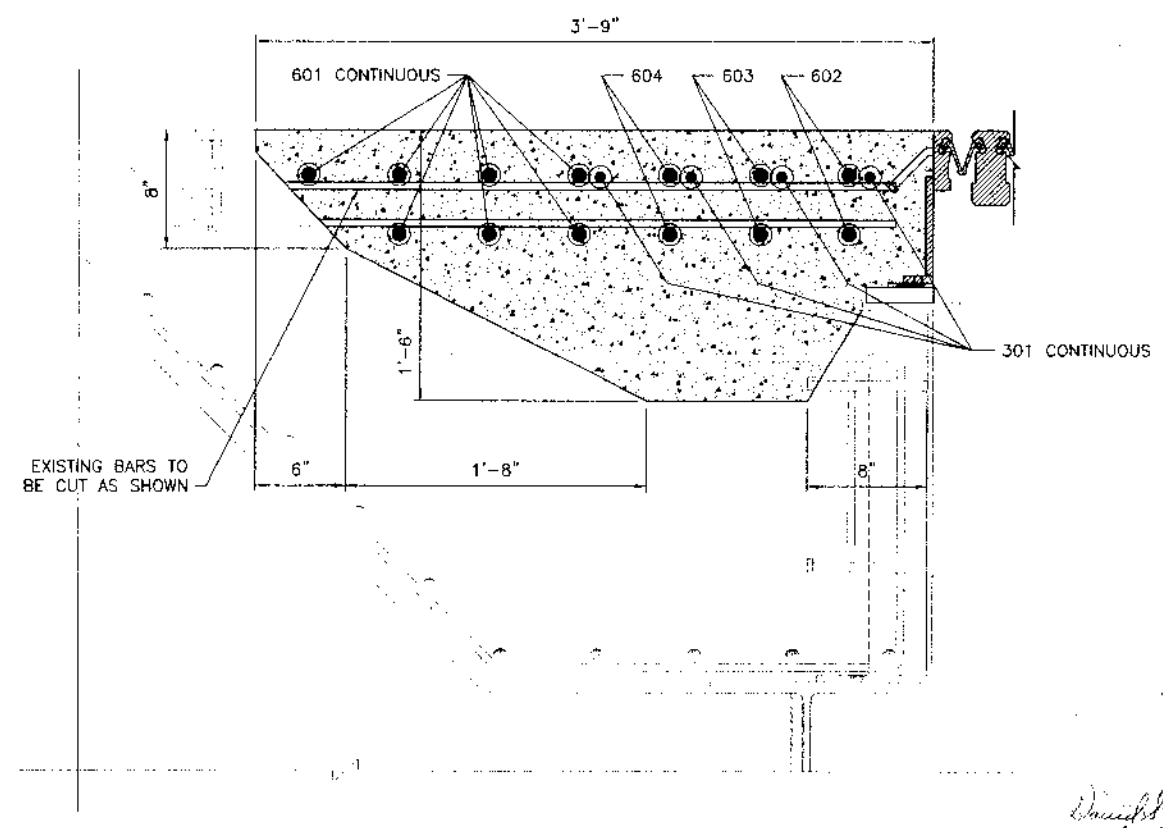

SECTION BETWEEN SUPPORT ASSEMBLY

SCALE: 2"=1'-0"

2/25/04

SHEET NUMBER	40
PARISH	ST. CHARLES
FEDERAL PROJECT	4503(509)
STATE PROJECT	450-37-0020
DESIGNED / CHECKED	MH / DT
DETAILED / CHECKED	BKH / MH
DATE / SCALE	01-28-04 / NOTED

NO.	DATE	REVISION DESCRIPTION	BY

MISSISSIPPI RIVER BRIDGE (LULING)
DECK TEST SECTION
AND JOINT REPAIRS

CONCRETE REINFORCING
STEEL LAYOUT

HUVAL & ASSOCIATES, INC.
Consulting Engineers

X:\HUVAL Projects\3154 (Luling)\CORE DWGS\revised 1-8-04\035-041\Support Assembly.dwg, Reinforcing Steel Layout, 02/25/2004 10:46:58 AM

SOUTHBOUND BRIDGE (INSIDE LANE)*

REINFORCING STEEL SCHEDULE

BAR	NO.	UNIT LENGTH	TOTAL LENGTH	LOCATION
301	4	17'-3" ⊙	69'-0"	SLAB
TOTAL NO. 3 BARS = 26.0 lbs.				
401	20	3'-0"	60'-0"	SLAB
TOTAL NO. 4 BARS = 41.0 lbs.				
601	7	18'-3" ⊗	127'-9"	SLAB
602	10	1'-2"	11'-8"	SLAB
603	10	2'-0"	20'-0"	SLAB
604	10	2'-9"	27'-6"	SLAB
TOTAL NO. 6 BARS = 280.0 lbs.				

* REQUIRED TO BE CONSTRUCTED FIRST

⊙ INCLUDES LAP SPLICE OF 1'-0"

⊗ INCLUDES LAP SPLICE OF 2'-0"

SOUTHBOUND BRIDGE (OUTSIDE LANE)*

REINFORCING STEEL SCHEDULE

BAR	NO.	UNIT LENGTH	TOTAL LENGTH	LOCATION
301	4	21'-8"	86'-8"	SLAB
TOTAL NO. 3 BARS = 33.0 lbs.				
401	20	3'-0"	60'-0"	SLAB
TOTAL NO. 4 BARS = 41.0 lbs.				
601	7	21'-8"	151'-8"	SLAB
602	10	1'-2"	11'-8"	SLAB
603	10	2'-0"	20'-0"	SLAB
604	10	2'-9"	27'-6"	SLAB
TOTAL NO. 6 BARS = 316.0 lbs.				

* REQUIRED TO BE CONSTRUCTED SECOND

NORTHBOUND BRIDGE (INSIDE LANE)*

REINFORCING STEEL SCHEDULE

BAR	NO.	UNIT LENGTH	TOTAL LENGTH	LOCATION
301	4	19'-6" ⊙	77'-8"	SLAB
TOTAL NO. 3 BARS = 30.0 lbs.				
401	24	3'-0"	72'-0"	SLAB
TOTAL NO. 4 BARS = 49.0 lbs.				
601	7	20'-6" ⊗	143'-6"	SLAB
602	12	1'-2"	14'-0"	SLAB
603	12	2'-0"	28'-0"	SLAB
604	12	2'-9"	33'-0"	SLAB
TOTAL NO. 6 BARS = 328.0 lbs.				

* CONTRACTOR PERMITTED TO CONSTRUCT INSIDE OR OUTSIDE FIRST. REINFORCING STEEL SCHEDULE IS BASED ON INSIDE CONSTRUCTION FIRST.

⊙ INCLUDES LAP SPLICE OF 1'-0"

⊗ INCLUDES LAP SPLICE OF 2'-0"

NORTHBOUND BRIDGE (OUTSIDE LANE)*

REINFORCING STEEL SCHEDULE

BAR	NO.	UNIT LENGTH	TOTAL LENGTH	LOCATION
301	4	29'-9"	119'-0"	SLAB
TOTAL NO. 3 BARS = 45.0 lbs.				
401	28	3'-0"	84'-0"	SLAB
TOTAL NO. 4 BARS = 57.0 lbs.				
601	7	29'-9"	208'-3"	SLAB
602	14	1'-2"	16'-4"	SLAB
603	14	2'-0"	28'-0"	SLAB
604	14	2'-9"	38'-6"	SLAB
TOTAL NO. 6 BARS = 437.0 lbs.				

* CONTRACTOR PERMITTED TO CONSTRUCT INSIDE OR OUTSIDE FIRST. REINFORCING STEEL SCHEDULE IS BASED ON INSIDE CONSTRUCTION FIRST.

2/25/04

TOTAL REINFORCING STEEL FOR
NORTHBOUND AND SOUTHBOUND = 1,683.0 lbs.
(NO DIRECT PAYMENT)

TOTAL SFRC SOUTHBOUND = 6.35 CU. YDS.
TOTAL SFRC NORTHBOUND = 8.02 CU. YDS.
TOTAL = 14.37 CU. YDS.
(NO DIRECT PAYMENT)

SHEET NUMBER 41

ST. CHARLES | PARISH
4503(509) | FEDERAL PROJECT
450-37-0020 | STATE PROJECT

DESIGNED MH | CHECKED OT
DETAILED BKH | CHECKED MH
DATE 01-28-04 | SCALE N.T.S.

BY | DATE | NO. | REVISION DESCRIPTION

MISSISSIPPI RIVER BRIDGE (LULING)
DECK TEST SECTION
AND JOINT REPAIRS

CONCRETE REINFORCING
STEEL SCHEDULE

HUVAL & ASSOCIATES, INC. Consulting Engineers

X:\HUVAL Projects\3154 (Luling)\CORE DWGS\Revised 1-8-04\035-041\Support Assembly.dwg, Reinforcing Steel Schedule 02/25/2004 10:48:44 AM

GENERAL PROVISIONS

All Temporary Traffic Control Devices used shall be in accordance with the LaDOTD Standard Specifications for Roads and Bridges, the Manual on Uniform Traffic Control Devices (MUTCD), and shall meet the National Cooperative Highway Research Program (NCHRP) 350 for Test Level 3 requirements.
Materials used for Temporary Traffic Controls shall be in accordance with the LaDOTD Standard Specifications for Roads and Bridges and when applicable the LaDOTD Qualified Products List (QPL).
No temporary traffic controls shall be erected without the approval of the Project Engineer and until work is about to begin.
No lane closures, lane shifts, or detours shall occur without the authorization and presence of the Project Engineer
Responsibility is hereby placed upon the contractor for the installation, maintenance, and operation of all temporary traffic control devices called for in these plans or required by the Project Engineer for the protection of the traveling public as well as all Department and construction personnel.
The contractor shall also be responsible for the maintenance of all permanent signs and pavement markings left in place as essential to the safe movement and guidance of traffic within the project limits.
The District Traffic Operations Engineer (DTOE) shall serve as a technical advisor to the Project Engineer for all Traffic Control matters.

SPEED LIMITS

Speed limits shall be lowered by 10 mph for any construction, maintenance, or utility operation that requires one or more of the following:
(A) the condition of the original highway is degraded due to milled surfaces or uneven pavements;
(B) work is in progress in the immediate vicinity of the travel way requiring lane closures, lane width reductions, or low speed detours; (C) workers present on the shoulder within 2' of the edge of traveled way without barrier protection.
The reduced speed zone shall only apply to those portions of the project limits affected.
At the end of the reduced speed zone, a speed limit sign displaying the original speed limit before construction shall be installed.
If conditions warrant, the District Traffic Operations Engineer may authorize the reduction of the speed limit by more than 10 mph.

TYPE III BARRICADES

All barricades shall use Class 3 High Intensity Sheeting on both sides of the barricade.
All Type III Barricades shall be a minimum of 8 feet in length and must meet NCHRP 350 requirements.
When signs and lights are to be mounted to a barricade, they must meet NCHRP 350 requirements.

LIGHTING (see QPL)

Lighting shall supplement all barricades that are placed in a closed lane or that extend across a highway. Two Type B High Intensity lights shall be used per lane closed in rural areas. In urban areas two Type A Low Intensity Lights may be used where adequate ambient lighting is available.
One Type B High Intensity light shall be used to supplement the first sign (or pair of signs) that gives warning about a lane closure during night time operations.
Type C steady burn lights shall be used on all channelizing devices in the taper as well as the first two devices in the transition.

SIGNS

All signs used for temporary traffic controls shall follow the Department's Traffic Control (TC) details and the MUTCD. Signs shown in the TC illustrations are typical and may vary with each specific condition.
More appropriate signing for a specific condition may be required or substituted with the approval of the Project Engineer and reviewed by the District Traffic Operations Engineer.
When projects are separated by less than one mile, they shall be signed as one project or as directed by the Project Engineer.
At no time shall signs warning against a particular operation be left in place once the operation has been completed or where the obstacle has been removed.
Signs over 10 sq ft shall be mounted on two post and signs over 20 sq ft shall be mounted on at least three post.
Signs shall have a minimum of two bolts per post.
Permanent signs no longer applicable or in conflict shall be removed or covered with a strong, lightweight, opaque material.
Warning signs used for temporary traffic control, shall meet the following guidelines unless otherwise noted in the plans:
(A) size shall be 48" x 48", (B) see the Departments Standard Specifications and the QPL for sheeting information, (C) a minimum of a 2 lb U-Channel post may be used driven to a maximum depth of 3', (D) sign height above roadway surface shall be 7' urban and 5' rural, (E) lateral distance of signs shall be a minimum of 6' from the edge of shoulder or edge of pavement if no shoulder exist and 2' from the back of curb in urban areas.
Vinyl Roll Up signs will be allowed for short term (less than 12 hours) daytime work provided that they meet all size, color, retroreflectivity requirements, and NCHRP 350.
Rollup signs shall not be used when workers are not present.
Mesh rollup signs shall not be allowed.
All signs shall be removed or covered in a manner approved by the Project Engineer when no longer applicable.
Contractor shall use caution not to damage existing signs which remain in place. Any DOTD signs damaged by work operations shall be replaced at the contractor's expense.

CHANNELLIZING DEVICES

The following devices may be used:
Tubular Markers, Vertical Panels, Cones, Drums, and Super Cones.
Drums (at standard spacing) and Super Cones (at 1/2 standard spacing) are the only devices allowed to be used in taper areas on the interstate system.
The spacing of channelizing devices in a taper should not exceed a distance in feet equal to 1.0 times the speed limit in mph (with a maximum of 50 feet).
The spacing of channelizing devices in a tangent should not exceed a distance in feet equal to 2.0 times the speed limit in mph (with a maximum of 100 feet).
Retroreflective material pattern used on super cones shall match that used on drums.

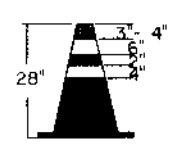

Traffic Cone

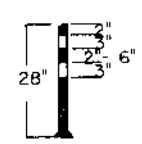

Tubular Marker

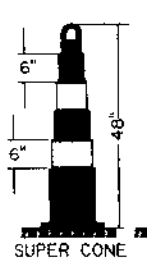

SUPER CONE

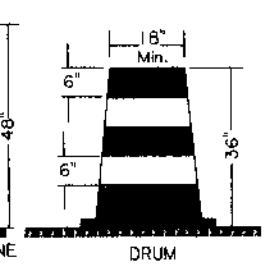

DRUM

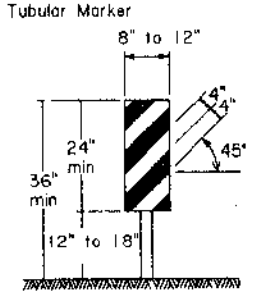

VERTICAL PANEL

DYNAMIC MESSAGE SIGNS

Dynamic Message Signs (DMS) shall be used on all Interstate Highways and on all other roadways with an ADT greater than 20,000.
When used in advance of a lane closure or a lane shift, the DMS should be placed on the right hand side of the road a minimum distance of 2 miles in advance of the taper.
If vehicles are queing beyond the 2 mile DMS, an additional DMS should be placed on the right hand side of the road a minimum distance of 5 miles in advance of the taper.
Standard Dynamic Message Sign messages shall be approved by the Project Engineer.

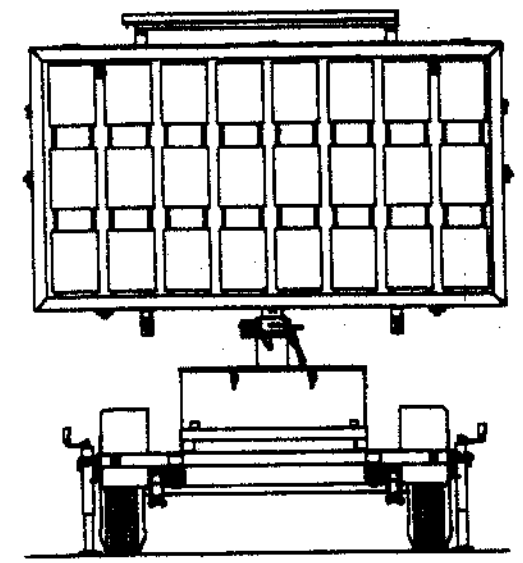

FLASHING ARROW PANELS

Flashing Arrow Panels shall be used for lane closures on all facilities with 2 or more lanes in a single direction and a speed limit greater than 35 mph.
When used, flashing arrow panels should be located on the shoulder at the beginning of the taper.
Where the shoulder width is limited, the flashing arrow panel should be placed within the closed lane as close to the beginning of the taper as practical.
All Flashing Arrow Panels used on high speed roadways (45 mph and greater) shall be 4' x 8' Type C.

When no longer needed, the arrow panel shall be removed from the right-of-way or adequately protected by a NCHRP 350 approved method.

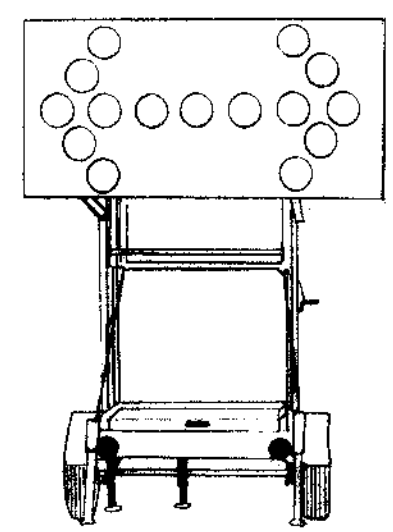

PAVEMENT MARKINGS (see QPL)

All pavement markings within the limits of the project that are in conflict with the project signing or the required traffic movements shall be removed from the pavement by blast cleaning or grinding (Existing striping shall not be painted over with black paint or covered with tape).
If, in the opinion of the Project Engineer, special pavement markings are needed, they shall be reflectorized, removable, and accompanied by the proper signage.
Temporary Raised Pavement Markers (RPMs) may be added to supplement temporary striping in areas of transition, in tapers, in detours, and in other areas of need as directed by the Project Engineer.
Materials and placement of temporary pavement markings shall conform to section 713 of the Standard Specifications. If no pay item exists, temporary markings will be concidered incidental to traffic control.

FLAGGERS

When utilized, a flagger shall use a minimum 18 inch sign on a minimum 6' stop/slow paddle and wear ANSI Class 3 Lime Green colored vest. In all flagging operations, the flagger must be visible from flagger advance warning sign. Flaggers shall be properly trained.

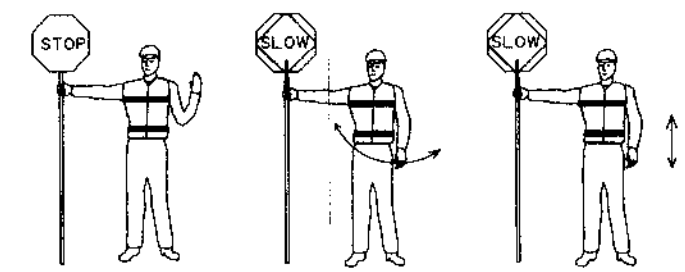

To STOP Traffic — Traffic Proceed — To Alert & SLOW Traffic

Use of Hand Sign

STATE OF LOUISIANA
CHARLES W. ADAMS, III
REG. No. 27440
REGISTERED PROFESSIONAL ENGINEER IN CIVIL ENGINEERING

Charles W. Adams III
6/7/03

SHEET NUMBER	42
PARISH	ST. CHARLES
FEDERAL PROJECT	4503(504)
STATE PROJECT	450-37-0020
DESIGNED C. ADAMS	
CHECKED P. ALLAIN	
DETAILED D. SEWARD'S	
CHECKED C. ADAMS	
DATE 06/02/03	
SHEET 1 OF 1	

NO. | DATE | REVISION DESCRIPTION | BY

TEMPORARY TRAFFIC CONTROL GENERAL NOTES SHEET

TC-00

SPECIAL

TRAFFIC ENGINEERING

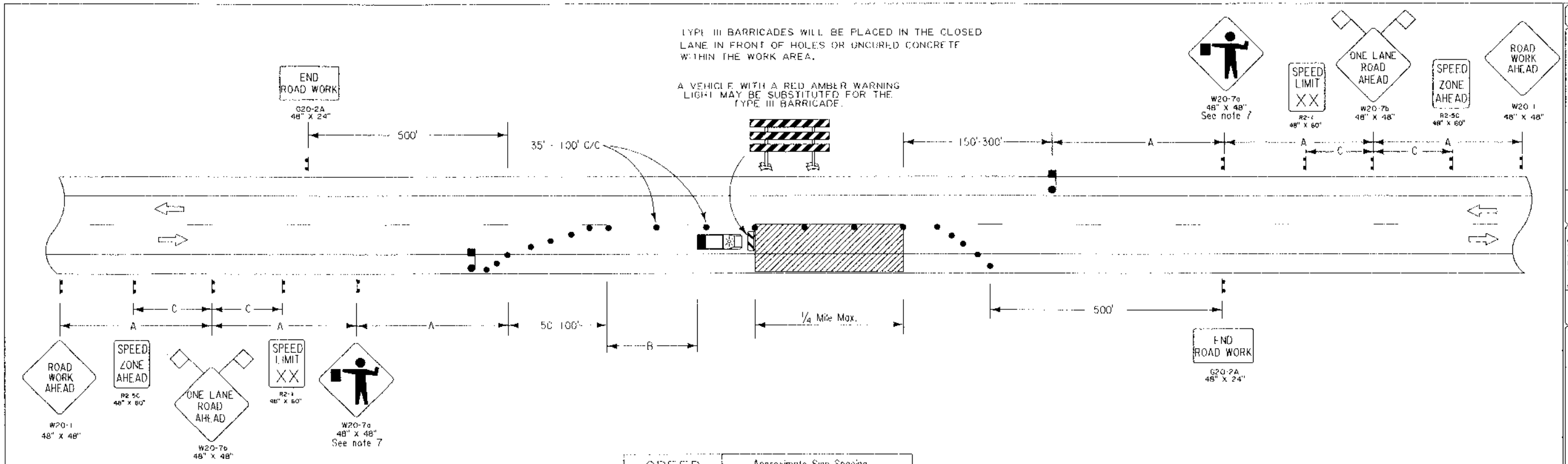

SPEED LIMIT (See note 5)	Approximate Sign Spacing		
	"A"	"B"	"C"
35 mph	500'	100'-200'	N/A
45 mph	1000'	100'-200'	500'
55 mph	1500'	200'-300'	800'

SIGN SPACING TO BE ADJUSTED FOR HORIZONTAL & VERTICAL CURVES.

FLAGGERS

WHEN UTILIZED, A FLAGGER SHALL USE A MINIMUM 6' STOP/SLOW PADDLE AND WEAR ANSI CLASS 3 LIME GREEN COLORED VEST. IN ALL FLAGGING OPERATIONS, THE FLAGGER MUST BE VISIBLE FROM FLAGGER SIGN. FLAGGERS SHALL BE PROPERLY TRAINED.

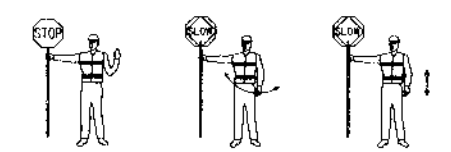

To STOP Traffic — Traffic Proceed — To Alert & SLOW Traffic

Use of Hand Sign

NOTES

THIS SHEET SHALL BE USED WITH THE "TEMPORARY TRAFFIC CONTROL GENERAL NOTES SHEET (TC-00)".

1. CONDITIONS REPRESENTED ARE FOR WORK WHICH REQUIRES CLOSING TRAFFIC LANES DURING DAYLIGHT HOURS ONLY. PORTABLE SIGNS MAY BE USED FOR WORK LASTING LESS THAN 3 DAYS.
2. WHEN A WORK AREA HAS BEEN ESTABLISHED ON ONE SIDE OF THE ROADWAY ONLY, THERE SHALL BE NO CONTRACTOR PARKING ON THE OPPOSITE SHOULDER WITHIN 500 FEET OF THE WORK AREA.
3. CHANNELIZING DEVICES MAY BE PLACED UP TO 2' BEYOND CENTERLINE ONLY AT SPECIFIC LOCATIONS WHERE ACTUAL WORK ACTIVITY IS TAKING PLACE. TRAVELED LANE IS NEVER TO BE REDUCED BELOW A 10' WIDTH. CHANNELIZING DEVICES SHALL BE RETURNED TO THE CENTERLINE WHEN THE WORK ACTIVITY HAS PASSED.
4. SPACING OF CHANNELIZING DEVICES IN THE TAPER SHOULD BE NO MORE THAN 20'. A MINIMUM OF 5 CHANNELIZING DEVICES ARE TO BE USED IN THE TAPER.
5. SPEED LIMIT REFERS TO THE LEGALLY ESTABLISHED SPEED LIMIT BEFORE CONSTRUCTION.
6. TO PREVENT VEHICLES FROM ENTERING THE WORK AREA AGAINST THE FLOW OF TRAFFIC, AN ADDITIONAL FLAGGER SHALL BE STATIONED AT EACH INTERSECTION, MAJOR DRIVEWAY, RAILROAD CROSSING OR CROSSING WITHIN THE WORK AREA.
7. VISUAL OR RADIO CONTACT SHALL BE REQUIRED BETWEEN THE FLAGGERS AT ALL TIMES.
8. ANY SIGNS IN CONFLICT WITH CONSTRUCTION SIGNING SHALL BE REMOVED OR COVERED.
9. MINIMUM CONSTRUCTION SIGNING: ANY ADDITIONAL SIGNS SHOWN IN THE "MANUAL ON UNIFORM TRAFFIC CONTROL DEVICES" AND REQUIRED BY THE PROJECT ENGINEER SHALL BE INSTALLED AT NO ADDITIONAL COST TO THE DEPARTMENT.

LEGEND

- Traffic Sign
- Flagger
- Channelizing Devices
- Type III Barricades
- Work Area

STATE OF LOUISIANA
CHARLES W. ADAMS, III
REG. No. 27440
REGISTERED PROFESSIONAL ENGINEER IN CIVIL ENGINEERING

Charles W. Adams III
6/17/03

SHEET NUMBER 43

DESIGNED C. ADAMS
CHECKED P. ALLAIN
DETAILED D. SOWARDS
CHECKED C. ADAMS
DATE 06/02/03
SHEET

FEDERAL PROJECT 4503(609)
STATE PROJECT 450-37-0020

REVISION DESCRIPTION | NO. | DATE

TRAFFIC CONTROL LAYOUT FOR LANE CLOSURE LESS THAN 1/4 MILE IN LENGTH

TC-02

TRAFFIC ENGINEERING

* REMOVE OR COVER WHEN NO LONGER APPLICABLE.
** REPLACE WITH "ROAD WORK ½ MILE" WHEN NO LONGER APPLICABLE.

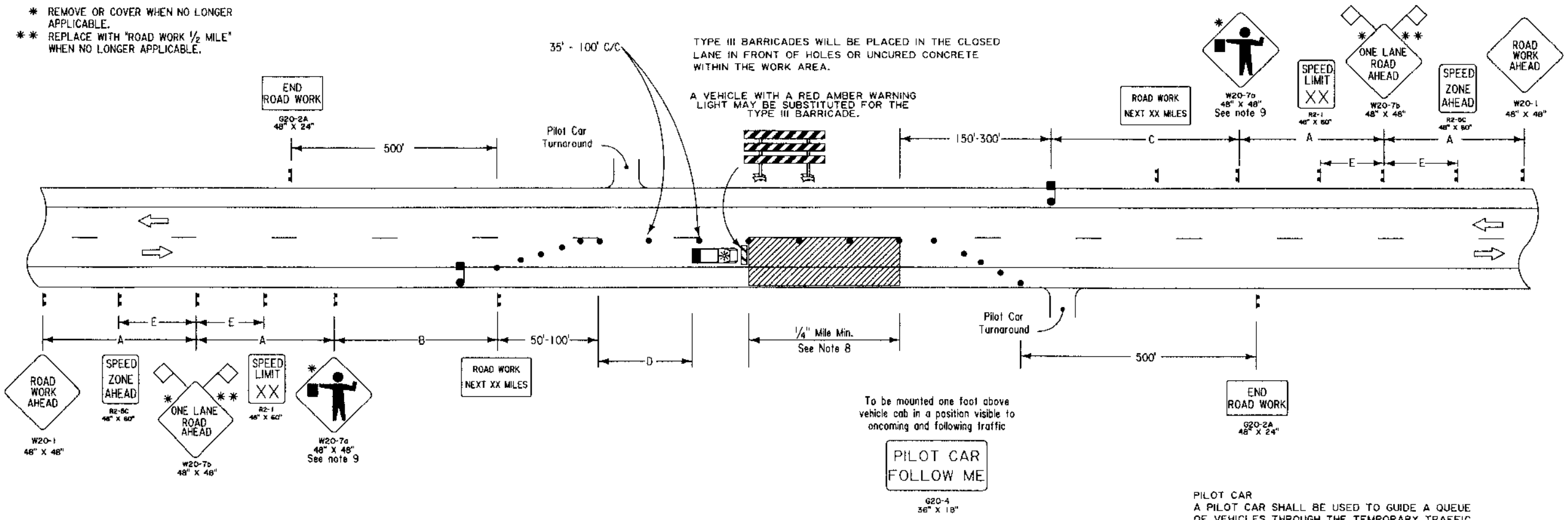

NOTES

THIS SHEET SHALL BE USED WITH THE "TEMPORARY TRAFFIC CONTROL GENERAL NOTES SHEET (TC-00)".

1. WHEN A WORK AREA HAS BEEN ESTABLISHED ON ONE SIDE OF THE ROADWAY ONLY, THERE SHALL BE NO CONTRACTOR PARKING ON THE OPPOSITE SHOULDER WITHIN 500 FEET OF THE WORK AREA.

2. CHANNELIZING DEVICES MAY BE PLACED UP TO 2' BEYOND CENTER-LINE ONLY AT SPECIFIC LOCATIONS WHERE ACTUAL WORK ACTIVITY IS TAKING PLACE. TRAVELED LANE IS NEVER TO BE REDUCED BELOW 10'. CHANNELIZING DEVICES SHALL BE RETURNED TO THE CENTERLINE WHEN THE WORK ACTIVITY HAS PASSED.

3. SPACING OF CHANNELIZING DEVICES IN THE TAPER SHOULD BE NO MORE THAN 20'. A MINIMUM OF 5 CHANNELIZING DEVICES ARE TO BE USED IN THE TAPER.

4. SPEED LIMIT REFERS TO THE LEGALLY ESTABLISHED SPEED LIMIT BEFORE CONSTRUCTION.

5. TO PREVENT VEHICLES FROM ENTERING THE WORK AREA AGAINST THE FLOW OF TRAFFIC, AN ADDITIONAL FLAGGER SHALL BE STATIONED AT EACH INTERSECTION, MAJOR DRIVEWAY, RAILROAD CROSSING OR CROSSING WITHIN THE WORK AREA.

6. "B" AND "C" DISTANCES ARE TO REMAIN AS NEAR MINIMUM VALUES AS WORK PERMITS. HOWEVER, TO BE ABLE TO MOVE THE WORK AREA WITHOUT MOVING THE ADVANCE SIGNING. "B" AND "C" DISTANCES MAY BE VARIED WITHIN THE LIMITS OF THE TABLE. MAXIMUM MOVEMENT CAN BE ACHIEVED BY SETTING ONE "B" OR "C" VALUE AT THE MINIMUM AND THE OTHER VALUE AT ITS MAXIMUM.

7. WITH THE APPROVAL OF THE ENGINEER, THE LENGTH OF THE WORK AREA MAY, FOR A SHORT DURATION, BE CHANGED TO AS MUCH AS ONE-HALF MILE MAXIMUM TO IMPROVE THE SIGHT DISTANCE TO THE FLAGGER. VISUAL OR RADIO CONTACT SHALL BE REQUIRED BETWEEN THE FLAGGERS AT ALL TIMES.

8. FOR PROJECTS IN RURAL AREAS THE DISTANCE BETWEEN FLAGGERS SHALL NOT EXCEED 2.5 MILES FOR A.D.T. (AVERAGE DAILY TRAFFIC) OF LESS THAN 2,500 AND 2.0 MILES FOR A.D.T. FROM 2,500 TO 5,000. DISTANCE BETWEEN FLAGGERS SHALL NOT EXCEED 1.5 MILES FOR A.D.T. GREATER THAN 5,000 VEHICLES.

9. THE CONTRACTOR MAY EXTEND THE LANE CLOSURE UP TO 1.0 MILE WITH THE FOLLOWING PROVISIONS:

   (A) THE LANE CLOSURE EXTENSION IS PERMITTED ONLY DURING NON-PEAK HOURS.

   (B) ONCE THE TRAFFIC CONTROL DEVICES HAVE BEEN PLACED TO EXTEND THE LANE CLOSURE, THE TRAFFIC CONTROL DEVICES AT THE BEGINNING OF THE TRAFFIC CONTROL SHALL BE MOVED DOWNSTREAM TO LIMIT THE WORK AREA TO THE DISTANCE DEFINED IN NOTE 9.

10. ANY SIGNS IN CONFLICT WITH CONSTRUCTION SIGNING SHALL BE REMOVED OR COVERED.

11. MINIMUM CONSTRUCTION SIGNING: ANY ADDITIONAL SIGNS SHOWN IN THE "MANUAL ON UNIFORM TRAFFIC CONTROL DEVICES" AND REQUIRED BY THE PROJECT ENGINEER SHALL BE INSTALLED AT NO ADDITIONAL COST TO THE DEPARTMENT.

SPEED LIMIT (See note 5)	Approximate Sign Spacing			
	"A"	"B" or "C" Range (See Note 7)	"D"	"E"
35 mph	500'	500'-3000'	100'-200'	N/A
45 mph	1000'	1000'-3000'	100'-200'	500'
55 mph	1500'	1000'-3000'	200'-300'	800'

PILOT CAR

A PILOT CAR SHALL BE USED TO GUIDE A QUEUE OF VEHICLES THROUGH THE TEMPORARY TRAFFIC CONTROL ZONE OR DETOUR. IT SHALL BE USED IN, BUT NOT LIMITED TO, RESTRICTED VISIBILITY OPERATIONS SUCH AS LIME OR CEMENT STABILIZATION, CHIP SEALS, OR OPERATIONS IN HILLY TERRAINS. THE OPERATION OF THE PILOT VEHICLE MAY BE COORDINATED WITH FLAGGING OPERATIONS OR OTHER CONTROLS AT EACH END OF THE ONE-LANE SECTION.

FLAGGERS

WHEN UTILIZED, A FLAGGER SHALL USE A MINIMUM 6' STOP/SLOW PADDLE AND WEAR ANSI CLASS 3 LIME GREEN COLORED VEST. IN ALL FLAGGING OPERATIONS, THE FLAGGER MUST BE VISIBLE FROM FLAGGER SIGN. FLAGGERS SHALL BE PROPERLY TRAINED.

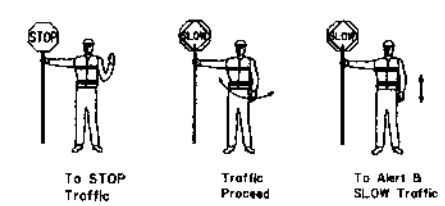

Use of Hand Sign

LEGEND

- Traffic Sign
- Flagger
- Channelizing Devices
- Type III Barricades
- Work Area

STATE OF LOUISIANA
CHARLES W. ADAMS, III
REG. No. 27440
REGISTERED PROFESSIONAL ENGINEER IN CIVIL ENGINEERING

Charles W. Adams III
6/7/03

SHEET NUMBER 44

PARISH: ST. CHARLES
FEDERAL PROJECT: 4503(509)
STATE PROJECT: 45D-37-002.0

DESIGNED: C. ADAMS
CHECKED: P. ALLAIN
DETAILED: D. SOWARD'S
CHECKED: C. ADAMS
DATE: 06/02/03
SHEET: 87

REVISION DESCRIPTION
NO. DATE

TRAFFIC CONTROL FOR LANE CLOSURE GREATER THAN ¼ MILE IN LENGTH (SUITABLE FOR MOVING OPERATIONS)

TC-03

SPECIAL DETAIL

TRAFFIC ENGINEERING

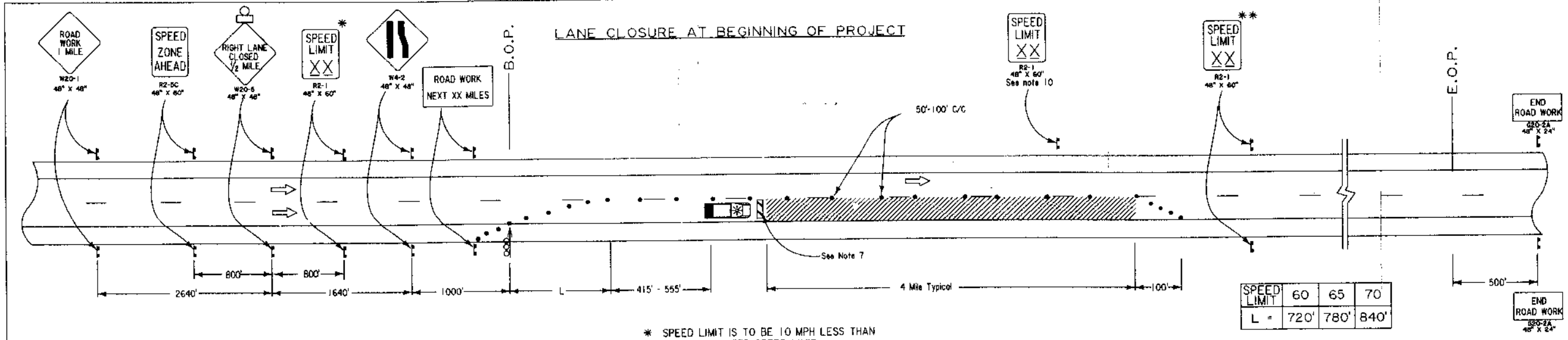

SPEED LIMIT	60	65	70
L =	720'	780'	840'

* SPEED LIMIT IS TO BE 10 MPH LESS THAN LEGALLY POSTED SPEED LIMIT.
** SPEED LIMIT IS TO BE RETURNED TO LEGALLY POSTED SPEED LIMIT.

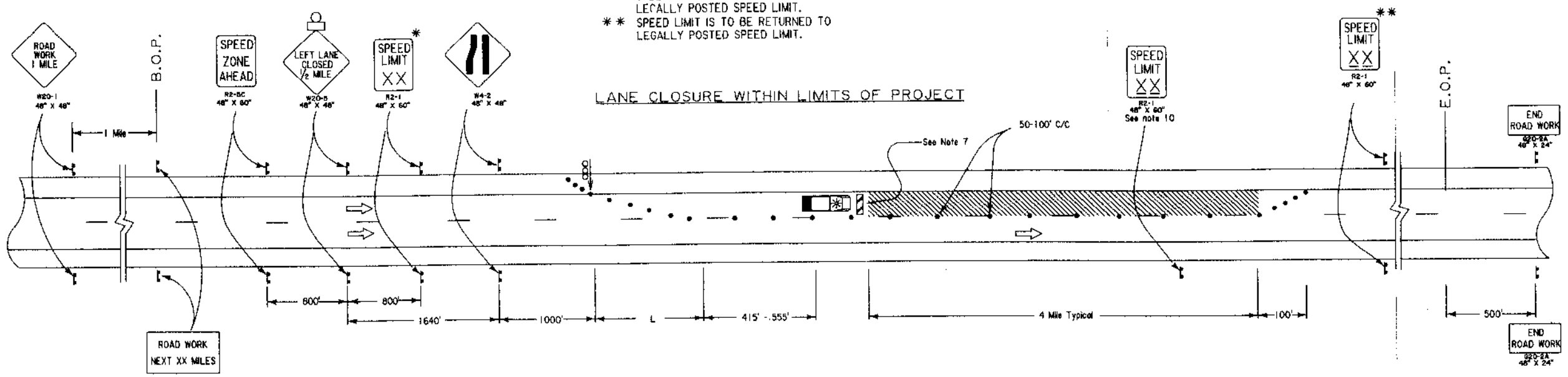

NOTES

THIS SHEET SHALL BE USED WITH THE "TEMPORARY TRAFFIC CONTROL GENERAL NOTES SHEET (TC-00)".

1. SPEED LIMIT REFERS TO THE LEGALLY ESTABLISHED SPEED LIMIT BEFORE CONSTRUCTION.
2. WHEN THE AVERAGE DAILY TRAFFIC (ADT) EXCEEDS 20,000 VEHICLES PER DAY OR WHEN THE TRAFFIC QUEUES BEYOND THE ADVANCED SIGNING, A MINIMUM OF TWO DYNAMIC MESSAGE SIGNS SHALL BE PLACED A MINIMUM OF 2 MILES IN ADVANCE OF THE LANE CLOSURE. SPECIFIC DISTANCES TO BE SET BY THE PROJECT ENGINEER.
3. DOWNSTREAM TAPERS SHALL BE 100' PER LANE WITH CHANNELIZING DEVICES SPACED AT A SPACING OF 20'.
4. THE MAXIMUM SPACING BETWEEN DRUMS IN A MERGING TAPER SHALL BE APPROXIMATELY EQUAL IN FEET TO THE SPEED LIMIT BEFORE ROAD WORK.
5. TYPE III BARRICADES WILL BE PLACED IN THE CLOSED LANE AT A 1000' INTERVAL. WHERE HOLES OR UNCURED CONCRETE EXIST WITHIN THE WORK AREA, AN ADDITIONAL TYPE III BARRICADE SHALL BE PLACED JUST AHEAD OF EACH.
6. IF A RAMP ENTRANCE OR EXIT TAPER FALLS WITHIN THE WORK AREA, REFER TO STANDARD ROAD PLANS TC-08 AND TC-09 FOR TRAFFIC CONTROL DETAILS.
7. A VEHICLE WITH A FLASHING AMBER LIGHT WITH A TRUCK MOUNTED ATTENUATOR MAY BE SUBSTITUTED FOR THE TYPE III BARRICADE.
8. UNDER NORMAL CLOSURE CONDITIONS, DEVICES SHOULD BE PLACED 2' FROM CENTERLINE INTO THE CLOSED LANE. CHANNELIZING DEVICES MAY ENCROACH UP TO 2 FEET FROM CENTERLINE INTO THE OPEN LANE ONLY AT SPECIFIC LOCATIONS WHERE ACTUAL WORK ACTIVITY IS TAKING PLACE. CHANNELIZING DEVICES SHALL BE RETURNED TO THE CLOSED LANE WHEN THE WORK ACTIVITY HAS PASSED. IN NO CASE SHALL THE MAINLINE WIDTH OF THE TRAVEL LANE BE LESS THAN 10'.
9. A FLAGGER SHALL BE USED TO ALERT MOTORISTS WHEN EQUIPMENT OR WORKERS ENCROACH WITHIN 2 FEET OF AN OPEN LANE. THE FLAGGER SHALL BE POSTED ADJACENT TO THE OPEN TRAVEL LANE AND IMMEDIATELY UPSTREAM OF EACH OPERATION. ENCROACHMENT SHALL BE HELD TO A MINIMUM.
10. WHEN THE LENGTH OF CLOSURE IS GREATER THAN 1 MILE, INSTALL SPEED LIMIT SIGNS AT 1 MILE INTERVALS.
11. IF CONDITIONS RESULT IN A DROPOFF OR RISE, BETWEEN LANE CLOSURE AND TRAVEL LANE, WHICH EXCEEDS 2 INCHES OVERNIGHT, THE CONTRACTOR SHALL PLACE A TEMPORARY EDGE LINE IN THE OPEN LANE, A MINIMUM OF 1 FOOT FROM THE DROPOFF OR RISE. IF THE CONTRACTOR CHOOSES TO USE DRUMS FOR THE CHANNELIZING DEVICES, THE TEMPORARY EDGE LINE MAY BE OMITTED AS LONG AS THE DRUM SPACING IS 50' OR LESS. IN EITHER CASE, THE CHANNELIZING DEVICES SHALL BE PLACED IN THE CLOSED LANE DURING NONWORKING HOURS.
12. HIGH INTENSITY FLASHING LIGHTS SHALL BE USED TO MARK THE SECOND ADVANCE WARNING SIGN (_____LANE CLOSED 1/2 MILE). LOW INTENSITY FLASHING LIGHTS SHALL BE USED TO MARK ALL OTHER HAZARDS OFF THE TRAVEL WAY. STEADY BURNING LIGHTS SHALL BE USED ON ALL TRAFFIC CONTROL DEVICES USED FOR MERGING TAPER, INCLUDING THE FIRST TWO DEVICES AFTER THE TAPER ENDS.
13. THE MAXIMUM SPACING BETWEEN CHANNELIZING DEVICES IN A MERGING TAPER AND SHIFTING TAPER SHALL NOT BE GREATER THAN 50'.
14. ANY SIGNS IN CONFLICT WITH CONSTRUCTION SIGNING SHALL BE REMOVED OR COVERED.
15. MINIMUM CONSTRUCTION SIGNING: ANY ADDITIONAL SIGNS SHOWN IN THE "MANUAL ON UNIFORM TRAFFIC CONTROL DEVICES" AND REQUIRED BY THE PROJECT ENGINEER SHALL BE INSTALLED AT NO ADDITIONAL COST TO THE DEPARTMENT.

LEGEND

- Traffic Sign
- Channelizing Devices
- Type III Barricades
- Flashing Arrow Panel
- Work Area

STATE OF LOUISIANA
CHARLES W. ADAMS, III
REG. No. 27440
REGISTERED PROFESSIONAL ENGINEER IN CIVIL ENGINEERING
Charles W. Adams III
6/7/03

SHEET NUMBER 45

PARISH: ST. CHARLES
FEDERAL PROJECT: 4503(509)
STATE PROJECT: 450-37-0020

DESIGNED: C. ADAMS
CHECKED: P. ALLAIN
DETAILED: D. SOWARDS
CHECKED: C. ADAMS
DATE: 06/02/03
SHEET

NO. | DATE | REVISION DESCRIPTION | BY

TRAFFIC CONTROL LAYOUT FOR LANE CLOSURES ON DIVIDED HIGHWAY 60 MPH AND GREATER

TC-06

SPECIAL DETAIL

TRAFFIC ENGINEERING

FREEWAY ENTRANCE WITH RIGHT LANE CLOSED

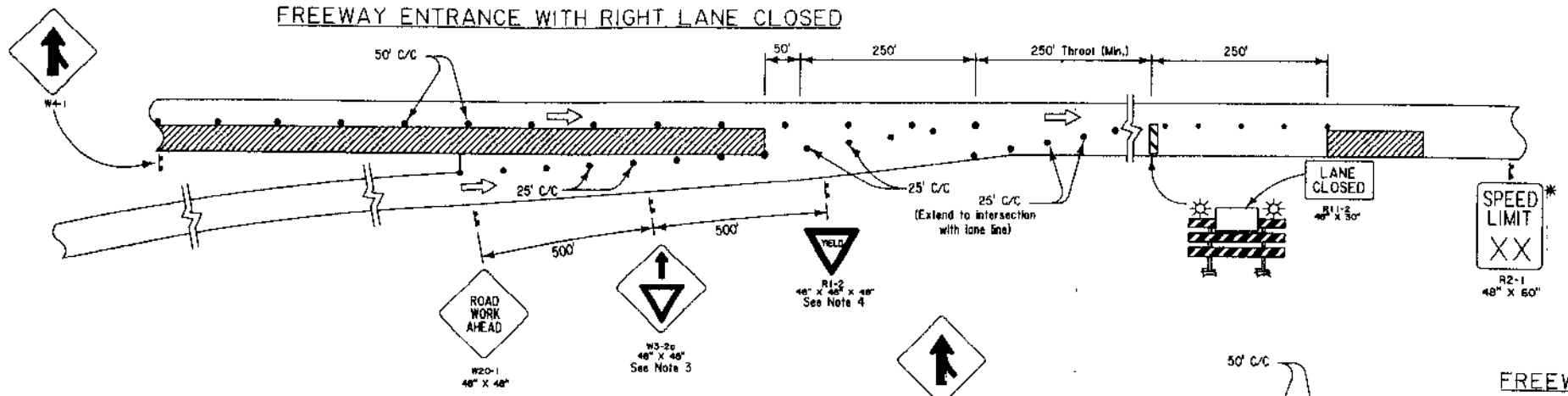

FREEWAY ENTRANCE WITH LEFT LANE CLOSED

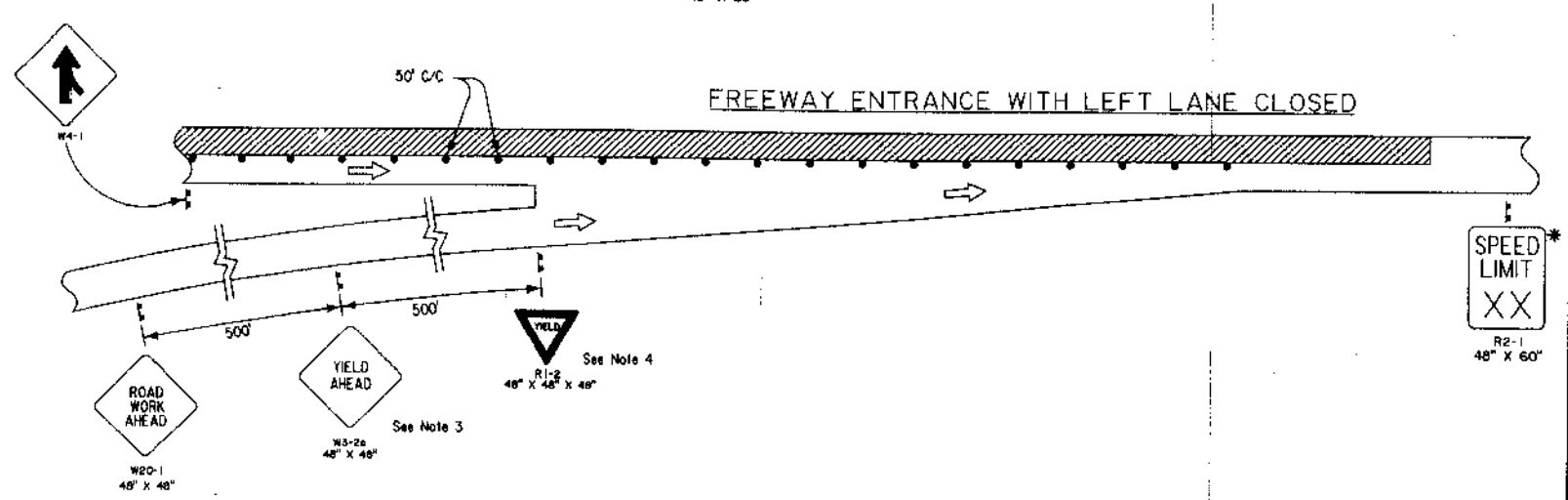

* SPEED LIMIT IS TO BE 10 MPH LESS THAN ORIGINAL SPEED

FREEWAY ENTRANCE VIA MEDIAN CROSSOVER

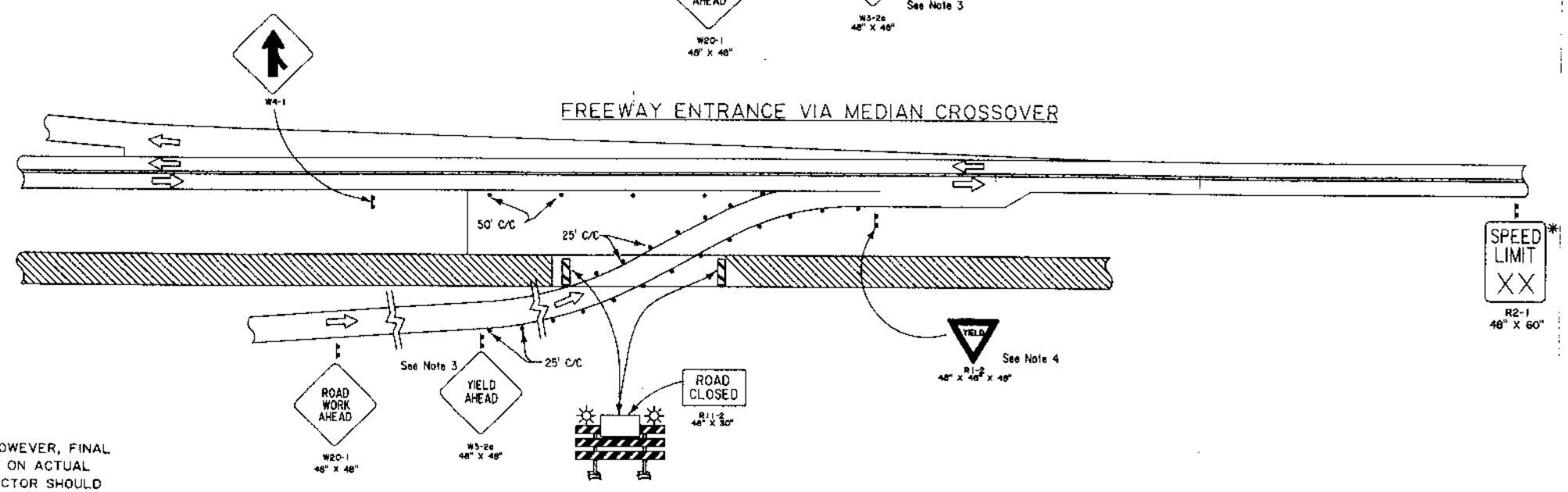

NOTE

TYPICAL APPLICATIONS; HOWEVER, FINAL DESIGN SHOULD BE BASED ON ACTUAL GEOMETRICS. THE CONTRACTOR SHOULD CONSULT WITH THE PROJECT ENGINEER.

LEGEND

- Traffic Sign
- Channelizing Devices
- Type III Barricades
- Work Area

NOTES

THIS SHEET SHALL BE USED WITH THE "TEMPORARY TRAFFIC CONTROL GENERAL NOTES SHEET (TC-00)".

1. FOR MAINLINE LANE CLOSURES SEE OTHER SHEETS.
2. CHANNELIZING DEVICES ON THE LANE LINE SHALL BE OF THE SAME TYPE. CHANNELIZING DEVICES IN EACH TAPER SHALL BE OF THE SAME TYPE.
3. THE "YIELD AHEAD" SIGN IS REQUIRED EXCEPT FOR SHORT TERM MAINTENANCE OPERATIONS WHERE ITS USE MAY BE AN OPTION AS DETERMINED BY THE PROJECT ENGINEER.
4. USE EXISTING "YIELD" SIGN IF PRESENT, OTHERWISE FURNISH "YIELD" SIGN. WHERE INADEQUATE ACCELERATION DISTANCE EXISTS FOR THE TEMPORARY ENTRANCE, THE YIELD SIGN SHALL BE REPLACED WITH STOP SIGNS (ONE ON EACH SIDE OF THE APPROACH), AND STOP AHEAD SIGNS SHALL REPLACE THE YIELD AHEAD SIGNS.
5. LOCATION OF CHANNELIZING DEVICES WITHIN THE GORE AREA TO BE BASED ON DRIVER SIGHT DISTANCE. TO BE DETERMINED BY THE DISTRICT TRAFFIC OPERATIONS ENGINEER.
6. ANY SIGNS IN CONFLICT WITH CONSTRUCTION SIGNING SHALL BE REMOVED OR COVERED.
7. MINIMUM CONSTRUCTION SIGNING; ANY ADDITIONAL SIGNS SHOWN IN THE "MANUAL ON UNIFORM TRAFFIC CONTROL DEVICES" AND REQUIRED BY THE PROJECT ENGINEER SHALL BE INSTALLED AT NO ADDITIONAL COST TO THE DEPARTMENT.

STATE OF LOUISIANA
CHARLES W. ADAMS, III
REG. No. 27440
REGISTERED PROFESSIONAL ENGINEER IN CIVIL ENGINEERING

Charles W. Adams III
6/2/03

SHEET NUMBER	46
PARISH	ST. CHARLES
FEDERAL PROJECT	4503(509)
STATE PROJECT	450-37-0020
DESIGNED	C. ADAMS
CHECKED	P. ALLAIN
DETAILED	D. SOWARDS
CHECKED	C. ADAMS
DATE	06/02/03
SHEET	87

REVISION DESCRIPTION | DATE | NO.

TRAFFIC CONTROL LAYOUT FOR WORK AREA THROUGH RAMP ENTRANCE TAPER

SPECIAL DETAIL | TC-08

TRAFFIC ENGINEERING

FREEWAY EXIT WITH RIGHT LANE CLOSED

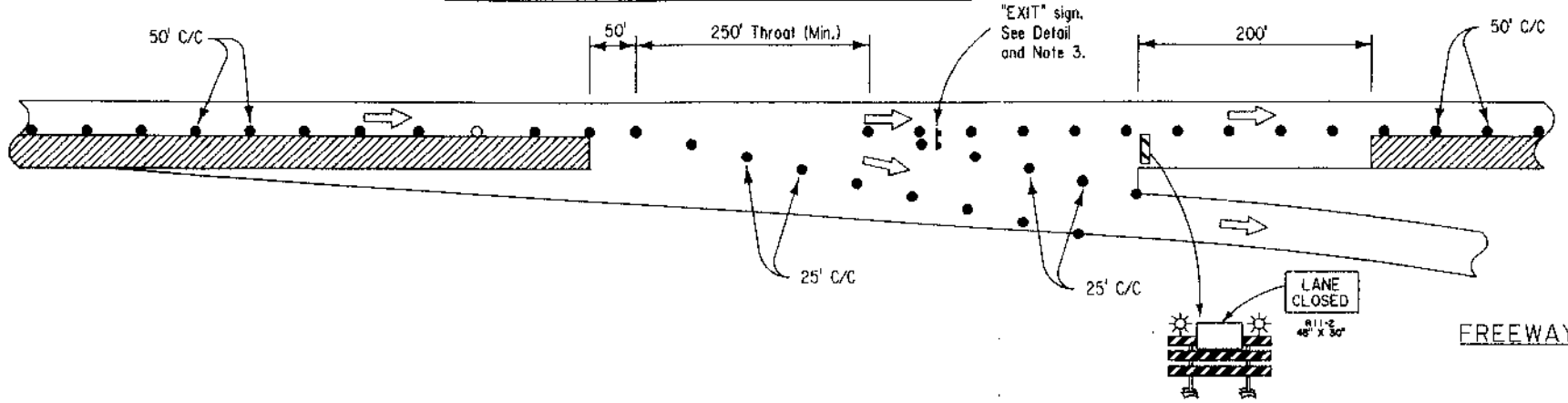

LEGEND

- Traffic Sign
- Channelizing Devices
- Work Area
- Type III Barricades
- Temporary Traffic Barrier

FREEWAY EXIT WITH LEFT LANE CLOSED

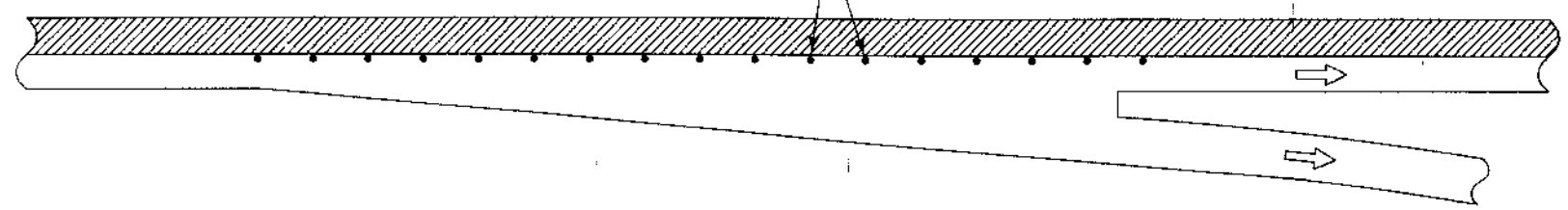

FREEWAY EXIT VIA MEDIAN CROSSOVER

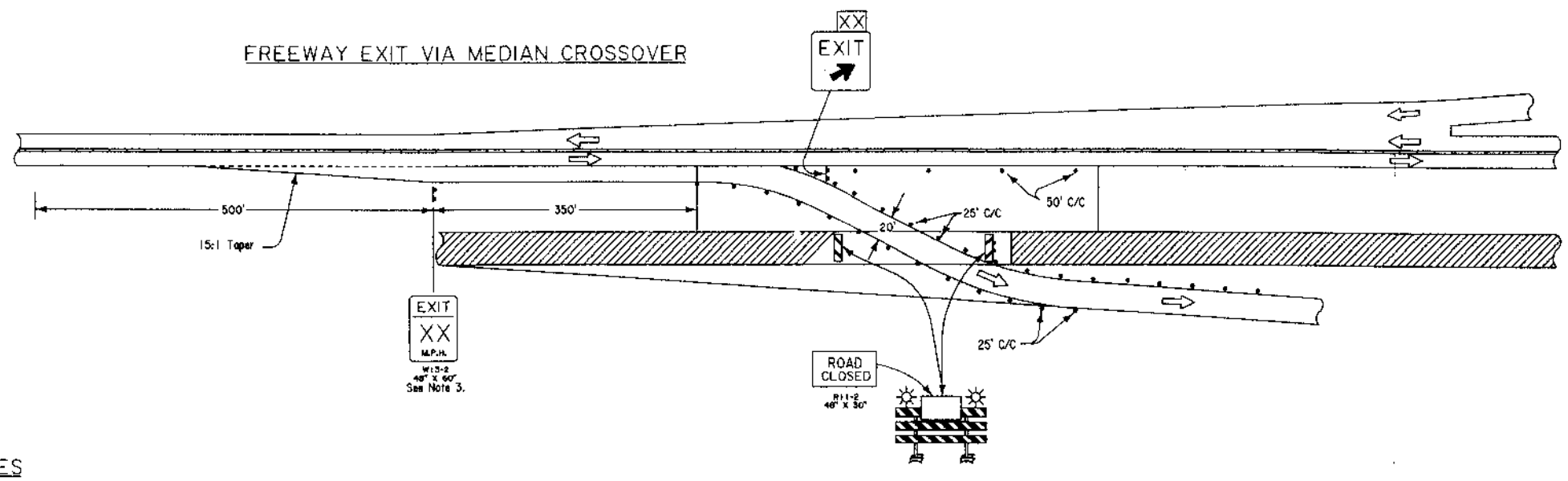

NOTES

THIS SHEET SHALL BE USED WITH THE "TEMPORARY TRAFFIC CONTROL GENERAL NOTES SHEET (TC-00)".

1. FOR MAINLINE LANE CLOSURES SEE OTHER SHEETS.
2. CHANNELIZING DEVICES ON THE LANE LINE SHALL BE OF THE SAME TYPE. CHANNELIZING DEVICES IN EACH TAPER SHALL BE OF THE SAME TYPE.
3. THE MOUNTING HEIGHT OF THE TEMPORARY "EXIT" SIGN SHALL BE A MINIMUM OF 7 FEET FROM THE PAVEMENT SURFACE TO THE BOTTOM OF THE SIGN. THE EXISTING GREEN AND WHITE "EXIT" SIGN SHALL BE COVERED. IF THE TEMPORARY "EXIT" SIGN WILL BE IN PLACE FOR MORE THAN ONE DAY, AN "EXIT NUMBER PANEL" DISPLAYING THE PROPER EXIT NUMBER SHALL BE PLACED ABOVE THE TEMPORARY "EXIT" SIGN.
4. EXIT SPEED TO BE SET ACCORDING TO DESIGN CRITERIA FOR THE CROSSOVER.
5. ANY SIGNS IN CONFLICT WITH CONSTRUCTION SIGNING SHALL BE REMOVED OR COVERED.
6. MINIMUM CONSTRUCTION SIGNING: ANY ADDITIONAL SIGNS SHOWN IN THE "MANUAL ON UNIFORM TRAFFIC CONTROL DEVICES" AND REQUIRED BY THE PROJ CT ENGINEER SHALL BE INSTALLED AT NO ADDITIONAL COST TO THE DEPARTMENT.

STATE OF LOUISIANA
CHARLES W. ADAMS, III
REG. No. 27440
REGISTERED PROFESSIONAL ENGINEER IN CIVIL ENGINEERING

Charles W. Adams III
6/3/03

SHEET NUMBER	47
PARISH	ST. CHARLES
FEDERAL PROJECT	4503(504)
STATE PROJECT	450-37-0020
DESIGNED	C. ADAMS
CHECKED	P. ALLAIN
DETAILED	D. SOWARDS
CHECKED	C. ADAMS
DATE	06/02/03
SHEET	

NO.	DATE	REVISION DESCRIPTION	BY

TRAFFIC CONTROL LAYOUT FOR WORK AREA THROUGH RAMP EXIT TAPER

TC-09

TRAFFIC ENGINEERING

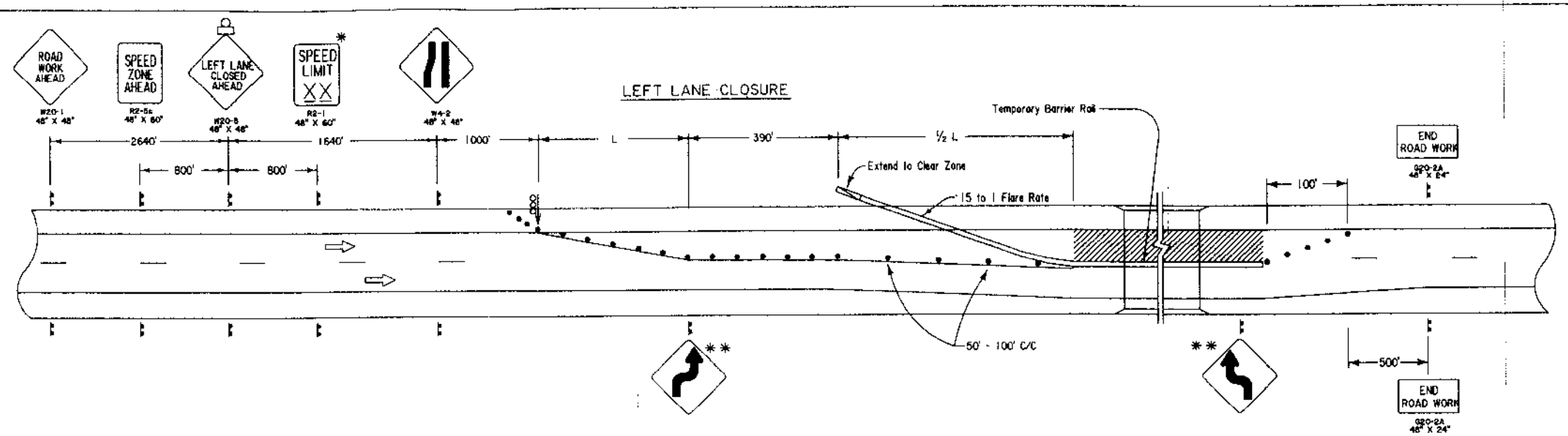

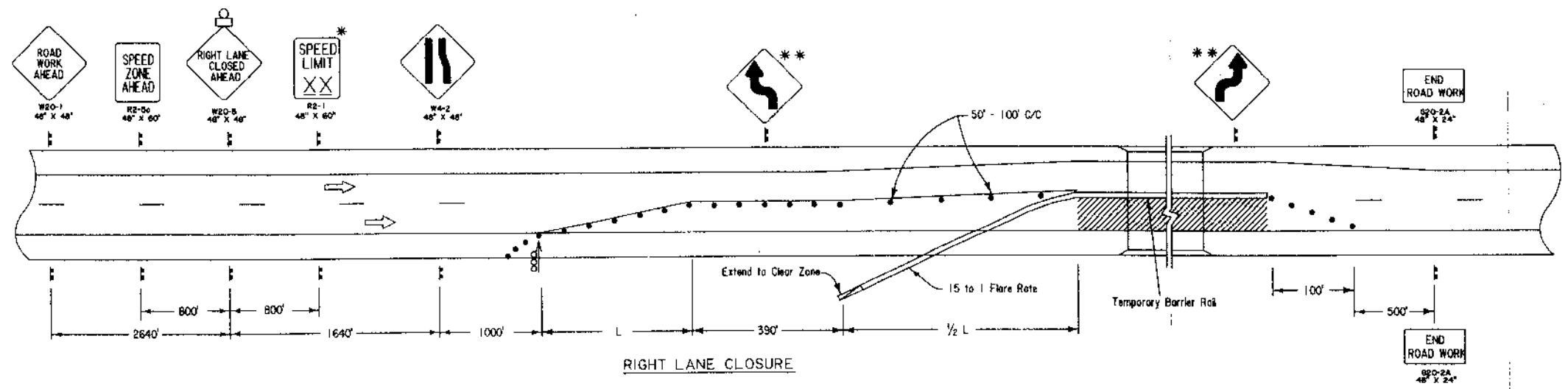

RIGHT LANE CLOSURE

SPEED LIMIT	55	60	65	70
L =	660'	720'	780'	840'

LEGEND

- Traffic Sign
- Channelizing Devices
- Flashing Arrow Panel (Type 'C')
- Work Area
- Type B Light

NOTES

THIS SHEET SHALL BE USED WITH THE "TEMPORARY TRAFFIC CONTROL GENERAL NOTES SHEET (TC-00)".

1. THE MAXIMUM SPACING BETWEEN CHANNELIZING DEVICES IN A MERGING TAPER SHALL BE APPROXIMATELY EQUAL IN FEET TO THE SPEED LIMIT.
2. CHANNELIZING DEVICES ON THE LANE LINE SHALL BE OF THE SAME TYPE. CHANNELIZING DEVICES IN EACH TAPER SHALL BE OF THE SAME TYPE.
3. IF A RAMP ENTRANCE OR EXIT TAPER FALLS WITHIN THE WORK AREA, REFER TO STANDARD ROAD PLAN TC-08 AND TC-09 FOR TRAFFIC CONTROL DETAILS.
4. DOWNSTREAM TAPERS SHALL CONTAIN A MINIMUM OF 4 CHANNELIZING DEVICES.
5. BROKEN LANE LINE SHALL BE REMOVED IN AREA OF TAPER.
6. REFLECTORS SHALL BE MOUNTED BACK-TO-BACK ON EACH SECTION OF TEMPORARY BARRIER RAIL. REFLECTORS SHALL FACE ONCOMING TRAFFIC AS INDICATED.
7. PARKING OF VEHICLES OR UNATTENDED EQUIPMENT, OR STORAGE OF MATERIALS, WITHIN THE CLEAR ZONE SHALL NOT BE PERMITTED UNLESS PROTECTED BY FUNCTIONING BARRIER RAIL.
8. ANY SIGNS IN CONFLICT WITH CONSTRUCTION SIGNING SHALL BE REMOVED OR COVERED.
9. MINIMUM CONSTRUCTION SIGNING: ANY ADDITIONAL SIGNS SHOWN IN THE "MANUAL ON UNIFORM TRAFFIC CONTROL DEVICES" AND REQUIRED BY THE PROJECT ENGINEER SHALL BE INSTALLED AT NO ADDITIONAL COST TO THE DEPARTMENT.

* SPEED LIMIT IS TO BE 10 MPH LESS THAN ORIGINAL SPEED

** TO BE USED ONLY WHEN A LANE SHIFT IS UTILIZED

STATE OF LOUISIANA
CHARLES W. ADAMS, III
REG. No. 27440
REGISTERED PROFESSIONAL ENGINEER IN CIVIL ENGINEERING

Charles W. Adams III
6/4/03

SHEET NUMBER	48
PARISH	ST. CHARLES
FEDERAL PROJECT	4563(609)
STATE PROJECT	450-31-0020
DESIGNED	C. ADAMS
CHECKED	P. ALLAIN
DETAILED	D. SOWARDS
CHECKED	C. ADAMS
DATE	06/02/03
SHEET	

NO. | DATE | REVISION DESCRIPTION | BY

TRAFFIC CONTROL LAYOUT FOR LANE CLOSURE USING TEMPORARY BARRIER RAIL 60 MPH AND GREATER

SPECIAL DETAIL

TC-11

TRAFFIC ENGINEERING

FAP	STATE PROJECT	PARISH	SHEET NO.
F-210-4(38)223	450-37-02	ST. CHARLES	108

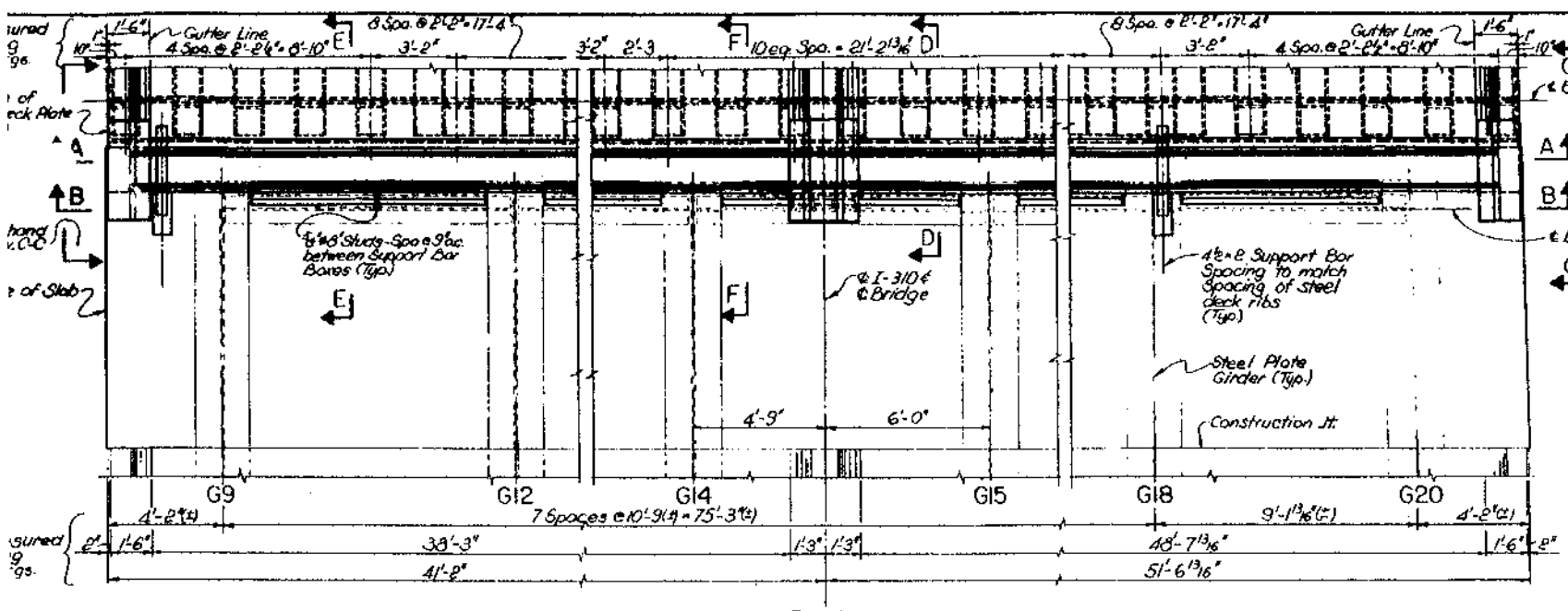

PLAN
Scale: ⅛" = 1'-0"

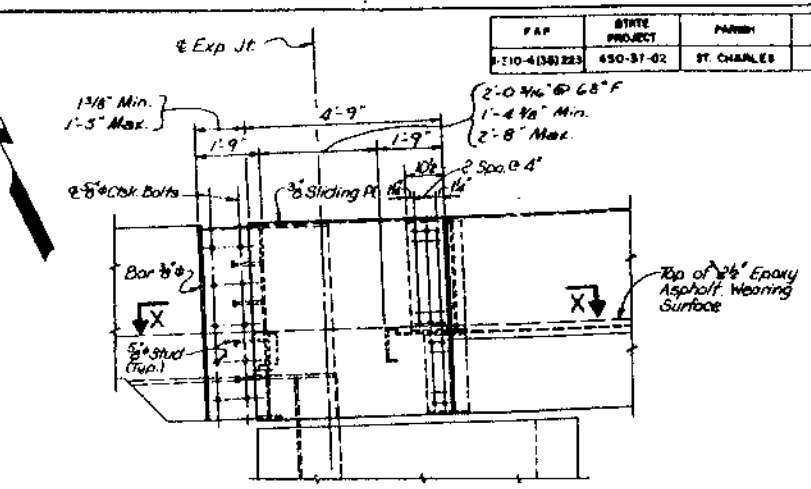

ELEVATION C-C (As shown)
ELEVATION D-D (Similar)
Scale: ½" = 1'-0"

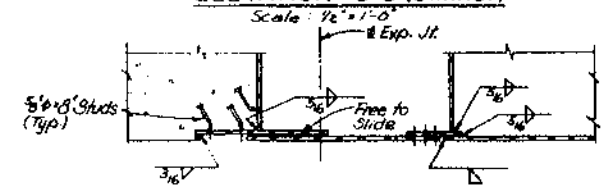

SECTION X-X
Scale: ½" = 1'-0"

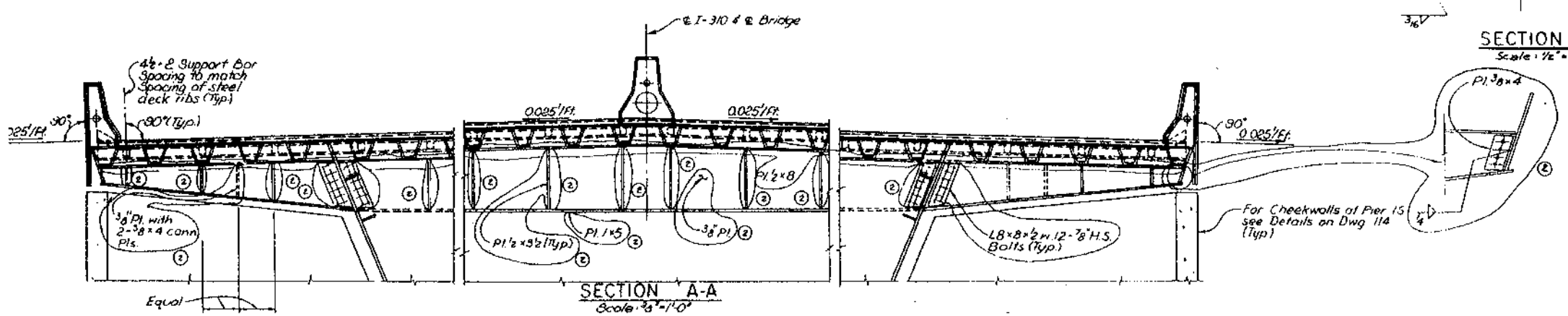

SECTION A-A
Scale: ¾" = 1'-0"

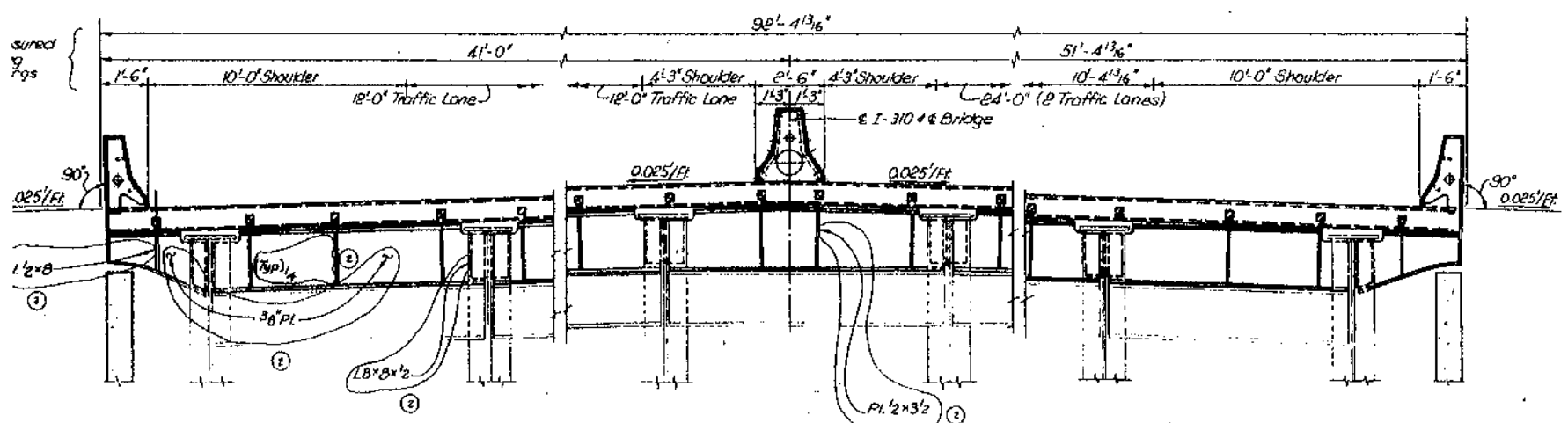

SECTION B-B
Scale: ¾" = 1'-0"

NOTES:
For General Notes, see Sheet No. 2
For Joint Installation and Miscellaneous Joint Details, see Dwg. No. 106.
Expansion Joint as shown on this plan is as manufactured by ACME Highway Prod.
No alternates will be allowed for this joint.

FOR INFORMATIONAL PURPOSES ONLY

DATE	DESCRIPTION	BY
3-14-78	General	F.H.L.
7-10-78	General	D.T.D.

REVISIONS

STATE OF LOUISIANA
DEPARTMENT OF HIGHWAYS

EXPANSION JOINT E1
MAIN RIVER CROSSING SUPERSTRUCTURE
MISSISSIPPI RIVER BRIDGE (LULING)

FRANKLAND AND LIENHARD · WOJNESKI AND MASTERS
CONSULTING ENGINEERS

DATE 6-24-77 | SCALE As Shown | DWG. NO. 105
DRAWN BY A.D. | CHKD. BY R.D. | IN CHARGE S.J. | APPROVED

HUVAL & ASSOCIATES, INC. Consulting Engineers

SHEET NUMBER	101
PARISH	ST. CHARLES
FEDERAL PROJECT	450(508)
STATE PROJECT	450-37-0020
DESIGNED	MH
CHECKED	JT
DETAILED	TB
CHECKED	MH
DATE	12-11-02
SCALE	N.T.S.

REVISION DESCRIPTION | DATE | NO.

MISSISSIPPI RIVER BRIDGE (LULING)
DECK TEST SECTION AND JOINT REPAIRS
EXPANSION JOINT E1
SOUTH END OF BRIDGE

X:\HUVAL Projects\3154 (Luling)\CORE DWGS\revised 1-31-04\101E1-14 Reference.dwg Layout1, 02/25/2004 10:51:59 AM

FAP	STATE PROJECT	PARISH	SHEET NO
F-340-4(38)223	450-37-02	ST. CHARLES	106 A

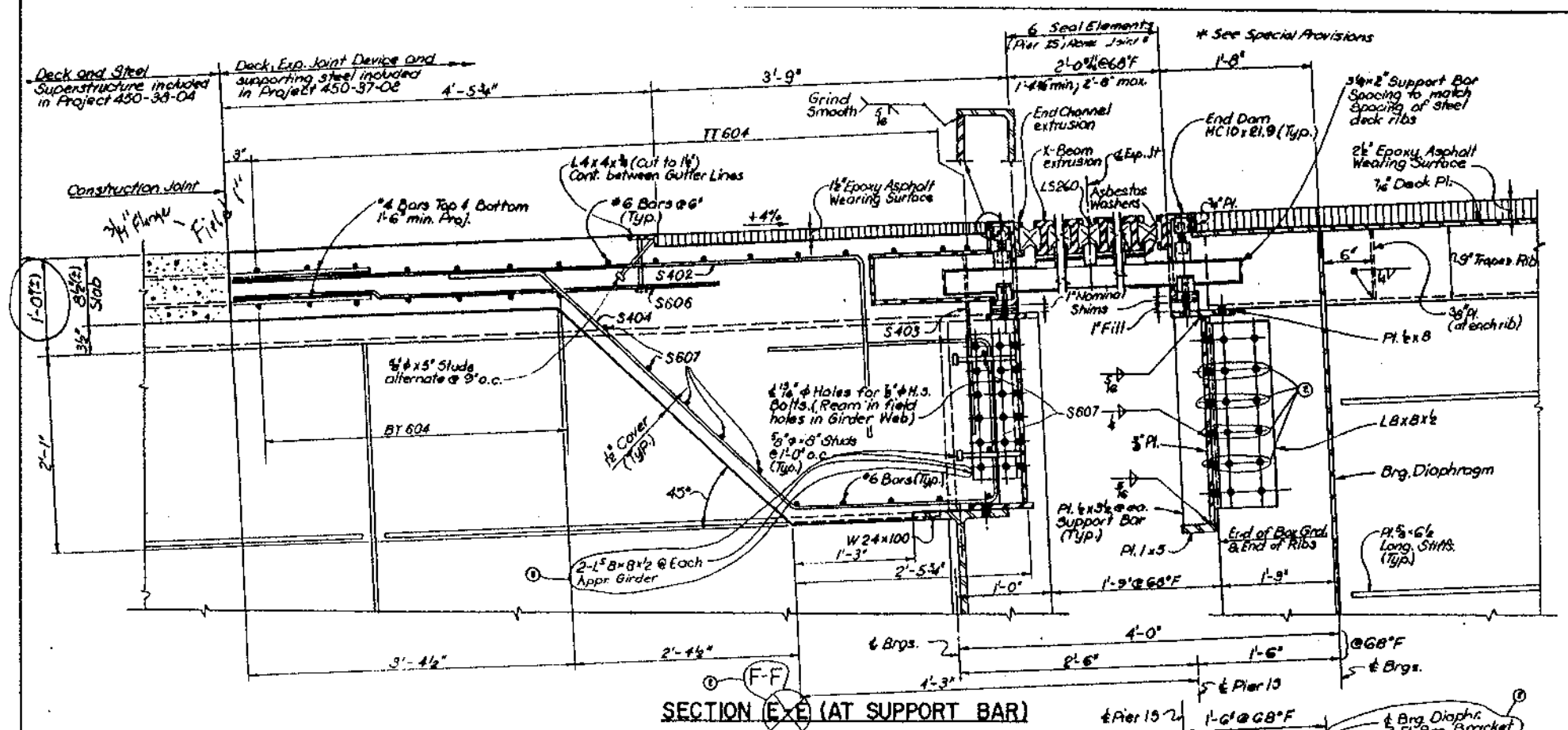

SECTION (E-E) (AT SUPPORT BAR)

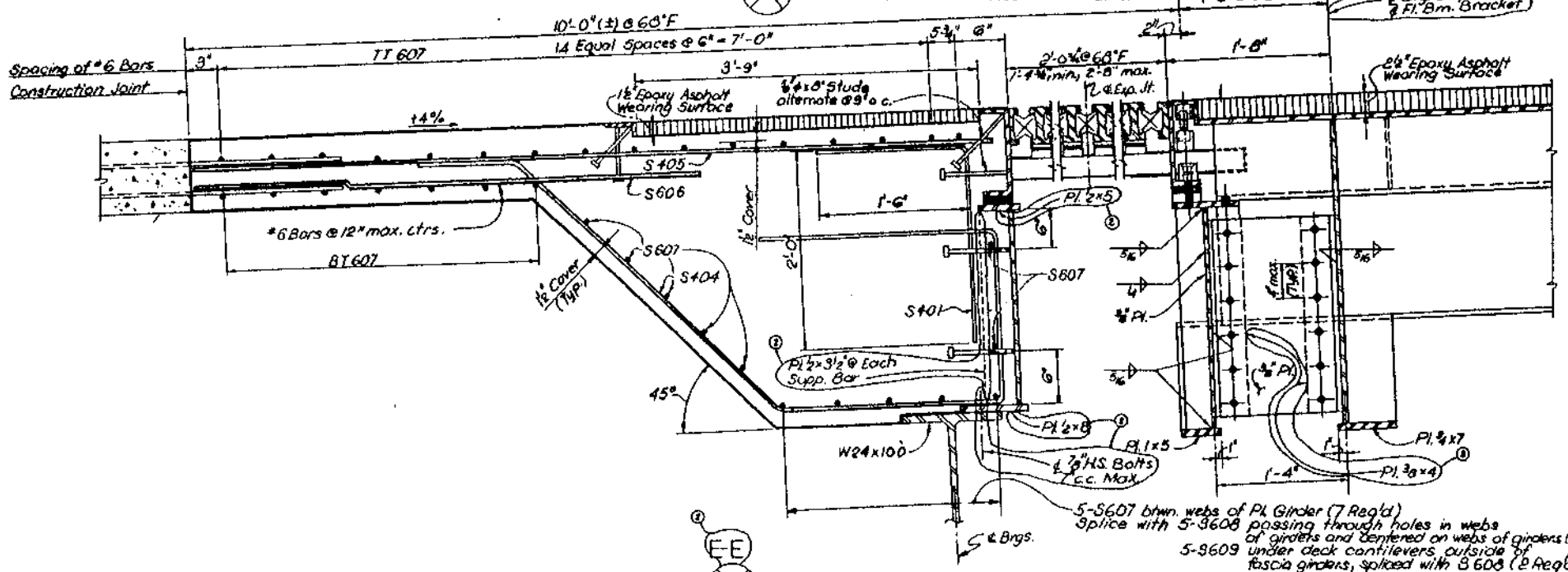

SECTION (F-F) (BETWEEN SUPPORT BARS)

FOR INFORMATIONAL PURPOSES ONLY

NOTES:
For General Notes see Dwg. No. 2.

DATE	DESCRIPTION	BY
5-23-78	New Sheet (See Sh. 106)	F.E.
5-14-79	GENERAL	F.E.
10-4-79	General	D.A.F.

REVISIONS

STATE OF LOUISIANA
DEPARTMENT OF HIGHWAYS

EXPANSION JOINT E1
MAIN RIVER CROSSING SUPERSTRUCTURE
MISSISSIPPI RIVER BRIDGE (LULING)

FRANKLAND AND LIENHARD - MOOJESKI AND MASTERS
CONSULTING ENGINEERS

DATE 5-24-77 | SCALE 1/2" = 1'-0" | DWG NO. 106 A
DRAWN BY F.T. | CHKD BY R.D. | IN CHARGE S.J. | APPROVED MHL

HUVAL & ASSOCIATES, INC. Consulting Engineers

SHEET NUMBER	102
PARISH	ST. CHARLES
FEDERAL PROJECT	450(35(509)
STATE PROJECT	450-37-0020
DESIGNED	MH
CHECKED	DT
DETAILED	TB
CHECKED	MH
DATE	12-11-02
SCALE	N.T.S.

MISSISSIPPI RIVER BRIDGE (LULING)
DECK TEST SECTION AND JOINT REPAIRS
EXPANSION JOINT E1 SOUTH END OF BRIDGE

X:\HUVAL Projects\3154 (Luling)\CORE DWGS\Revised 1-8-04\102\E1-Reference.dwg, Layout1, 10/25/2004 10:53:04 AM

FAP	STATE PROJECT	PARISH	SHEET NO.
I-310-4(351)223	450-37-02	ST. CHARLES	41

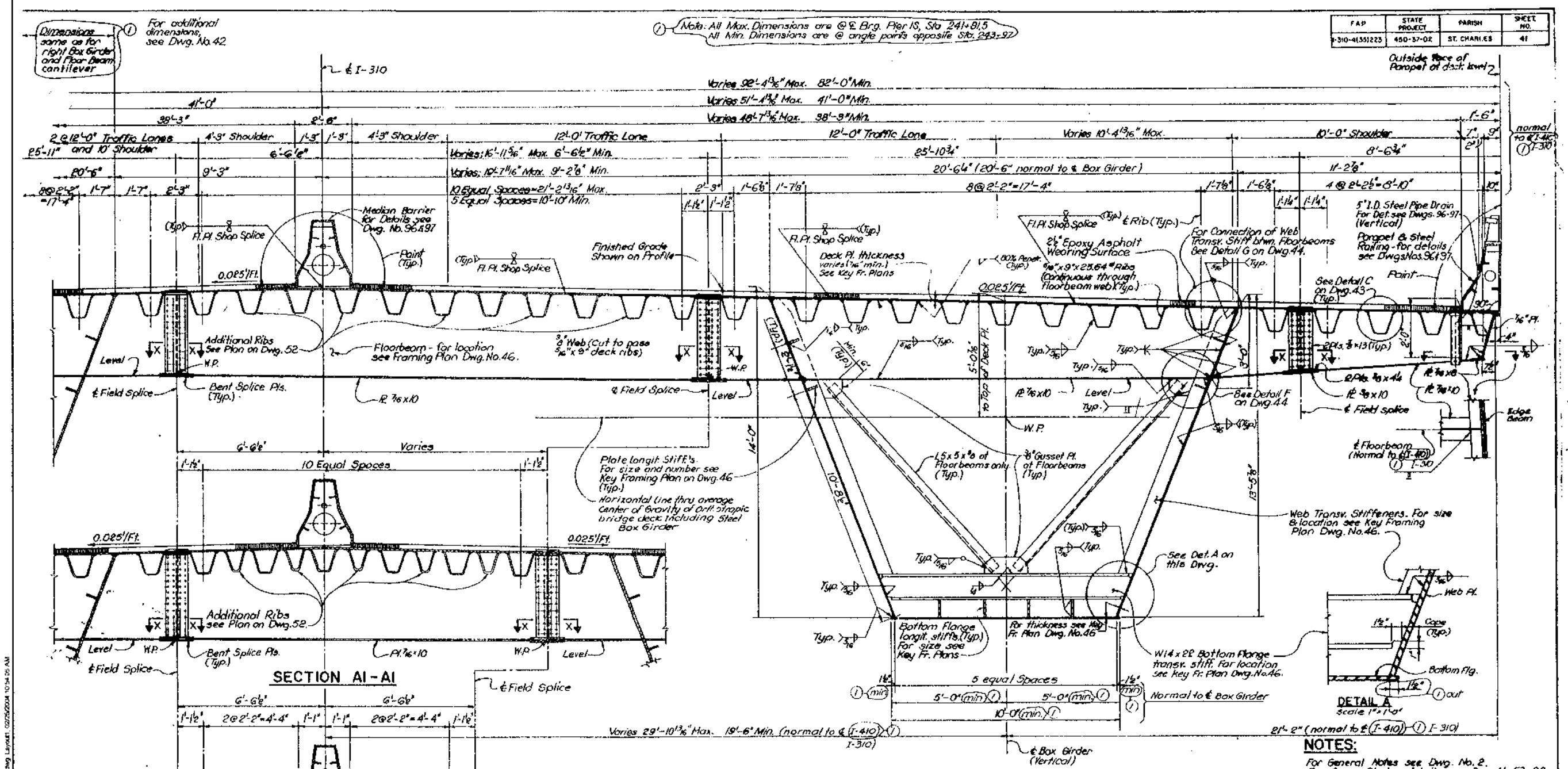

NOTES:

For General Notes see Dwg. No. 2.
For Cross Girder details see Dwg. No. 53-88.
For Box Girder Diaphragm details see Dwgs. Nos. 93 & 94.
For Orthotropic Deck details see Dwg. No. 90.
For Section X-X see detail on Dwg. 42

(1)	2/14/08	Minor Revision	F.B.L.
	DATE	DESCRIPTION	BY
		REVISIONS	

STATE OF LOUISIANA
DEPARTMENT OF HIGHWAYS

TYPICAL CROSS SECTION SPAN IM
MAIN RIVER CROSSING SUPERSTRUCTURE
MISSISSIPPI RIVER BRIDGE (LULING)

FRANKLAND AND LIENHARD - MODJESKI AND MASTERS
CONSULTING ENGINEERS

DATE: 5-24-77 | SCALE: 3/8" = 1'-0" | DWG. NO. 41
DRAWN BY: L.Z. | CHKD. BY: R.O. | IN CHARGE: S.J. | APPROVED: W.A.F.C.

HUVAL & ASSOCIATES, INC. Consulting Engineers

MISSISSIPPI RIVER BRIDGE (LULING)
DECK TEST SECTION AND JOINT REPAIRS
EXPANSION JOINT E1

SHEET NUMBER	103
ST. CHARLES	450-3(509)	450-37-0020
PARISH	FEDERAL PROJECT	STATE PROJECT
MH	DT	TB	MH	12-11-02 N.T.S.
DESIGNED	CHECKED	DETAILED	CHECKED	DATE	SCALE	BY
REVISION DESCRIPTION	DATE	NO.

X:\HUVAL Projects\3154 (Luling)\CORE DWGS\Immast 1-8-04\103.DGN | Reference: dwg Layout: 103 2/26/2004 10:34:05 AM

FAP	STATE PROJECT	PARISH	SHEET NO.
I-310-4(351223)	450-37-02	ST. CHARLES	42

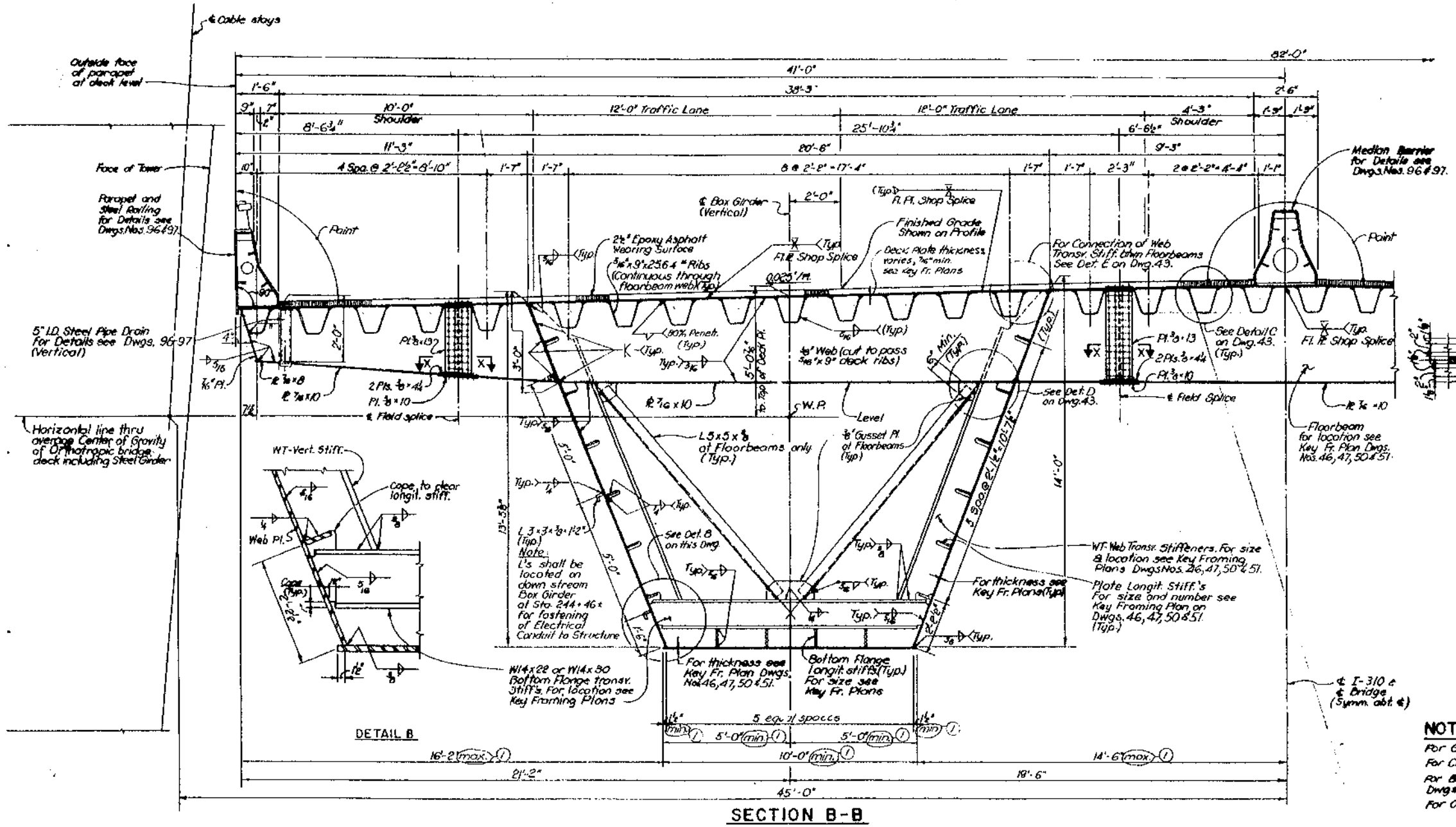

NOTES:

For General Notes see Dwg. No. 2.
For Cross Girder details see Dwgs. Nos. 53-88.
For Box Girder diaphragm details see Dwgs. Nos. 93 & 94.
For Orthotr. Deck details see Dwg. 90.

FOR INFORMATIONAL PURPOSES ONLY

DATE	DESCRIPTION	BY
2/2/78	Minor Revision	F.B.L.

REVISIONS

STATE OF LOUISIANA
DEPARTMENT OF HIGHWAYS

TYPICAL CROSS SECTION SPAN 1M, 2M, 4M & 5M
MAIN RIVER CROSSING SUPERSTRUCTURE
MISSISSIPPI RIVER BRIDGE (LULING)

FRANKLAND AND LIEBHARD - MODJESKI AND MASTERS
CONSULTING ENGINEERS

DATE 3-24-77 | SCALE ½"=1'-0" | DWG NO. 42
DRAWN BY R.R. | CHKD BY R.D. | IN CHARGE S.J. | APPROVED M.H.L.

SHEET NUMBER	104
PARISH	ST. CHARLES
FEDERAL PROJECT	4503(569)
STATE PROJECT	450-37-0020
DESIGNED MH	
CHECKED DT	
DETAILED TB	
CHECKED MT	
DATE 12-11-02	
SCALE N.T.S.	

REVISION DESCRIPTION | DATE | NO.

MISSISSIPPI RIVER BRIDGE (LULING)
DECK TEST SECTION AND JOINT REPAIRS
EXPANSION JOINT E1

HUVAL & ASSOCIATES, INC. Consulting Engineers

X:\HUVAL Projects\13-34 (Luling)\CORE DWGs\revised 1-8-04\LOUIE1-Reference.dwg, Layout1, 02/25/2004 10:55:19 AM

FAP	STATE PROJECT	PARISH	SHEET NO.
I-310 (139)223	450-37-02	ST CHARLES	49

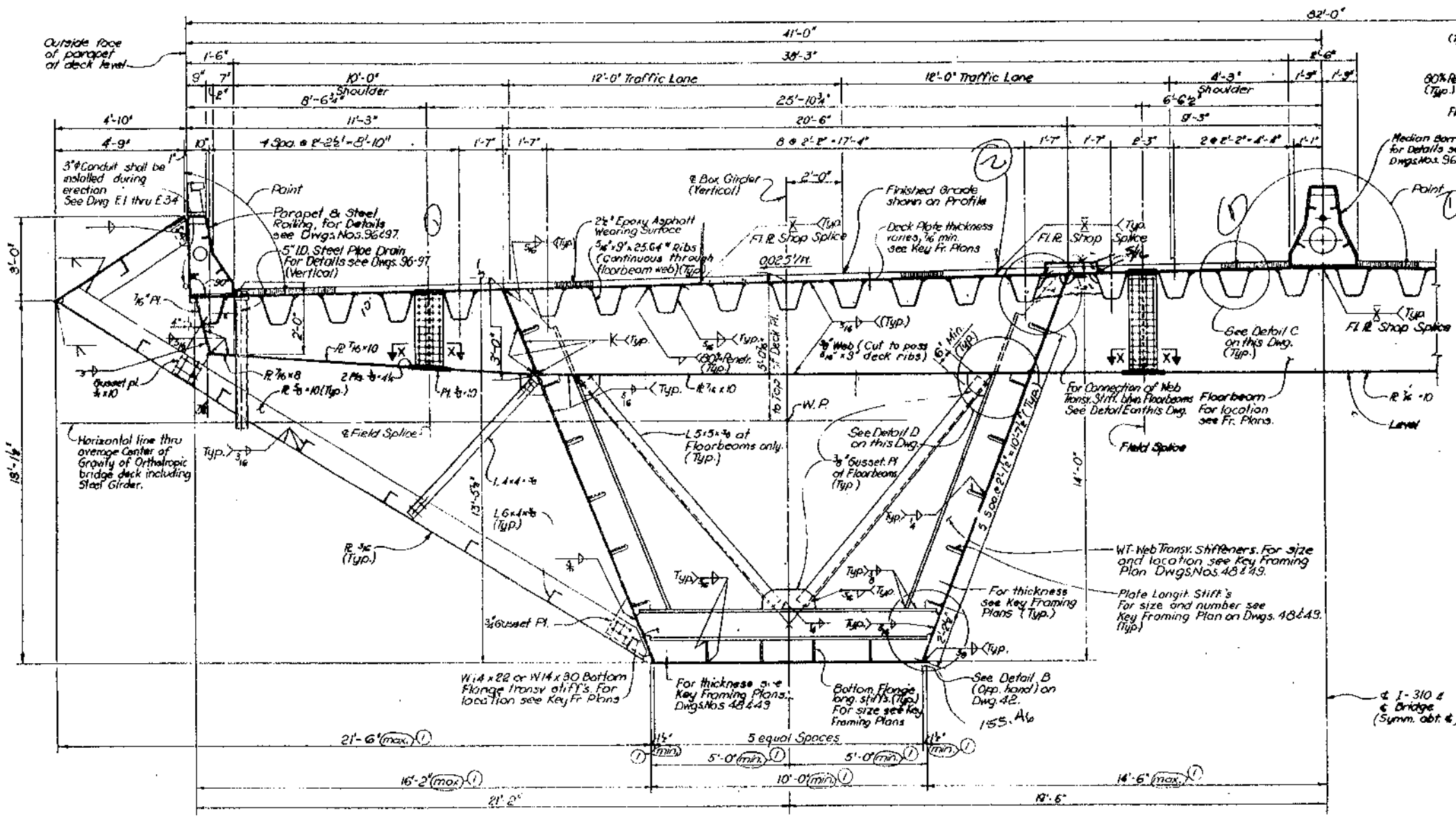

SECTION C-C

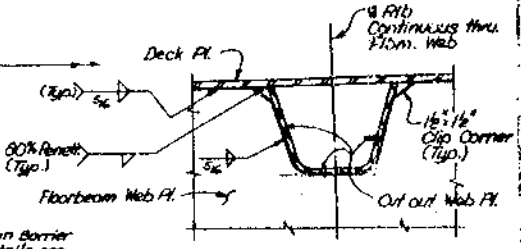

DETAIL C
Scale: 1½" = 1'-0"

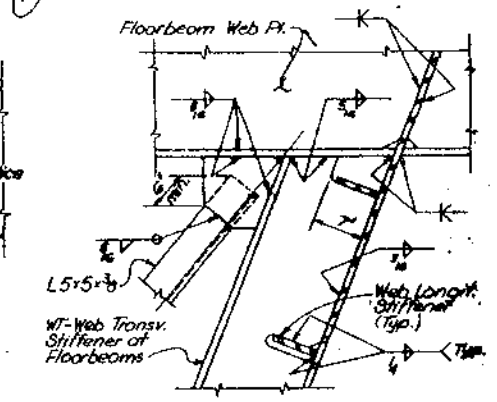

DETAIL D
Scale: 1" = 1'-0"

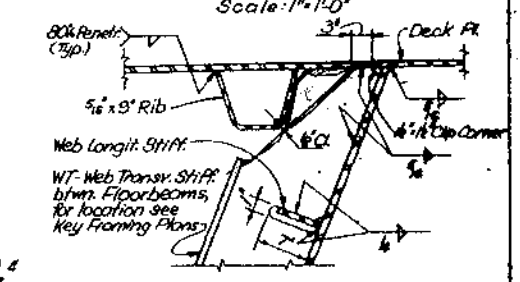

DETAIL E
Scale: 1" = 1'-0"

NOTES:

For General Notes see Dwg. No. 2.
For Cross Girder details see Dwgs. Nos. 53-88.
For Box Girder diaphragm details see Dwgs. Nos. 93 & 94.
For Orthotr. Deck detail see Dwg. No. 90.
For Section X-X see detail on Dwg. 42.

FOR INFORMATIONAL PURPOSES ONLY

DATE	DESCRIPTION	BY
	Minor Revisions	FFL

REVISIONS

STATE OF LOUISIANA
DEPARTMENT OF HIGHWAYS

TYPICAL CROSS SECTION SPAN 3K
MAIN RIVER CROSSING SUPERSTRUCTURE
MISSISSIPPI RIVER BRIDGE (LULING)

FRANKLAND AND LEONARD - MOBILE, ALA. AND BATON ROUGE, LA.
CONSULTING ENGINEERS

DATE 5-24-77 SCALE 1"=1'-0" SHEET 49
DRAWN BY A.C. CHECKED BY B.H. IN CHARGE

SHEET NUMBER 105

ST. CHARLES	450-37-0020
450-37(509)	
PARISH	FEDERAL PROJECT
STATE PROJECT	
MIN OF	TB MIN
DESIGNED	12-11-02
CHECKED	NTS
DETAILED	
CHECKED	
DATE	
SCALE	
BY	

REVISION DESCRIPTION | DATE | NO.

MISSISSIPPI RIVER BRIDGE (LULING)
DECK TEST SECTION AND JOINT REPAIRS
EXPANSION JOINT E1

HUVAL & ASSOCIATES, INC. Consulting Engineers

X:\HUVAL Projects\3154_Luling\CORE DWGS\revised 1-8-04\105E1-1.dgn Layout1 02/26/2004 02:56:06 AM

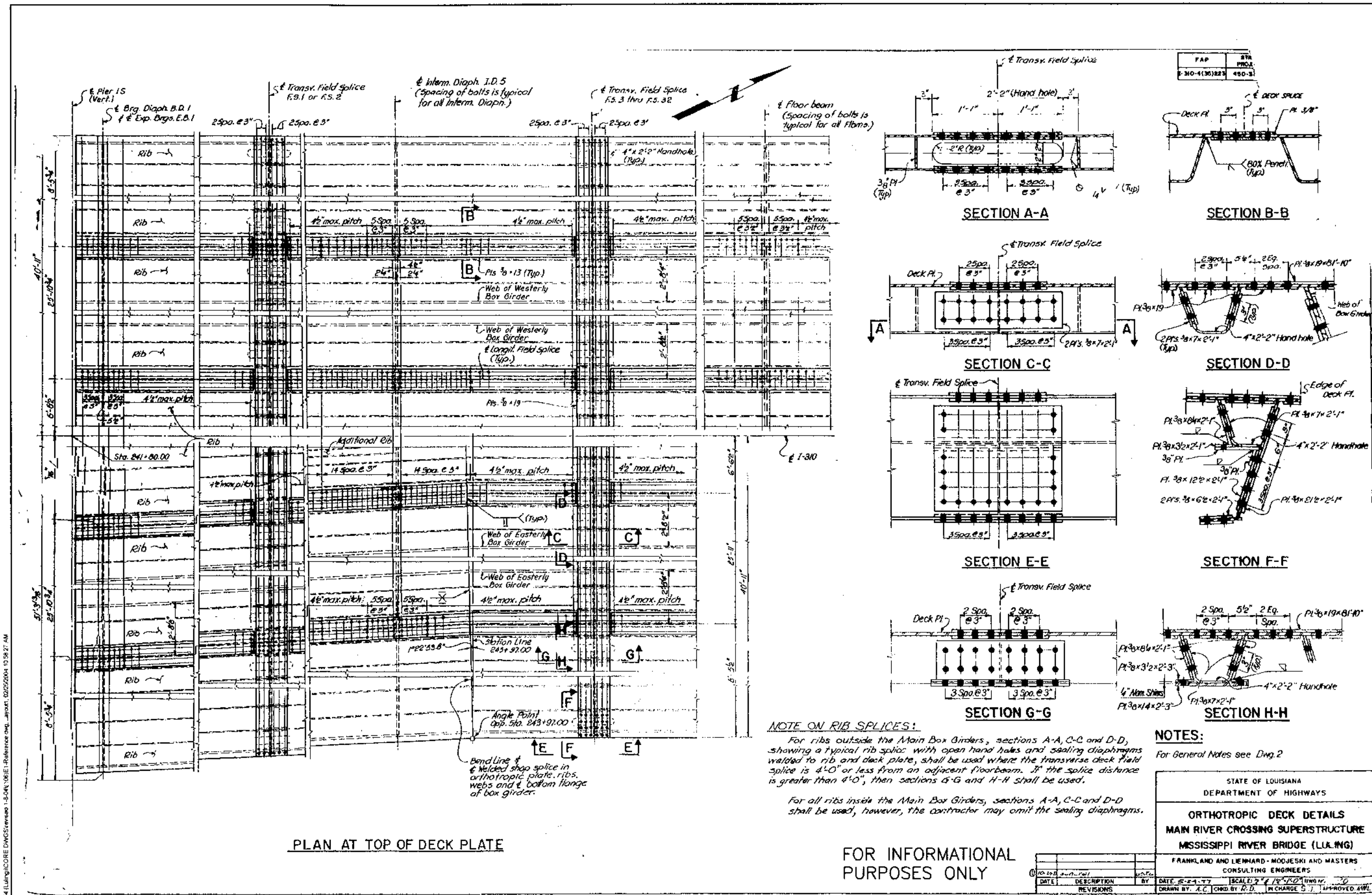

NOTE ON RIB SPLICES:

For ribs outside the Main Box Girders, sections A-A, C-C and D-D, showing a typical rib splice with open hand holes and sealing diaphragms welded to rib and deck plate, shall be used where the transverse deck field splice is 4'-0" or less from an adjacent floorbeam. If the splice distance is greater than 4'-0", then sections G-G and H-H shall be used.

For all ribs inside the Main Box Girders, sections A-A, C-C and D-D shall be used, however, the contractor may omit the sealing diaphragms.

NOTES:

For General Notes see Dwg. 2

FOR INFORMATIONAL PURPOSES ONLY

STATE OF LOUISIANA
DEPARTMENT OF HIGHWAYS

ORTHOTROPIC DECK DETAILS
MAIN RIVER CROSSING SUPERSTRUCTURE
MISSISSIPPI RIVER BRIDGE (LULING)

FRANKLAND AND LIENHARD - MODJESKI AND MASTERS
CONSULTING ENGINEERS

DATE	DESCRIPTION	BY
	REVISIONS	

DATE: 5-24-77 | SCALE: 2" = 1'-0" | DWG. NO. 6
DRAWN BY: A.C. | CHKD. BY: R.D. | IN CHARGE: S.J. | APPROVED: AWL

HALF SCALE PLANS

FAP	STA PROJ.
I-310-4(36)223	450-3

SHEET NUMBER 106

ST. CHARLES | 450(509) | 450-37-0020

PARISH | FEDERAL PROJECT | STATE PROJECT

MH DT | TB MH | 12-11-02 N.T.S.

DESIGNED CHECKED | DETAILED CHECKED | DATE SCALE

NO. | DATE | REVISION DESCRIPTION | BY

MISSISSIPPI RIVER BRIDGE (LULING)
DECK TEST SECTION
AND JOINT REPAIRS
EXPANSION JOINT E1

HUVAL & ASSOCIATES, INC. Consulting Engineers

X:\HUVAL Projects\3154 (Luling)\CORE DWGS\revised 1-8-04\106E1-Reference dwg_layout, 02/25/2004 10:38:27 AM

FAP	STATE PROJECT	PARISH	SHEET NO.
H.310-4(35)E25	450-87-02	ST. CHARLES	107A

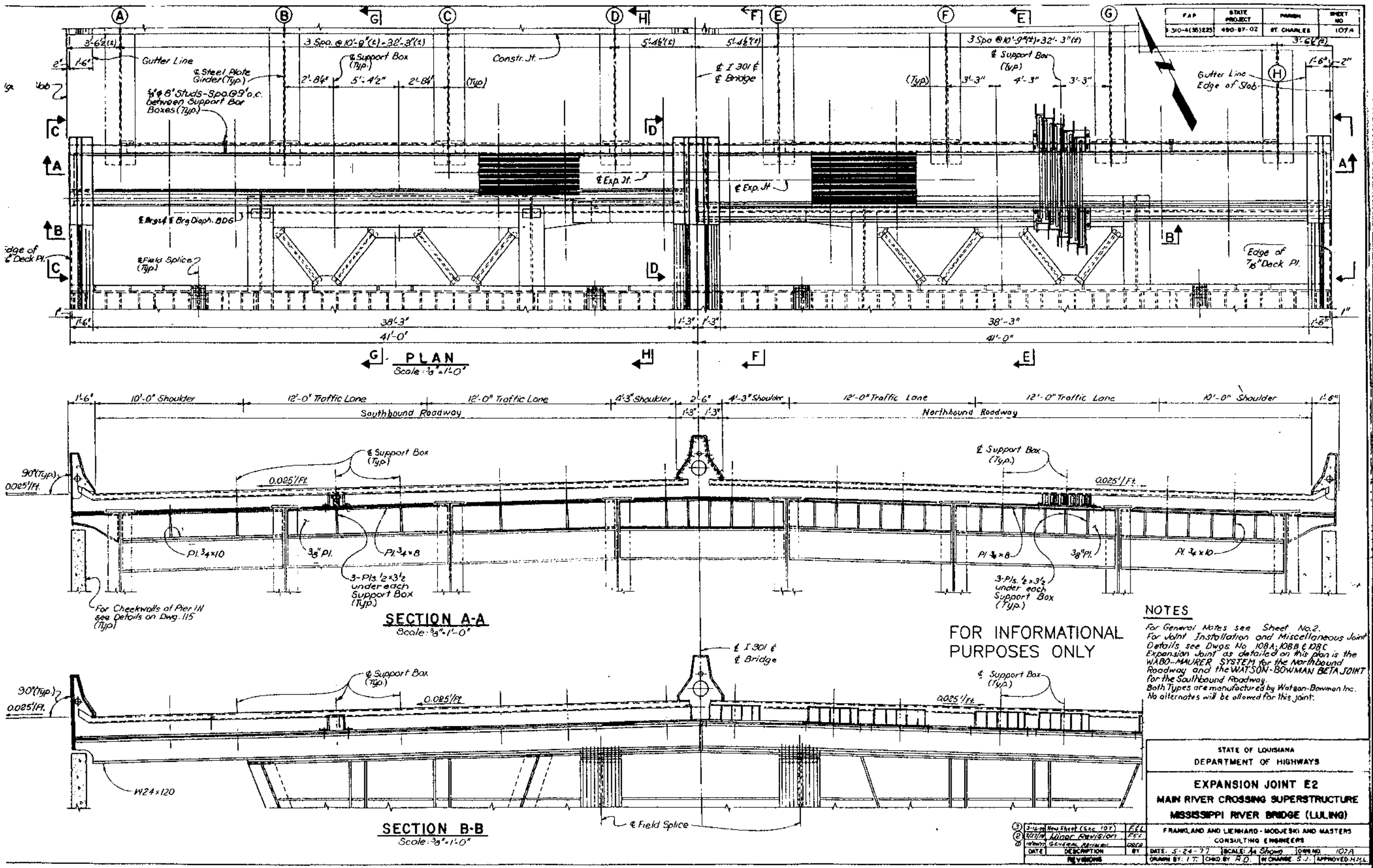

FOR INFORMATIONAL PURPOSES ONLY

NOTES

For General Notes see Sheet No. 2.
For Joint Installation and Miscellaneous Joint Details see Dwgs. No. 108A, 108B & 108C.
Expansion Joint as detailed on this plan is the WABO-MAURER SYSTEM for the Northbound Roadway and the WATSON-BOWMAN BETA JOINT for the Southbound Roadway.
Both Types are manufactured by Watson-Bowman Inc.
No alternates will be allowed for this joint.

STATE OF LOUISIANA
DEPARTMENT OF HIGHWAYS

EXPANSION JOINT E2
MAIN RIVER CROSSING SUPERSTRUCTURE
MISSISSIPPI RIVER BRIDGE (LULING)

FRANKLAND AND LIENHARD - MODJESKI AND MASTERS
CONSULTING ENGINEERS

REVISIONS			
3	3-16-78	New Sheet (Sec. 107)	FEL
2	12-21-77	Minor Revision	FEL
1	10-10-77	General Revision	DRB
DATE		DESCRIPTION	BY

DATE: 5-24-77 | SCALE: As Shown | DWG. NO. 107A
DRAWN BY: I.T. | CHKD. BY: R.D. | IN CHARGE: S.J. | APPROVED: H.M.L.

HUVAL & ASSOCIATES, INC. Consulting Engineers

SHEET NUMBER	107
ST. CHARLES	450(309)	450-37-0020
PARISH	FEDERAL PROJECT	STATE PROJECT
MH JT	TB MH	12-11-02 N.T.S.
DESIGNED CHECKED	DETAILED CHECKED	DATE SCALE

MISSISSIPPI RIVER BRIDGE (LULING)
DECK TEST SECTION AND JOINT REPAIRS

EXPANSION JOINT E2 REPLACEMENT NORTH END OF BRIDGE

NO. | DATE | REVISION DESCRIPTION | BY

X:\HUVAL Projects\3154 (Luling)\CORE DWGS\revised 1-5-04\107-E2-Reference.dwg, Layout1, 10/25/2004 11:30:08 AM

FAP	STATE PROJECT	PARISH	SHEET NO
F-810-4(28)(229)	450-37-02	ST CHARLES	108B

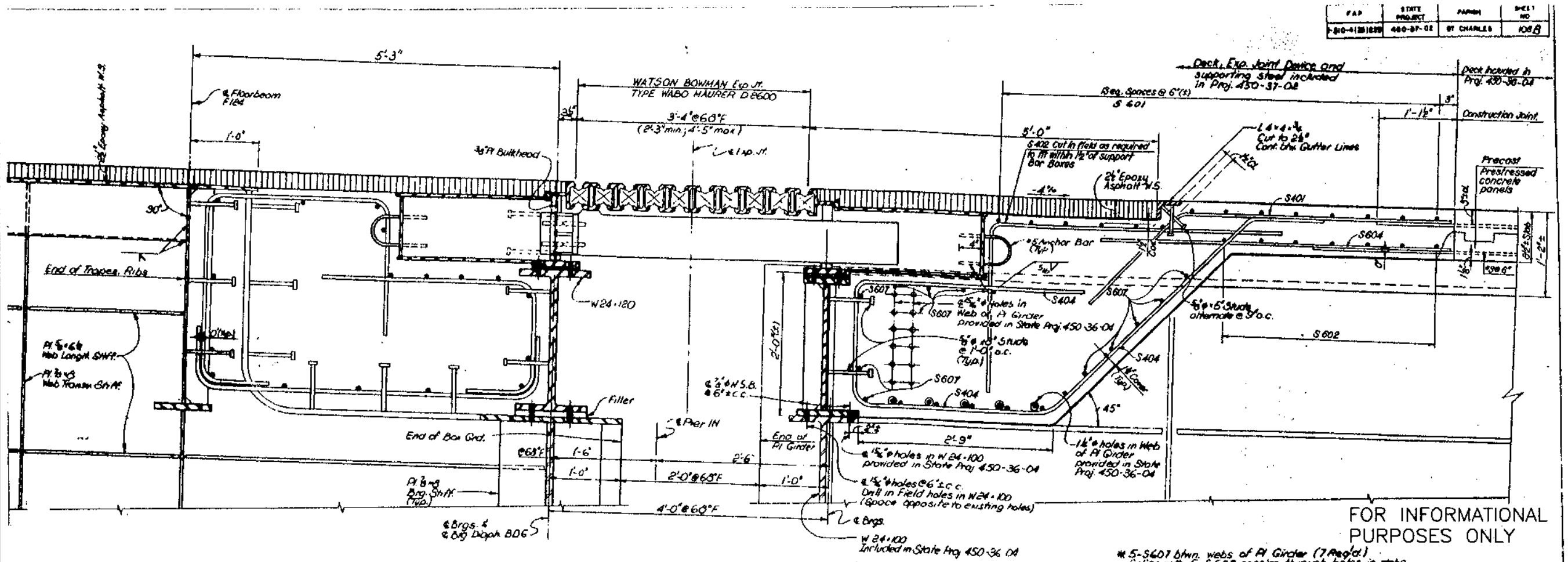

SECTION E-E (AT SUPPORT BAR BOX)

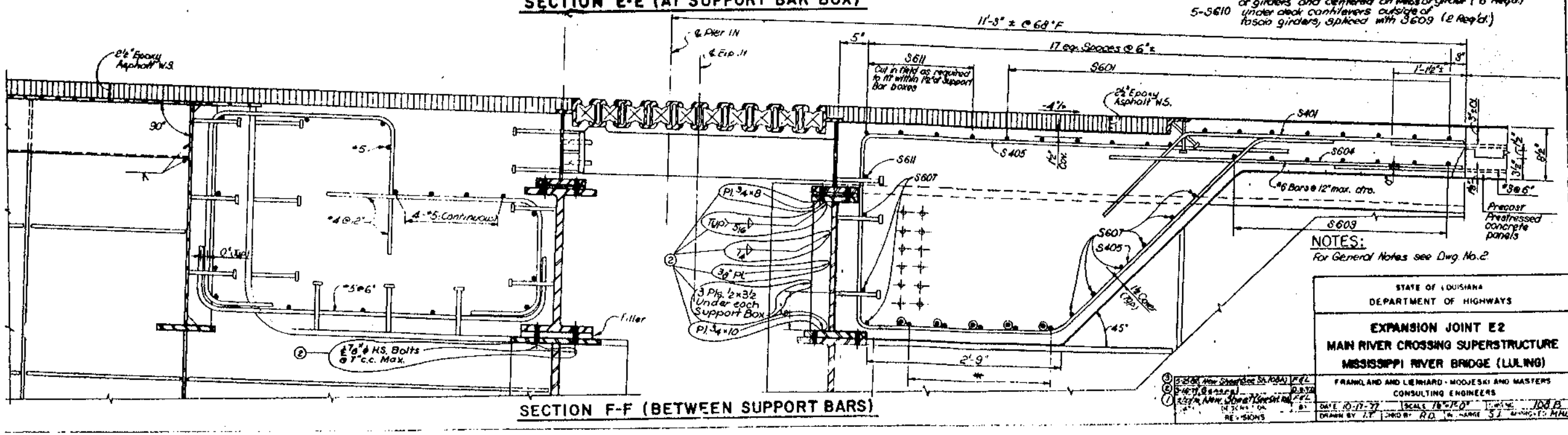

SECTION F-F (BETWEEN SUPPORT BARS)

NOTES:
For General Notes see Dwg. No. 2

STATE OF LOUISIANA
DEPARTMENT OF HIGHWAYS

EXPANSION JOINT E2
MAIN RIVER CROSSING SUPERSTRUCTURE
MISSISSIPPI RIVER BRIDGE (LULING)

FRANKLAND AND LIENHARD - MOOJESKI AND MASTERS
CONSULTING ENGINEERS

DATE 10-17-77 | SCALE 1/8"=1'-0" | SHEET NO. 108 B
DRAWN BY J.T. | CHKD BY R.D. | IN CHARGE S.J. | DWG. BY M.H.

HUVAL & ASSOCIATES, INC. Consulting Engineers

SHEET NUMBER 108

ST. CHARLES | 450(309) | 450-37-0020

PARISH | FEDERAL PROJECT | STATE PROJECT

MIS ST | TB | MH | 12-11-02 | N.T.S.

DESIGNED | CHECKED | DETAILED | CHECKED | DATE | SCALE | BY

REVISION DESCRIPTION | DATE | NO.

MISSISSIPPI RIVER BRIDGE (LULING)
DECK TEST SECTION AND JOINT REPAIRS

EXPANSION JOINT E2 REPLACEMENT NORTH END OF BRIDGE

X:\HUVAL Projects\3154 (Luling)\CORE DWGS\revised 1-8-04\108(E2-Reference.dwg, Layout1, 02/25/2004 11:01:26 AM

FAP	STATE PROJECT	PARISH	SHEET NO.
H-310-4(36)225	450-37-02	ST CHARLES	108 C

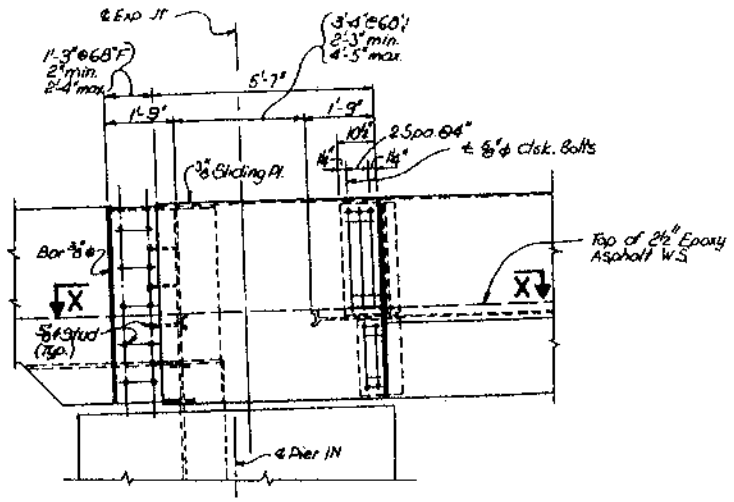

ELEVATION C-C (As shown)
ELEVATION D-D (Similar)
Scale: ½" = 1'-0"

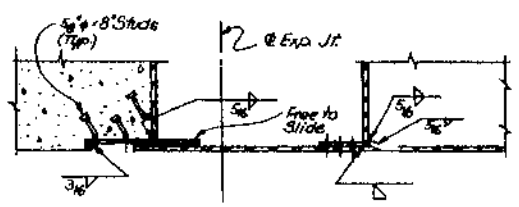

SECTION X-X
Scale: ½" = 1'-0"

FOR INFORMATIONAL PURPOSES ONLY

STATE OF LOUISIANA
DEPARTMENT OF HIGHWAYS

EXPANSION JOINT E2
MAIN RIVER CROSSING SUPERSTRUCTURE
MISSISSIPPI RIVER BRIDGE (LULING)

FRANKLAND AND LIERHARD - MODJESKI AND MASTERS
CONSULTING ENGINEERS

DATE	DESCRIPTION	BY
3-16-78	New Sheet 7	F.A.L.

REVISIONS

DATE 12-20-76 | SCALE As Shown | DWG NO 108 C
DRAWN BY J.T. | CHKD BY R.D. | IN CHARGE S.J. | APPROVED

NO.	DATE	REVISION DESCRIPTION	BY

DESIGNED MH | CHECKED DT
DETAILED TB | CHECKED MH
DATE 12-11-02 | SCALE N.T.S.

PARISH ST. CHARLES
FEDERAL PROJECT 450X(509)
STATE PROJECT 450-37-0020

SHEET NUMBER 109

MISSISSIPPI RIVER BRIDGE (LULING)
DECK TEST SECTION AND JOINT REPAIRS
EXPANSION JOINT E2 REPLACEMENT NORTH END OF BRIDGE

HUVAL & ASSOCIATES, INC.
Consulting Engineers

X:\HUVAL Projects\31-54 (Luling)\CORE DWGS\revised 1-8-04\139\B2-Reference.dwg, Layout1, 02/25/2004 11:02:33 AM

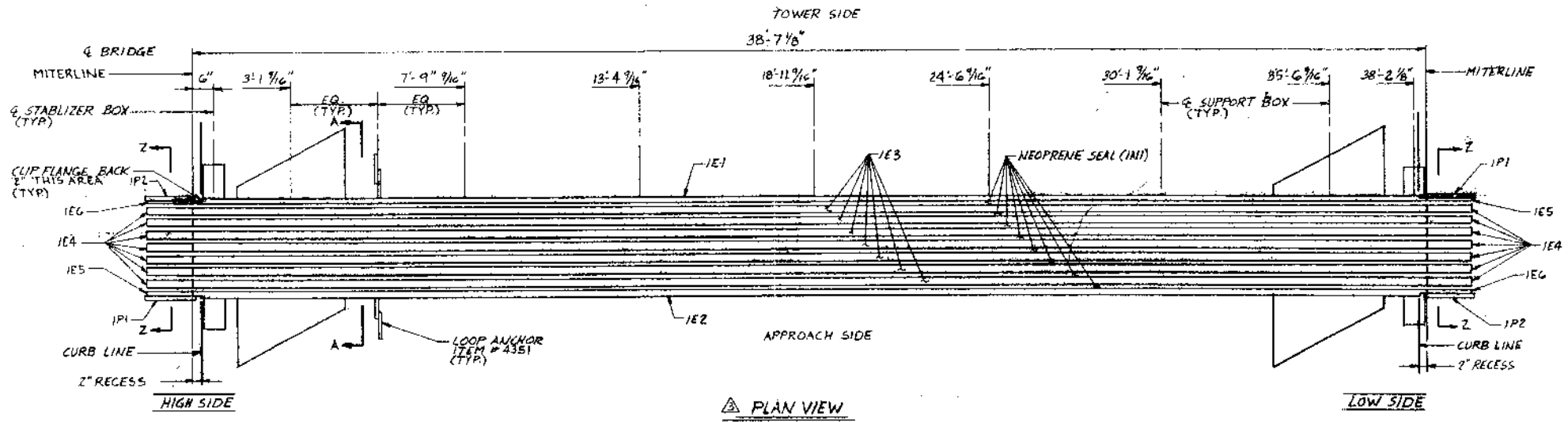

△3 PLAN VIEW
MOD19555AA - 1 REQ'D
PIER N1 SOUTHBOUND

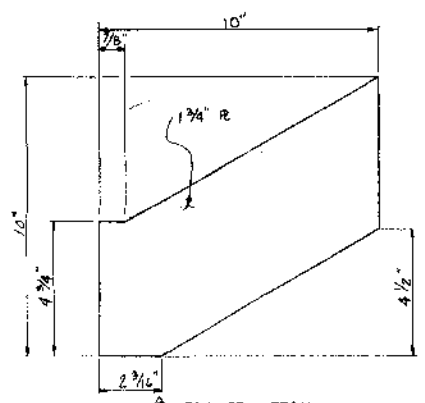

△3 1P1 & 1P2 DETAIL

TEMPERATURE ADJUSTMENT

THE CHANGE PER 10°F IS MEASURED PERPENDICULAR TO THE JOINT FOR BOTH NORMAL AND SKEWED JOINTS.

DIMENSIONS SPANNING THE OPEN JOINT WILL DECREASE OR INCREASE FOR EVERY 10°F RISE OR FALL RESPECTIVELY.

1.74 INCHES AT PIER N1 S. BOUND

△1 TEMP ADJUSTMENT CHART

0°	10°	20°	30°	40°	50°	60°	70°	80°	90°	100°	110°	120°
3'-5 7/8"	3'-3 3/8"	3'-1 7/8"	3'-0 1/8"	2'-10 3/8"	2'-8 5/8"	2'-6 7/8"	2'-5 1/8"	2'-3 3/16"	2'-1 1/16"	1'-11 15/16"	1'-10 7/16"	1'-8 7/16"

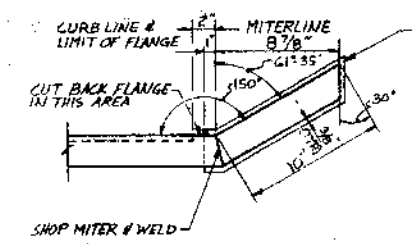

△3 UPTURN DETAIL
HIGH SIDE & LOW SIDE

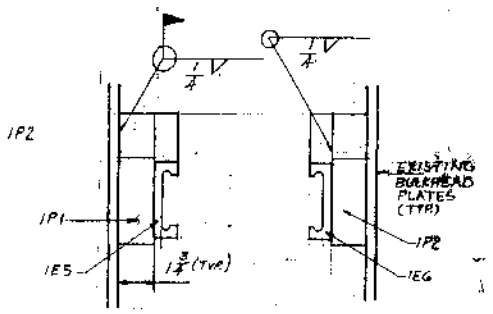

SECTION Z-Z

GENERAL JOB NOTES:

1. The contractor shall verify all dimensions prior to fabrication.
2. Fabrication and materials shall comply with the 1982 Louisiana Dept. of Transportation Standard Specifications for Roads and Bridges as amended by the contract special provisions.
3. Welding shall comform to the AWS Structural Welding Code D1.1-86 as modified by the AASHTO Standard Specifications for Welding of Structural Steel Highway Bridges (third edition-1981), and as modified by the contract special provisions.
4. All steel surfaces (except stainless steel surfaces and surfaces in contact with the concrete) shall be shop painted with two coats of Valspar MZ-4 Epoxy Zinc Rich Paint. The paint shall be spray applied to three mils D.F.T. per coat.
5. The neoprene seals shall be shop installed using the seal installation tools and prima lub adhesive. The prima lub adhesive shall be brush applied to the full perimeter on the walls of the steel extrusion.
6. The ends of the neoprene seals shall be capped using 1/32" neoprene sheeting. The sheeting shall be bonded in place using aron alpha adhesive.
7. The expansion dam shall be factory assembled and shipped with dimension "A" set at 2'-5¼.

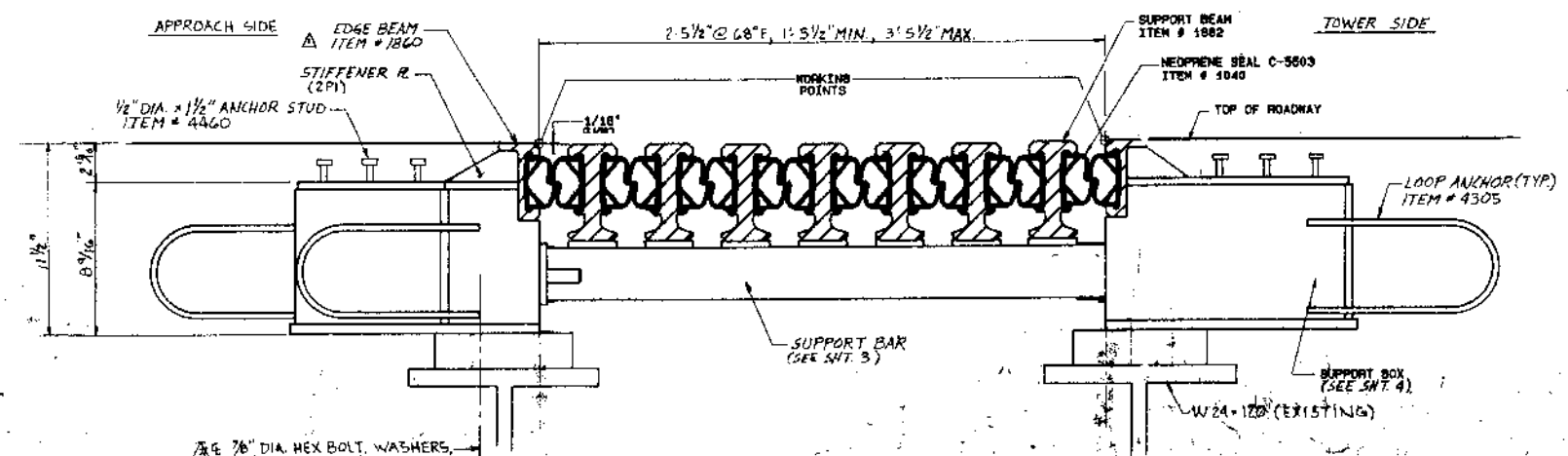

△6 7/8" DIA. HEX BOLT, WASHERS, AND NUTS ALONG WITH THE SHIMS SHALL BE SUPPLIED SOLELY BY THE CONTRACTOR (TYP) EACH SIDE OF THE EXPANSION DAM.

SECTION A-A
1/4"=1'

FOR INFORMATIONAL PURPOSES ONLY

SHEET LOCATION
ITEM CLASSIFICATION
ITEM NUMBER
2p3

MARKING SYSTEM

CONTRACTOR: PROFESSIONAL CONSTRUCTION SERVICES
STATE: LOUISIANA
ST. CHARLES PARISH
F.A.P. NO.: IR-310-4(130)
STATE PROJECT NO.: 450-37-0020
PRODUCT NO.: MOD19555AA
JOINT LOCATION: PIER N1 S. BOUND

NO.	REVISIONS	BY	DATE
4			
3	REVISED AS PER [illegible]	[illegible]	[illegible]
2	REVISED AS PER BAT	[illegible]	[illegible]
1	[illegible]	[illegible]	[illegible]

Huval & Associates, Inc.
Consulting Engineers
PROJECT: MISSISSIPPI RIVER BRIDGE AT LULING

DETAILED BY: [illegible]	DATE:	
CHECKED BY: [illegible]	DATE:	
SCALE:	DATE:	
DRAFTING:	DRAFTING:	

SHEET NUMBER 110

ST. CHARLES	450(309)	450-37-0020
PARISH	FEDERAL PROJECT	STATE PROJECT

MH	TB	12-17-02
UT	MH	N.T.S.
DESIGNED	DETAILED	DATE
CHECKED	CHECKED	SCALE

NO.	REVISION DESCRIPTION	DATE	BY

MISSISSIPPI RIVER BRIDGE (LULING)
DECK TEST SECTION
AND JOINT REPAIRS

VENDOR SUPPLIED SHOP DRAWINGS
E2 SOUTHBOUND (1989 REPAIR)

HUVAL
& ASSOCIATES, INC.
Consulting Engineers

X:\HUVAL Projects\354 Luling\FORE TWG\Revised 1-8-04\11102\Shop Drawing.dwg, Layout1 02/26/2004 11:03:00 AM

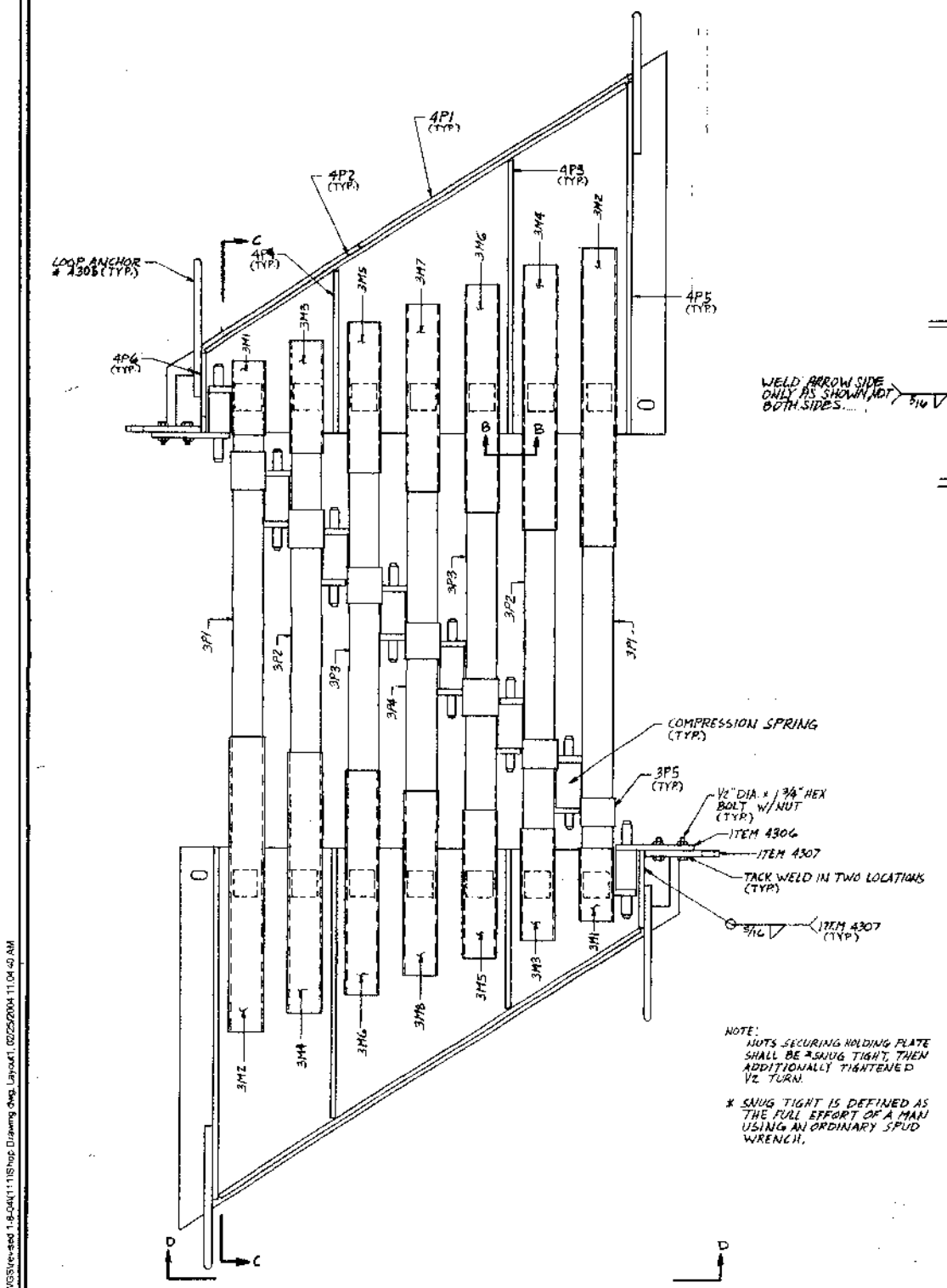

PLAN VIEW

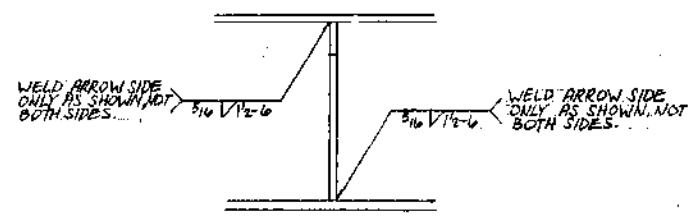

VIEW B-B

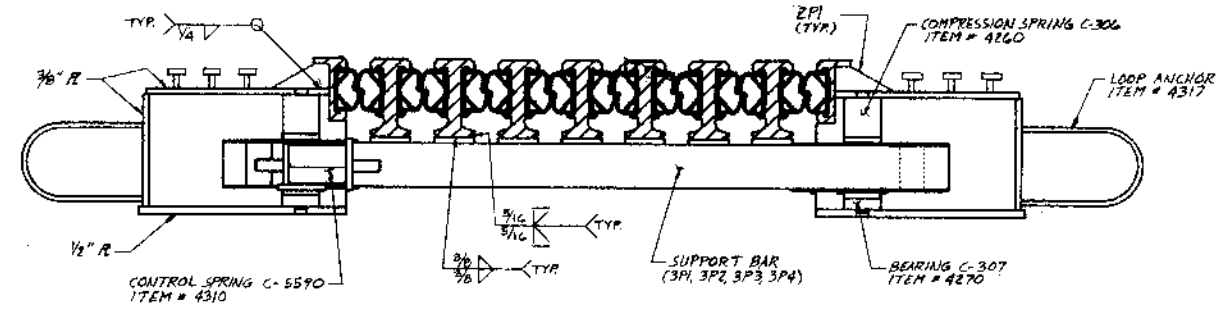

SECTION C-C

NOTE: FOR INFORMATION NOT SHOWN SEE SECTION A-A SHT. 1.

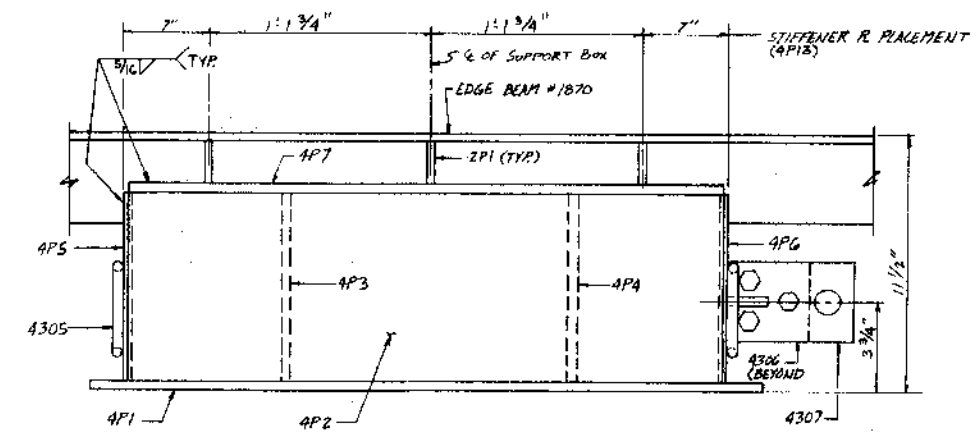

VIEW D-D

(STUDS ARE NOT SHOWN)

FOR INFORMATIONAL PURPOSES ONLY

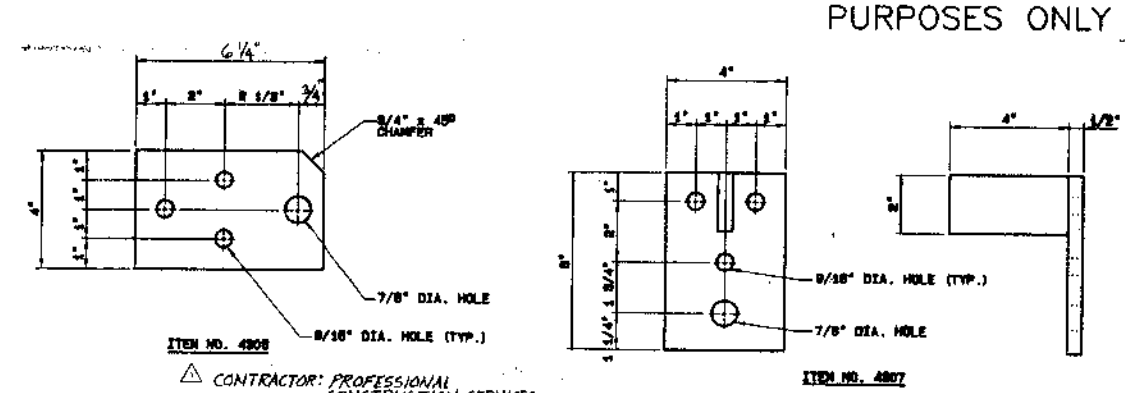

HOLDING PLATE DETAILS

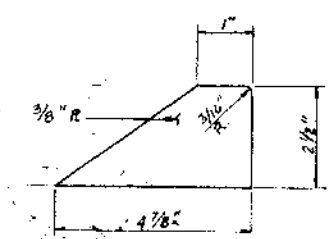

STIFFENER PLATE DETAIL - 2P1

△ CONTRACTOR: PROFESSIONAL CONSTRUCTION SERVICES
STATE: LOUISIANA
ST. CHARLES PARISH
F.A.P. NO.: IR-310-4(130)
STATE PROJECT NO.: 450-37-12
PRODUCT NO.: MOD(9)55EAA
JOINT LOCATION: PIER N1 S. BOUND

NO.	DESCRIPTION	NAME	DATE
4			
3			
2			
△	REVISED AS PER D.O.T.	JMJ	7-25-89

REVISIONS

Watson Bowman Acme

Pittsford-Drive Amherst, N.Y. 14228 · TEL. (716) 691-7900 · FAX (716) 691-6090

PROJECT: MISSISSIPPI RIVER BRIDGE AT LULING

TITLE: NABO PLANO MOTOR EXP. JT. DETAILS

DETAILED BY: JMJ	DATE: 7-25-89
CHECKED BY: R.K.	DATE: 7-28-89
SCALE: NTS	WBA JOB NO.: 17555
SHEET NO.: 2 of 2	DRAWING NO.: A-7186A

SHEET NUMBER 111

ST. CHARLES | 450(509) | 450-37-0020

PARISH | FEDERAL PROJECT | STATE PROJECT

MH DT | TB MH | 12-11-02 NTS

DESIGNED CHECKED | DETAILED CHECKED | DATE SCALE

REVISION DESCRIPTION | BY | DATE | NO.

MISSISSIPPI RIVER BRIDGE (LULING)
DECK TEST SECTION AND JOINT REPAIRS

VENDOR SUPPLIED SHOP DRAWINGS
E2 SOUTHBOUND (1989 REPAIR)

HUVAL & ASSOCIATES, INC.
Consulting Engineers

X:\HUVAL Projects\3154 (Luling)\CORE DWGS\revised 1-8-04\111\Shop Drawing (Dwg. Layout1, 02/25/2004 11:04:40 AM

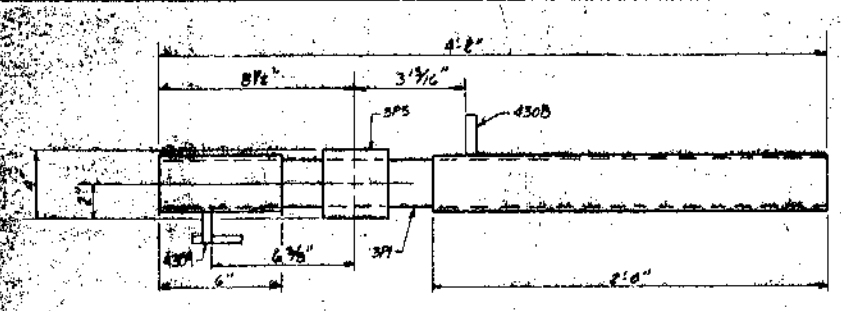

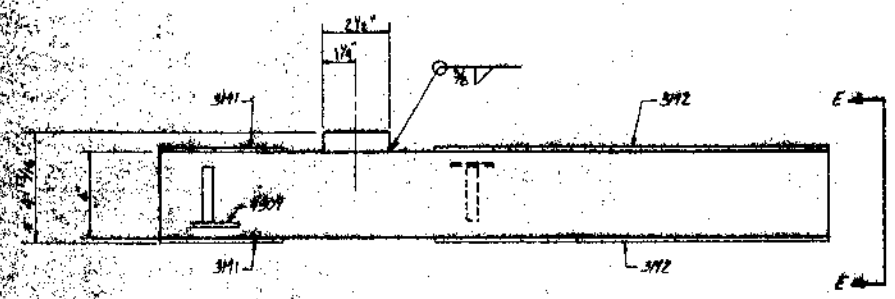

EXTERIOR SUPPORT BAR DETAIL - 3P1

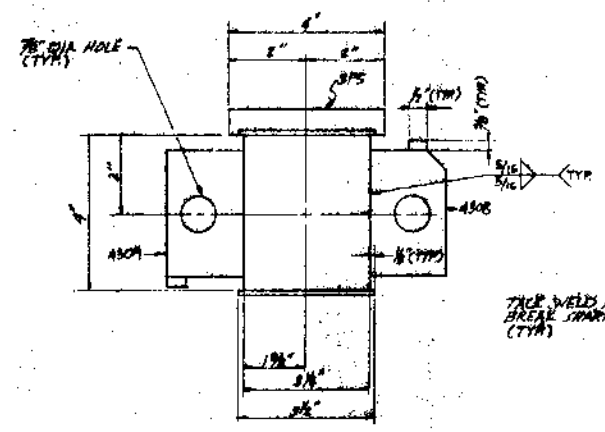

VIEW E-E

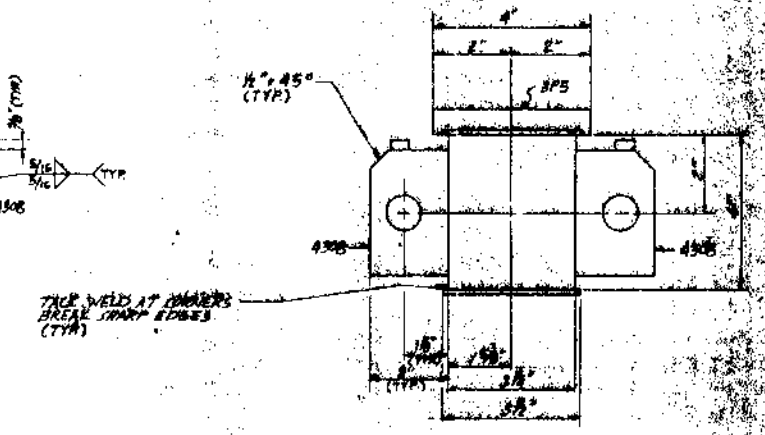

VIEW F-F

* FABRICATOR NOTE:
HOLDING OF THIS DIMENSION IS CRITICAL
ADDITIONAL TOLERANCE BUILD UP SHALL
BE DEALT WITH BY SHAVING INCREMENTS
OFF PLATE 3P5.

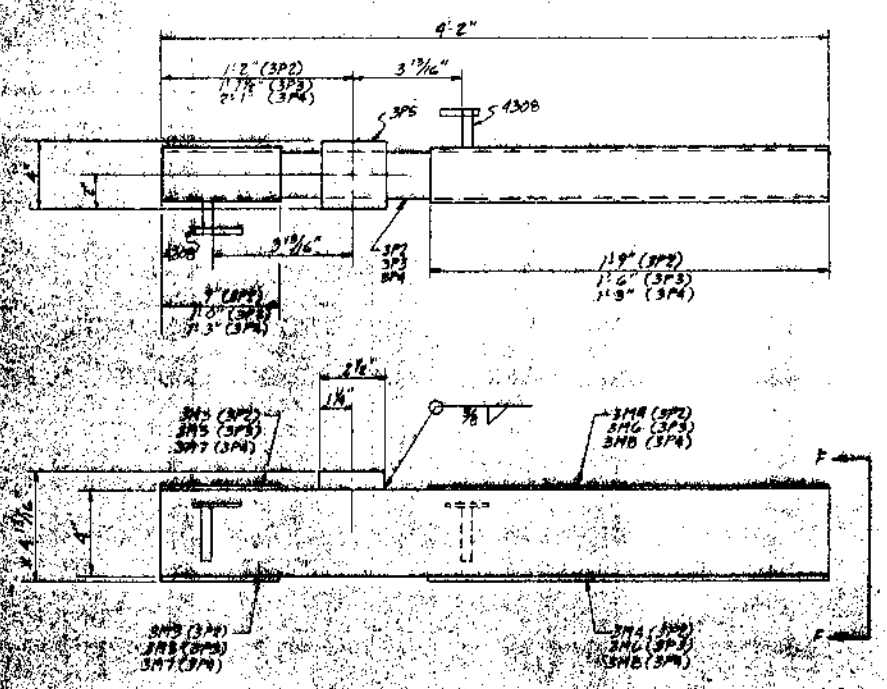

INTERIOR SUPPORT BAR DETAILS 3P2, 3P3 & 3P4

FOR INFORMATIONAL PURPOSES ONLY

4.			
3.			
2.			
1.	[redacted]		

SHEET NUMBER 112

ST. CHARLES | 4503(509) | 450-37-0020

PARISH | FEDERAL PROJECT | STATE PROJECT

DESIGNED MFI | CHECKED ST | DETAILED TB | CHECKED MJK | DATE 12-11-02 | SCALE N.T.S. | BY

DATE | NO. | REVISION DESCRIPTION

MISSISSIPPI RIVER BRIDGE (LULING)
DECK TEST SECTION
AND JOINT REPAIRS

VENDOR SUPPLIED SHOP DRAWINGS
E2 SOUTHBOUND (1989 REPAIR)

HUVAL & ASSOCIATES, INC.
Consulting Engineers

X:\HUVAL Projects\1504 (Luling)\CTRE DWGS\revised 1-8-04\112 Shop Drawing.dwg, Layout1, 12/5/2004 12:47:55 PM

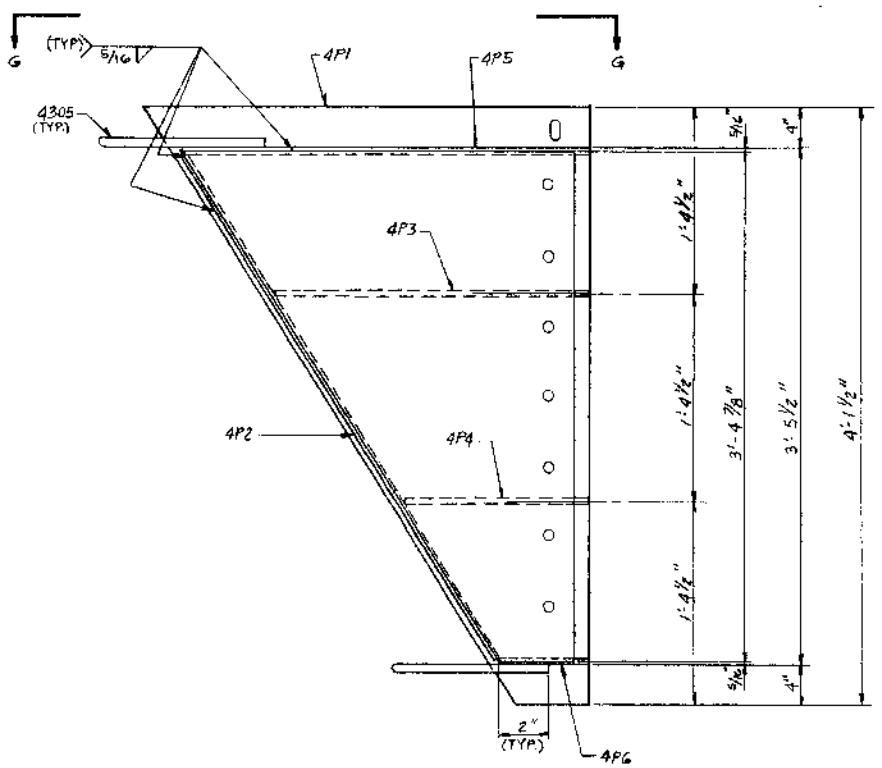

SUPPORT BOX PLAN

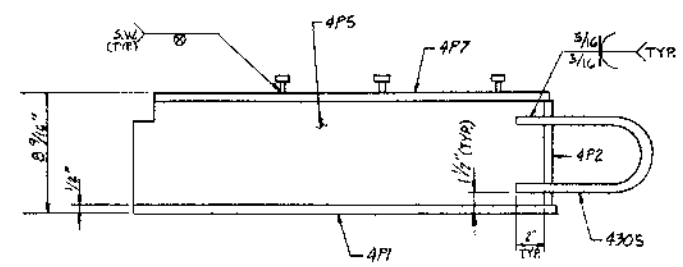

VIEW G-G

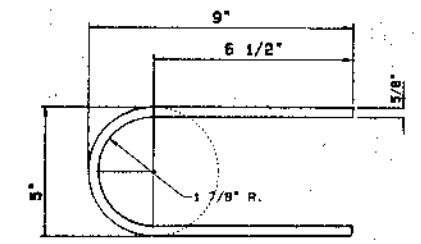

LOOP ANCHOR DETAIL

ITEM NO. 4305

FOR INFORMATIONAL PURPOSES ONLY

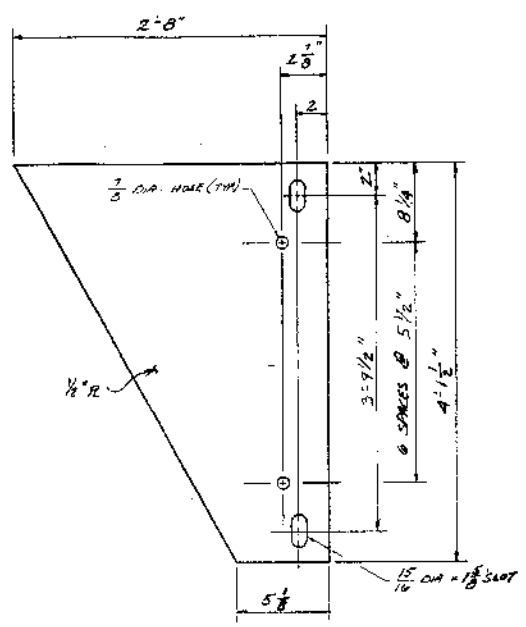

BASE PLATE DETAIL - 4P1

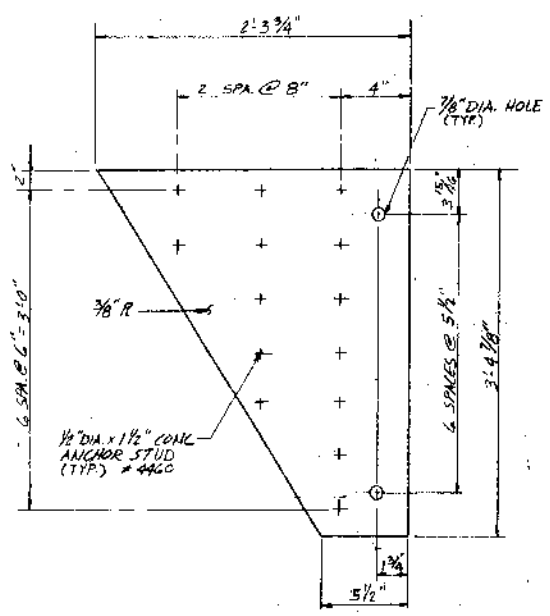

TOP PLATE DETAIL - 4P2

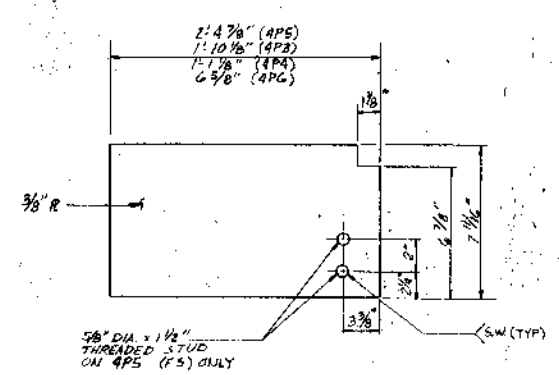

SIDE PLATE DETAILS - 4P3, 4P4, 4P5, 4P6

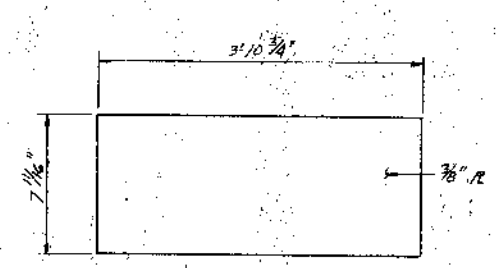

BACK PLATE DETAIL - 4P2

⚠ CONTRACTOR: PROFESSIONAL CONSTRUCTION SERVICES
STATE: LOUISIANA
ST. CHARLES PARISH
F.A.P. NO.: IR-310-4(130)
STATE PROJECT NO.: 450-37-12
PRODUCT NO.: MOD19555AA
JOINT LOCATION: PIER M S. BOUND

NO.	DESCRIPTION	NAME	DATE
4			
3			
2			
1	REVISED AS PER D.O.T.	JMJ	7/6

REVISIONS

Watson Hanman Acuna
89 Fairview Drive Amherst, N.Y. 14120 TEL. (716) 691-7986 FAX (716) 691-0008

PROJECT: MISSISSIPPI RIVER BRIDGE AT LULING
TITLE: WABD, D-2400 MODULAR EXP. JT. SUPPORTS

DETAILED BY: JMJ	DATE: 7-28-89
CHECKED BY: R.K.	DATE: 7-28-89
SCALE: NTS	WBA JOB NO.: 19082
SHEET NO.:	DRAWING NO.: M-7186

SHEET NUMBER 113

ST. CHARLES	450X(509)	450-37-0020
PARISH	FEDERAL PROJECT	STATE PROJECT
MH / DT	TB / MH	12-11-02 / N.T.S.
DESIGNED / CHECKED	DETAILED / CHECKED	DATE / SCALE

NO.	DATE	REVISION DESCRIPTION	BY

MISSISSIPPI RIVER BRIDGE (LULING)
DECK TEST SECTION AND JOINT REPAIRS

VENDOR SUPPLIED SHOP DRAWINGS
E2 SOUTHBOUND (1989 REPAIR)

HUVAL & ASSOCIATES, INC.
Consulting Engineers

X:\HUVAL-Projects\3154-Luling\MORE DWGS\revised 1-8-04\1136\Shop Drawing.dwg, Layout1, 02/26/2004 11:22:04 AM

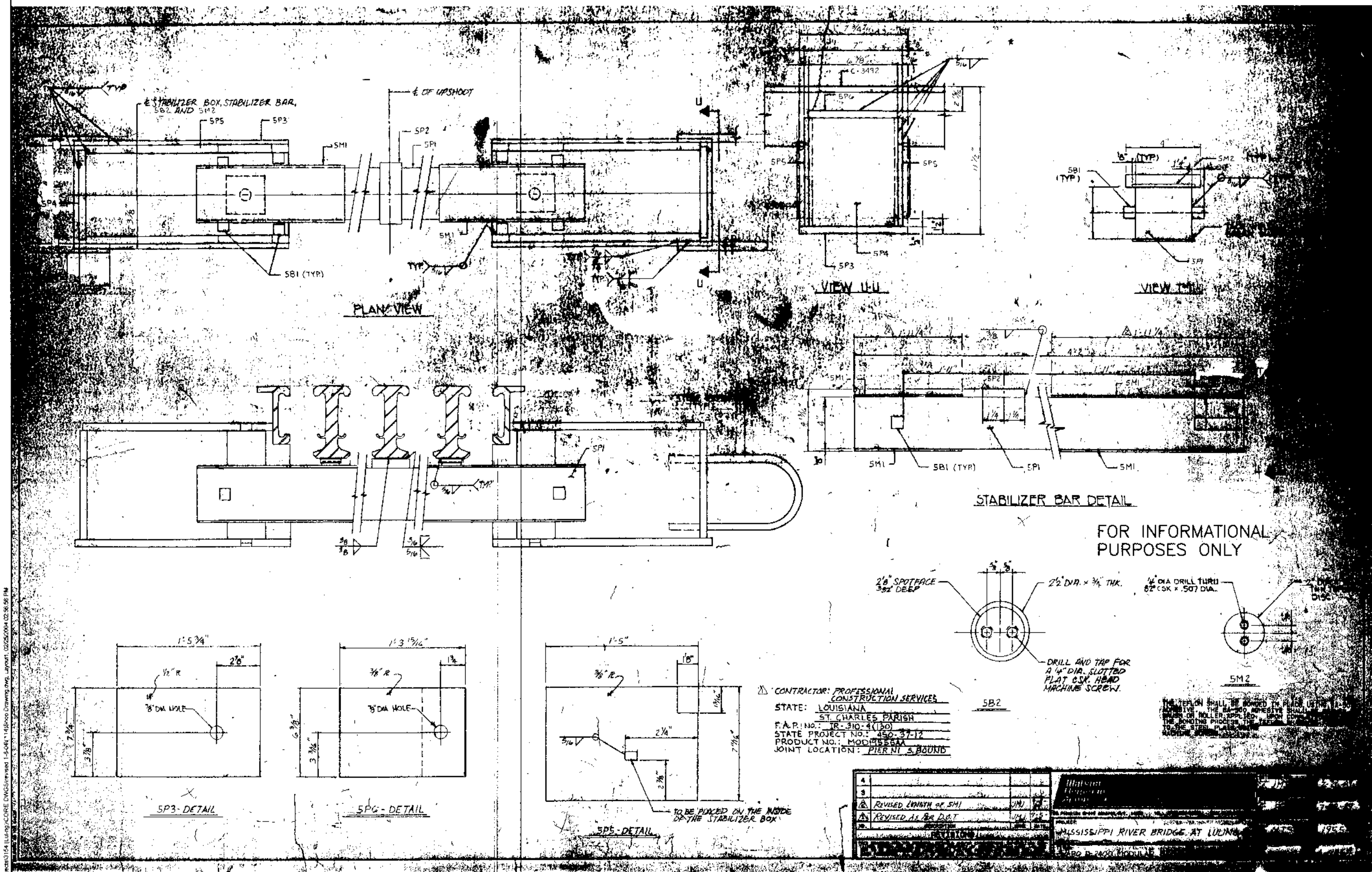
PLAN VIEW
℄ STABILIZER BOX, STABILIZER BAR, SB2 AND SM2
℄ OF UPSHOOT
SP5
SP3
SM1
SP2
SP1
SP4
SB1 (TYP)
VIEW U-U
VIEW T-T
STABILIZER BAR DETAIL
FOR INFORMATIONAL PURPOSES ONLY
SP3 - DETAIL
SP6 - DETAIL
SP5 - DETAIL
TO BE PLACED ON THE INSIDE OF THE STABILIZER BOX
SB2
SM2
DRILL AND TAP FOR A 1/4" DIA. SLOTTED FLAT CSK. HEAD MACHINE SCREW.
2 1/2" DIA. x 3/4" THK.
2 1/8" SPOTFACE 3/32" DEEP
1/4" DIA DRILL THRU 82° CSK x .507 DIA.
CONTRACTOR: PROFESSIONAL CONSTRUCTION SERVICES
STATE: LOUISIANA
ST. CHARLES PARISH
F.A.P. NO.: TR-310-4(130)
STATE PROJECT NO.: 450-37-12
PRODUCT NO.: MODIBSSAA
JOINT LOCATION: PIER N1 S.BOUND
REVISED LENGTH OF SM1
REVISED AS PER DOT
MISSISSIPPI RIVER BRIDGE AT LULING
PRO B-2400 MODULAR
SHEET NUMBER 114
ST. CHARLES
4503(509)
450-37-0020
PARISH
FEDERAL PROJECT
STATE PROJECT
MISSISSIPPI RIVER BRIDGE (LULING)
DECK TEST SECTION
AND JOINT REPAIRS
VENDOR SUPPLIED SHOP DRAWINGS
E2 SOUTHBOUND (1989 REPAIR)
HUVAL & ASSOCIATES, INC.
Consulting Engineers

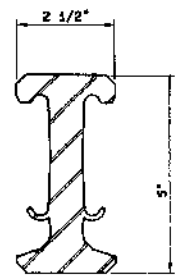

SUPPORT BEAM

ITEM NO. 1862

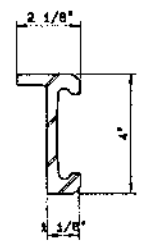

EDGE BEAM

C-3492

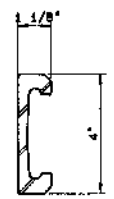

EDGE BEAM

C-3491

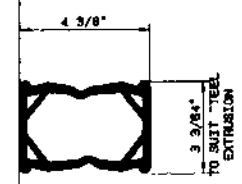

NEOPRENE LOCKING SEAL

C-5603

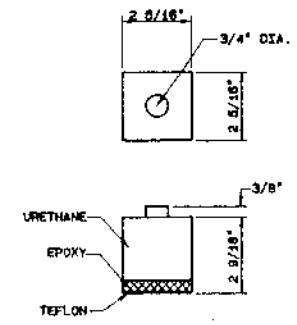

COMPRESSION SPRING

C-306

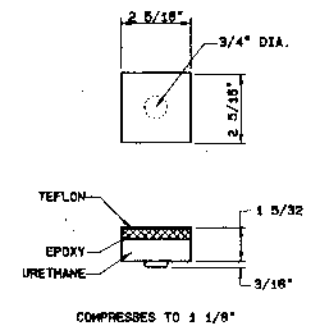

BEARING

C-307

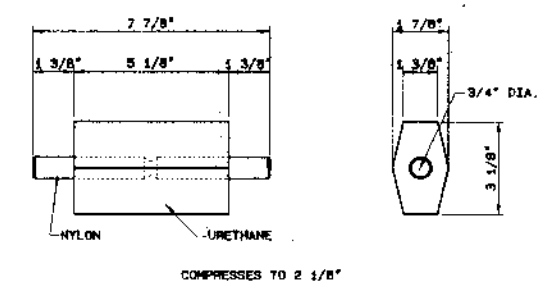

CONTROL SPRING

C-5590

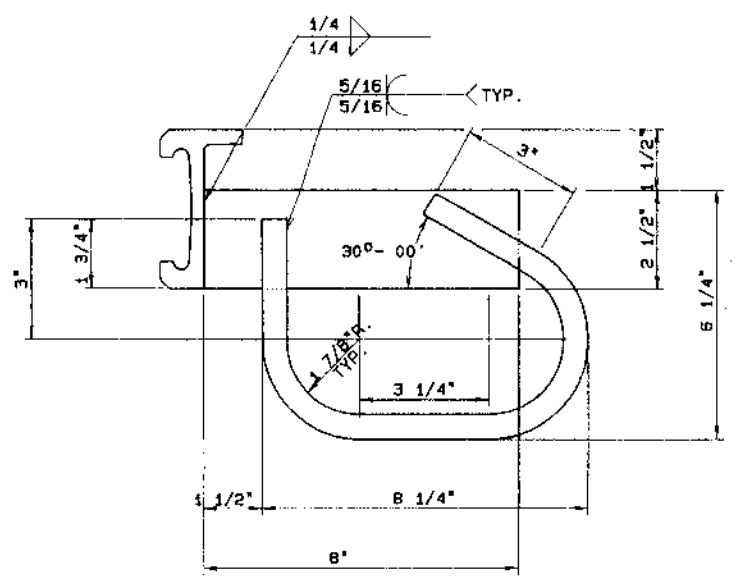

ANCHOR ASSEMBLY DETAIL

ITEM NO. 4351

NTS

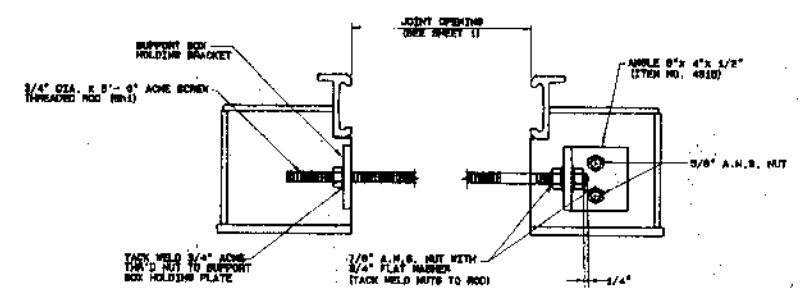

PRESTRESS DEVICE ASSEMBLY

NOTE:
1. PRESTRESS DEVICES SHALL BE LOCATED AT EVERY SUPPORT BOX.
2. THE PRESTRESS DEVICE IS THE PROPERTY OF THE MANUFACTURER, AND IS TO BE RETURNED TO SUCH UPON COMPLETION OF INSTALLATION.
3. PRESTRESS DEVICES SHALL BE SHOP INSTALLED.
4. MANUFACTURER SHALL OIL ACME THREADED ROD TO PREVENT CORROSION AND STAINING OF PAINTED EXPANSION JOINT SYSTEM.

FOR INFORMATIONAL PURPOSES ONLY

⚠ CONTRACTOR: PROFESSIONAL CONSTRUCTION SERVICES
STATE: LOUISIANA
ST. CHARLES PARISH
F.A.P. NO.: IR-310-4(130)
STATE PROJECT NO.: 450-37-12
PRODUCT NO.: MOD19555AA
JOINT LOCATION: PIER N1 S.BOUND

NO.	DESCRIPTION	NAME	DATE
4			
3			
2			
1	REVISED AS PER D.O.T.	JMJ	9-5-89

REVISIONS

THIS DRAWING AND THE DESIGNS, DETAILS AND/OR ENGINEERING INFORMATION CONTAINED HEREIN ARE THE PROPRIETARY PROPERTY OF WATSON BOWMAN ACME AND ARE TO BE USED SOLELY FOR THE PURPOSE FOR WHICH THEY HAVE BEEN FURNISHED. ALL RIGHTS OF DESIGN AND INVENTION ARE HEREBY RESERVED.

Watson Bowman Acme
85 Pineview Drive Amherst, N.Y. 14228 TEL. (716) 691-7900 FAX (716) 691-9280

DETAILED BY: JMJ	DATE: 7-26-89
CHECKED BY: R.K.	DATE: 7-28-89
SCALE: NONE	WBA JOB NO.: 19555
SHEET NO.: 6 OF 7	DRAWING NO.: A-11864

PROJECT: MISSISSIPPI RIVER BRIDGE AT LULING

TITLE: WABO D-2400 MODULAR EXP. JT. DETAILS

SHEET NUMBER 115

ST. CHARLES | PARISH | 450-37-0020 | STATE PROJECT | 450(509) | FEDERAL PROJECT

DESIGNED MH | CHECKED DT | DETAILED TB | CHECKED MH | DATE 12-11-02 | SCALE N.T.S. | BY

REVISION DESCRIPTION | DATE | NO.

MISSISSIPPI RIVER BRIDGE (LULING)
DECK TEST SECTION
AND JOINT REPAIRS

VENDOR SUPPLIED SHOP DRAWINGS
E2 SOUTHBOUND (1989 REPAIR)

HUVAL & ASSOCIATES, INC.
Consulting Engineers

X:\HUVAL Projects\1754 (Luling)\CORE DWGS\Revised 1-9-04\115\Shop Drawing.dwg Layout1 02/02/2004 12:35:42 PM

PARTS LIST

ITEM	MARK	DESCRIPTION	MATERIAL	QUANTITY
1880	1E1-1E2	EDGE BEAM (EA) (DOMESTIC) C-3492	A-588	80 LF
1840	1E3, 1E6	EDGE BEAM (EC) (DOMESTIC) C-3491	A-588	4 LF
1882	1E3, 1E4	SUPPORT BEAM (DOMESTIC) C-11459	A-588	264 LF
1040	3N1	NEOPRENE SEAL C-5803	NEOPRENE	8 AT 42 LF
6300		1/32" X 36" NEOPRENE SHEETING	NEOPRENE	1.75 LF
4260		COMPRESSION SPRING C-306	URETHANE	102 PCS
4270		BEARING C-307	URETHANE	102 PCS
4310		CONTROL SPRING C-5590	URETHANE	58 PCS
4308		BOX LOOP ANCHOR		35 PCS
4351		LOOP ANCHOR ASSEMBLY	A-588	12 PCS
	2P1	PLATE - 3/8" X 2 1/2" X 4 7/8"	A-588	42 PCS
4308		MOLDING PLATE	A-588	14 PCS
4307		MOLDING PLATE ASSEMBLY	A-588	14 PCS.
4950		1/2" DIA. X 1 3/4" A.N.S. HEX BOLT	A-325	42 PCS
7920		1/2" DIA. A.N.S. HEX NUT	A-325 CP	42 PCS
	3P1	PLATE - 3 1/4" X 4" 4'-2"	A-588	14 PCS
4308		MOD. COMP. STOP BAR IN C-8272	A-588	14 PCS
4309		MOD. COMP. STOP BAR OUT C-8273	A-588	14 PCS
	3M1	12 GA. - 3 1/2" X 6"	STAINLESS STEEL TYPE 304, 2B FINISH	28 PCS
	3M2	12 GA. - 3 1/2" X 2'-0"	STAINLESS STEEL TYPE 304, 2B FINISH	28 PCS
	3P5	PLATE - 3/4" X 2 1/2" X 4"	A-588	14 PCS
	3P2	PLATE - 3 1/4" X 4" X 4'-2"	A-588	14 PCS
4308		MOD. COMP. STOP BAR IN C-8272	A-588	28 PCS
	3M3	12 GA. - 3 1/2" X 9"	STAINLESS STEEL TYPE 304, 2B FINISH	28 PCS
	3M4	12 GA. - 3 1/2" X 1'-9"	STAINLESS STEEL TYPE 304, 2B FINISH	28 PCS
	3P5	PLATE - 3/4" X 2 1/2" X 4"	A-588	14 PCS
	3P3	PLATE - 3 1/4" X 4" X 4'-2"	A-588	14 PCS
	3M5	12 GA. - 3 1/2" X 1'-0"	STAINLESS STEEL TYPE 304, 2B FINISH	28 PCS
	3M6	12 GA. - 3 1/2" X 1'-6"	STAINLESS STEEL TYPE 304, 2B FINISH	28 PCS
	3P5	PLATE - 3/4" X 2 1/2" X 4"	A-588	14 PCS
4308		MOD. COMP. STOP BAR IN C-8272	A-588	28 PCS
	3P4	PLATE - 3 1/4" X 4" X 4'-2"	A-588	7 PCS
	3M8	12 GA. - 3 1/2" X 1'-3"	STAINLESS STEEL TYPE 304, 2B FINISH	28 PCS
4308		MOD. COMP. STOP BAR IN C-8272	A-588	14 PCS
	3P5	PLATE - 3/4" X 2 1/2" X 4"	A-588	7 PCS
	4P1	PLATE - 1/2" X 2'-8" X 4'-1 1/2"	A-588	14 PCS
	4P2	PLATE - 3/8" X 7 11/16" X 3'-10 3/4"	A-588	14 PCS
	4P3	PLATE - 3/8" X 7 11/16" X 1'-10 1/8"	A-588	14 PCS
	4P4	PLATE - 3/8" X 7 11/16" X 1'-1 1/8"	A-588	14 PCS
	4P5	PLATE - 3/8" X 7 11/16" X 2'-4 7/8"	A-588	14 PCS
	4P6	PLATE - 3/8" X 7 11/16" X 6 5/8"	A-588	14 PCS
	4P7	PLATE - 3/8" X 2'-3 3/4" X 3'-4 7/8"	A-588	14 PCS
7010		5/8" DIA. X 1 1/2" THREADED STUD	A-108 NP	28 PCS
4460		1/2" DIA. X 1 5/8" CONC. ANCHOR STUD	A-108 NP	196 PCS
	5P1	PLATE - 3 1/4" X 4" X 4'-2"	A-588	2 PCS
	5P2	PLATE - 3/4" X 2 1/2" X 4"	A-588	2 PCS
	5B1	BAR - 3/4" X 3/4" X 1 1/4"	A-588	16 PCS
	5M1	12 GA. - 3 1/2" X 1'-11 1/4"	STAINLESS STEEL TYPE 304, 2B FINISH	8 PCS
	5M2	2" DIA. X 3/16" THICK TEFLON DISC		12 PCS
	5B2	BAR - 3/4" X 2 1/2" DIA.	ASTRALLOY	12 PCS
	5P3	PLATE - 1/2" X 7 3/4" X 1'-5 3/4"	A-588	4 PCS
	5P4	PLATE - 3/8" X 7 11/16" X 6 3/8"	A-588	4 PCS
	5P5	PLATE - 3/8" X 7 11/16" X 1'-8"	A-588	8 PCS
	5P6	PLATE - 3/8" X 6 3/8" X 1'-3 15/16"	A-588	4 PCS
4315		MOD. COMP. PRESTRESS 6-8262-2	A-36	7 PCS
7880		5/8" DIA. A.N.S. HEX NUT	GR. 5 CP	14 PCS
7580		3/4" DIA. A.N.S. TYPE A PLAIN WASHER	F436	90 PCS
8080		7/8" DIA. A.N.S. HEX NUT	A-325 CP	14 PCS
8081		3/4" DIA. ACME THREADED HEX NUT		7 PCS
7151	6H1	3/4" DIA. X 5'-0" ACME SCREW THD. ROD		7 PCS
	7P1	PLATE - 3/8" X 8" X 2'-8 3/4"	A-36	16 PCS
5301		3/4" DIA. X 2 1/2" A.N.S. HEX BOLT	A-307 NP	16 PCS
8010		3/4" DIA. A.N.S. HEX NUT	A-307 NP	16 PCS
3155	7C1	WC 18 X 42.7 X 2'-9 3/4"	A-588	2 PCS
		1/4" DIA. X 1/2" SLOTTED FLAT HEAD MACHINE SCREW	CP	24 PCS
		BA-500 ADHESIVE PART A		1-16 OZ. BTL.
		BA-500 ADHESIVE PART B		1-16 OZ. BTL.
		VALSPAR WZ-4 EPOXY KING RICH PAINT		10 GAL.
	1P1	R 1 3/4" x 10" x 10"	A-588	2 PCS. △1
	1P2	R 1 3/4" x 10" x 10"	A-588	2 PCS. △1

THIS MATERIALS LIST INCLUDES INFORMATION FOR 1 JOINT.

PAY LENGTH: 1 @ 40.26' △1

SHIPPING LENGTH: 40.26' +/- △1

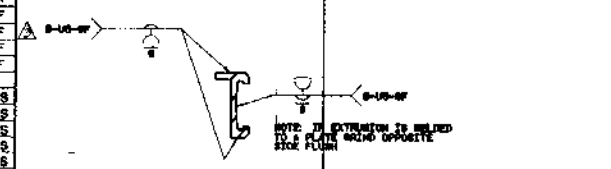

SHOP WELD

C-3492

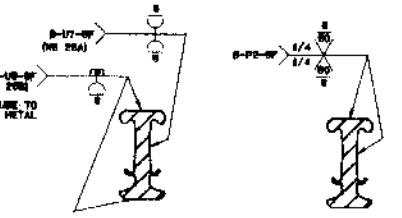

SHOP WELD

SHOP WELD

(LIKE SPLICE)

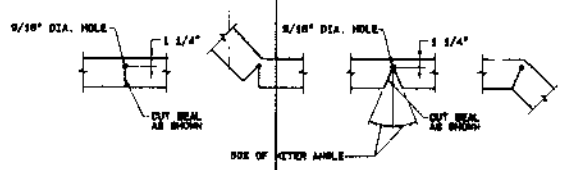

SEAL TREATMENTS

NTS

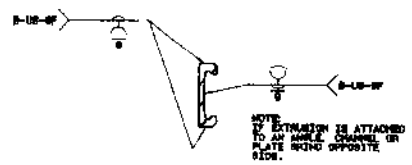

SHOP WELD

C-3491

PROCEDURE FOR END CAPPING NEOPRENE SEAL

1. Clean seal ends and Neoprene cap with a suitable solvent cleaner such as toluene.
2. Apply adhesive to lap flap of end cap, place flap on top of seal so that it is in full contact and follows the shape of the seal. Hold it in place approx. one minute until the adhesive has set.
3. Repeat Step 2 for bonding both side flaps.

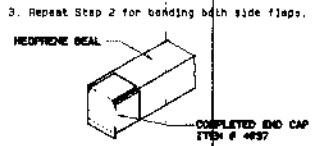

4. CAUTION.... No adhesive should be applied to the end of the Compression Seal. The bottom of the cap must remain open to facilitate "breathing" of the seal.

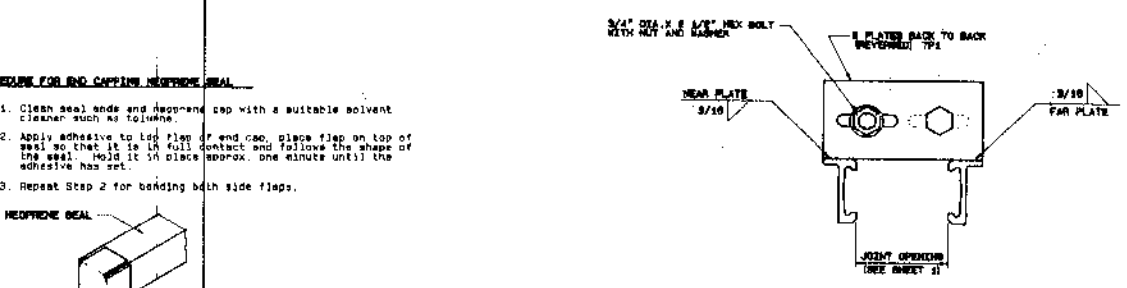

SHIPPING CLAMP ASSEMBLY

NOTE:

1. SHIPPING CLAMPS SHALL BE SPACED DIRECTLY BETWEEN SUPPORT BOXES, NOT LESS THAN 6" FROM FACE OF EXTRUSION AND PARALLEL WITH THE CENTERLINE OF SUPPORT BOX.
2. EACH SHIPPING CLAMP ASSEMBLY SHALL INCLUDE:
   (8) PLATE 3/8" x 8" x 2'-8 3/4"
   (2) 3/4" DIA. x 6 1/2" HEX BOLT
   (8) 3/4" STD. HEX NUT
   (2) 3/4" STD. WASHER
3. CONTRACTOR TO REMOVE SHIPPING CLAMPS WHEN JOINT IS SET AND WELD WELDS SMOOTH.

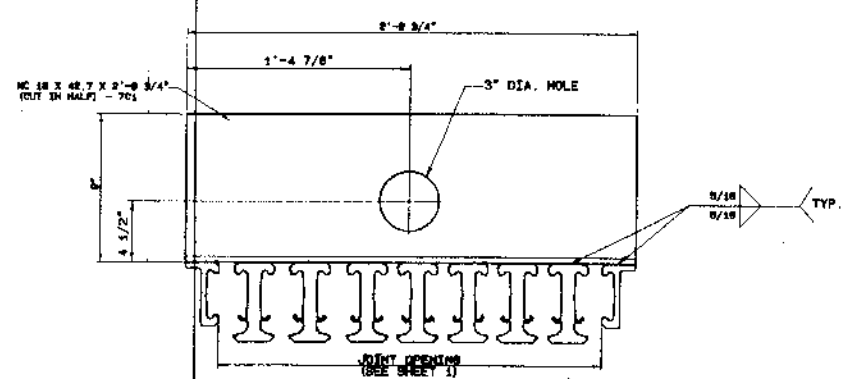

LIFTING DEVICE ASSEMBLY

NTS

△1 NOTE: PLACE LIFTING DEVICES 2'-0" @ 12'-0" FROM MIDLINES

MATERIAL SPECIFICATION

STEEL EXTRUSIONS - All extrusions are made of ASTM A-588 grade steel. All extrusions have grooves which grip the neoprene locking seal.

NEOPRENE LOCKING SEAL (C-5803) - The neoprene locking seal is bonded to the steel extrusions with Prime-Lub Adhesive. The neoprene seal is designed to absorb all joint movements. The physical properties of the locking seal are as follows:

PHYSICAL PROPERTIES	PROCEDURE	REQUIREMENT
Tensile Strength	(D-412)	2600 PSI
Elongation at Break	(D-412)	250%
Hardness, Type A Durometer	(D-2240)	80 +/- 7
Compression Set 70 hour at 212°F (B)	(D-395) Method B Mod.	40%
Oven Aging, 70 hour at 212°F	(D-573)	
Tensile Strength, loss, max.		20%
Elongation, loss, max.		25%
Hardness, Type A Durometer (points change)		0 to +10
Oil Swell, ASTM #3, 70 hour at 212°F, weight change max		+5%
Ozone Resistance, 20% strain, 100 pphm in air at 104°F	(D-1149)	No Cracks

Adhere with toluene to remove surface contamination.

COMPRESSION SPRING C-306 - The compression spring is composed of urethane, epoxy and 3/64" thick teflon sheet. The compression spring sits on top of the support bar. The physical properties of the spring meet Specifications of Minimum@Hilt as follows:

Shore Durometer	(ASTM D-2240)	90A
Elongation at Break	(ASTM D-412)	425%
Tensile Strength	(ASTM D-412)	5500 PSI
100% Modulus	(ASTM D-412)	1300 PSI
300% Modulus	(ASTM D-412)	2400 PSI
Tear Strength	(ASTM D-624)	130 PLI
Rebound Resilience	(ASTM D-2632)	48%

BEARING C-307 - The bearing is composed of urethane, epoxy and 3/64" thick teflon sheet, on which the support bar sitses on. The physical properties of the bearing meet the Specifications of Minimum@Hilt as follows:

Shore Durometer	(ASTM D-2240)	90A
Elongation at Break	(ASTM D-412)	425%
Tensile Strength	(ASTM D-412)	5500 PSI
100% Modulus	(ASTM D-412)	1300 PSI
300% Modulus	(ASTM D-412)	2400 PSI
Tear Strength	(ASTM D-624)	130 PLI
Rebound Resilience	(ASTM D-2632)	48%

CONTROL SPRING C-5590 - The control spring which is located between the support bars act to equalize the expansion of each bar. The control spring is made of cellular polyurethane foam which meets the Specifications of M-264.

STAINLESS STEEL SHEETING - Stainless steel is used on the sliding surface of the support bar. The stainless steel contact the teflon surface of the bearing and compression spring. The mechanical properties of the stainless steel are as follows:

Tensile Strength	92,700 PSI
Yield	51,700 PSI
Hardness	Rb 89
Bend Test	180 TXT
Elongation	58%

PRIMA-LUB ADHESIVE - Prime-Lub Adhesive is used to bond the neoprene locking seal to the steel extrusions. This adhesive shall be a polymeric mixture curing polyurethane and hydrocarbon solvent mixture with the following physical properties:

Average Weight per Gallon	8.5 lbs +/- 10%
Solids Content	72% Min.
Adhesive to remain workable	7 hrs @ 140°F
Film Strength	2000 PSI (Min.)
Elongation at room temperature	350% Min.
Flash Point (with slower cut)	over 200°F

ARON ALPHA ADHESIVE - Aron Alpha Adhesive is used in the shop to adhere a neoprene sheet and tap over the ends of the seals. The physical properties of the adhesive in a liquid state are as follows:

Appearance	Transparent Colorless Liquid
Refractive Index, n20°C/D	1.4548
Viscosity, at 25°C (Brookfield)	2-10cP
Specific Gravity, at 4°C	1.06
Boiling Point, at 25.5" mm Hg	149°C
Setting Point	48°C-78°F (59-82°C)
Flashing Point	176°F (about 80°C)
Solubility Parameter	10.1
Solubility	Soluble in acetone, methyl ethyl ketone, toluene, benzene, ethyl acetate, and nitromethane

The physical properties of the adhesive in a solid state are as follows:

Softening Temperature (Vicat method)	250°F (121°C)
Melting Point	330°F (165°C)
Specific Gravity, 25°/4°C	1.2480
Refractive Index, n20°C/D	1.4970
Electric Resistance	8.6 x 10 M @ 200°F (90°C)
Solubility	Soluble in acetone, dimethylformamide, and nitromethane

INSTALLATION PROCEDURE

STEP 1. Compare the dimensions of the blockout with the contract drawings.

STEP 2. Install prestress devices on expansion joint and loosen bolts at shipping clamps.

STEP 3. Preset the expansion joint opening using the ambient temperature and the temperature adjustment chart from the shop drawings. Discuss the final preset opening with the Engineer in charge. Retighten bolts at shipping clamps.

△1 STEP 4. Lift and then place expansion joint into blockout. While joint is suspended, install shims and hardware (supplied by CONTRACTOR) and adjust to proper grade and elevation.

STEP 5. Check joint for alignment with crown and curbs.

STEP 6. Complete all bolted connections to the superstructure. If necessary

STEP 7. Prior to placement of concrete, all prestress devices shall be removed. Devices on top of the joint may remain if their location will not interfere with concrete placement or expansion joint performance.

STEP 8. Temperature and joint opening should be checked for any discrepancies from initial adjustment

STEP 9. Contractor shall at this time have all required fo rework in place.

STEP 10. All concrete placement shall be in accordance with the specifications.

STEP 11. Upon completing concrete placement operations, the Engineer shall determine when removal of the jewsling devices will be permitted. If applicable contractor shall touch up all damaged painted areas.

STEP 12. Fill all bolt holes with styrofoam or other suitable material and install slider plates. (if applicable)

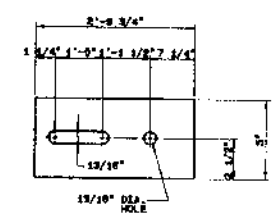

7P1 DETAIL

FOR INFORMATIONAL PURPOSES ONLY

△1 CONTRACTOR: PROFESSIONAL CONSTRUCTION SERVICES

STATE: LOUISIANA

ST. CHARLES PARISH

F.A.P. NO.: IR-310-4(130)

STATE PROJECT NO.: 450-37-12

PRODUCT NO.: MOD19555AA

JOINT LOCATION: PIER N1 S.BOUND

NO.	DESCRIPTION	NAME	DATE
4			
△1	REVISED AS PER MFGR.	JMJ	10-5-89
△2	REVISED LENGTH OF SMJ	JMJ	7-8-89
△3	REVISED AS PER D.O.T.	JMJ	9-5-89

REVISIONS

THE DRAWING AND THE DESIGN, DETAILS AND/OR PROPRIETARY INFORMATION CONTAINED HEREON ARE THE EXCLUSIVE PROPERTY OF WATSON BOWMAN ACME AND ARE NOT TO BE REPRODUCED OR USED EXCEPT FOR THE PURPOSE FOR WHICH THEY HAVE BEEN FURNISHED. ALL RIGHTS OF DESIGN AND INVENTION ARE HEREBY RESERVED.

Watson Bowman Acme
80 Pineview Drive Amherst, N.Y. 14228 TEL. (716) 691-7050 FAX (716) 691-9256

PROJECT: MISSISSIPPI RIVER BRIDGE AT LULING

TITLE: WABO D-2400 MODULAR EXP. JT. DETAILS

DETAILED BY: JMJ	DATE: 7-27-89
CHECKED BY: R.K.	DATE: 7-28-89
SCALE: NONE	WBA JOB NO.: 19555
SHEET NO.: 7 OF 7	DRAWING NO.: A-11864

SHEET NUMBER 116

ST. CHARLES | 450(309) | 450-37-0029

PARISH | FEDERAL PROJECT | STATE PROJECT

MP DT | TB MH | 12-11-92 N.T.S.

DESIGNED | CHECKED | DETAILED | CHECKED | DATE | SCALE

NO. | DATE | REVISION DESCRIPTION | BY

MISSISSIPPI RIVER BRIDGE (LULING)
DECK TEST SECTION AND JOINT REPAIRS

VENDOR SUPPLIED SHOP DRAWINGS E2 SOUTHBOUND (1989 REPAIR)

STATE OF LOUISIANA DEPARTMENT OF TRANSPORTATION AND DEVELOPMENT

HUVAL & ASSOCIATES, INC. Consulting Engineers

X:\HUVAL Projects\3154 Luling\CORE DWGS\Revised 1-8-04\ 1-16 Shop Drawing.dwg, Layout1, 02/25/2004 12:36:21 PM

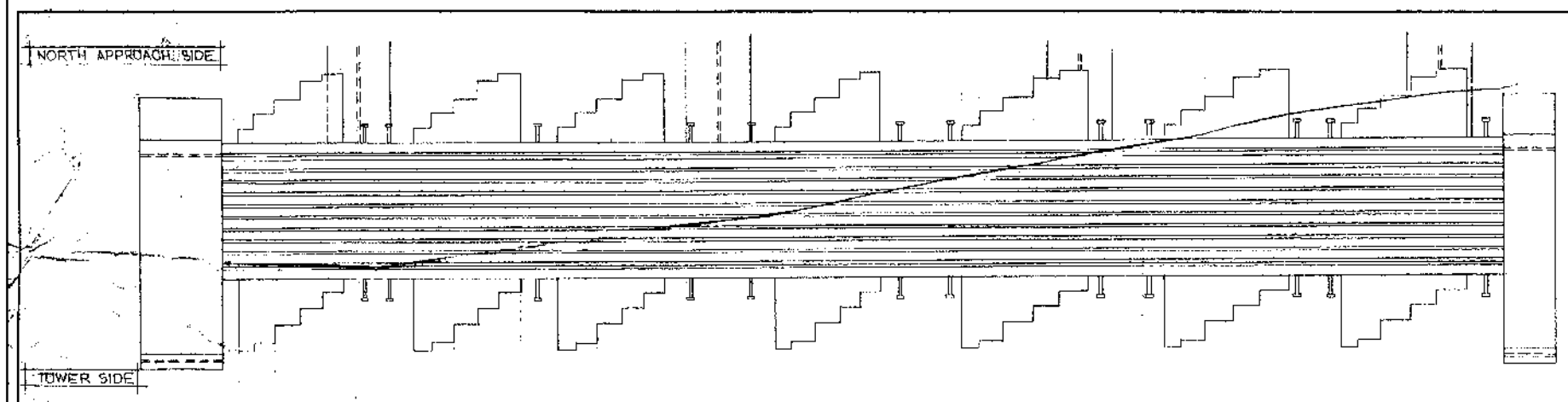

5/8" ANCHOR BARS ON BOXES NOT SHOWN IN PLAN

PLAN △
N.T.S.

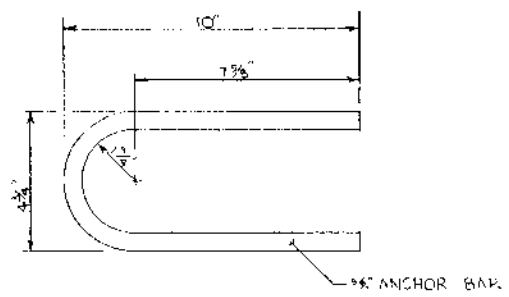

ANCHOR BAR DETAIL

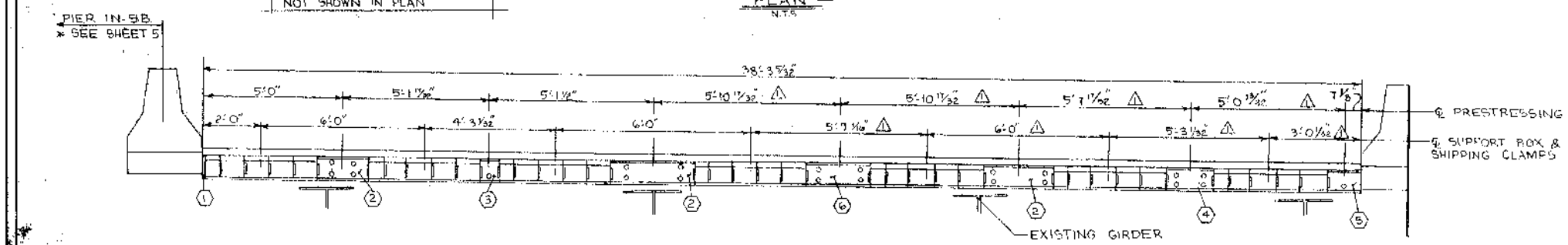

ELEVATION △
N.T.S.

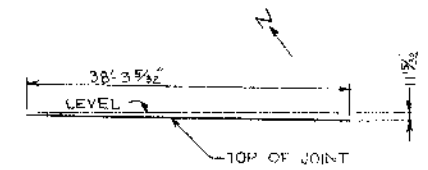

JOINT PROFILE
N.T.S.

⬡ DENOTES TYPE OF EDGE & BOTTOM ℞ BETWEEN BOXES, SEE DETAIL SHEET 7

FOR INFORMATIONAL PURPOSES ONLY

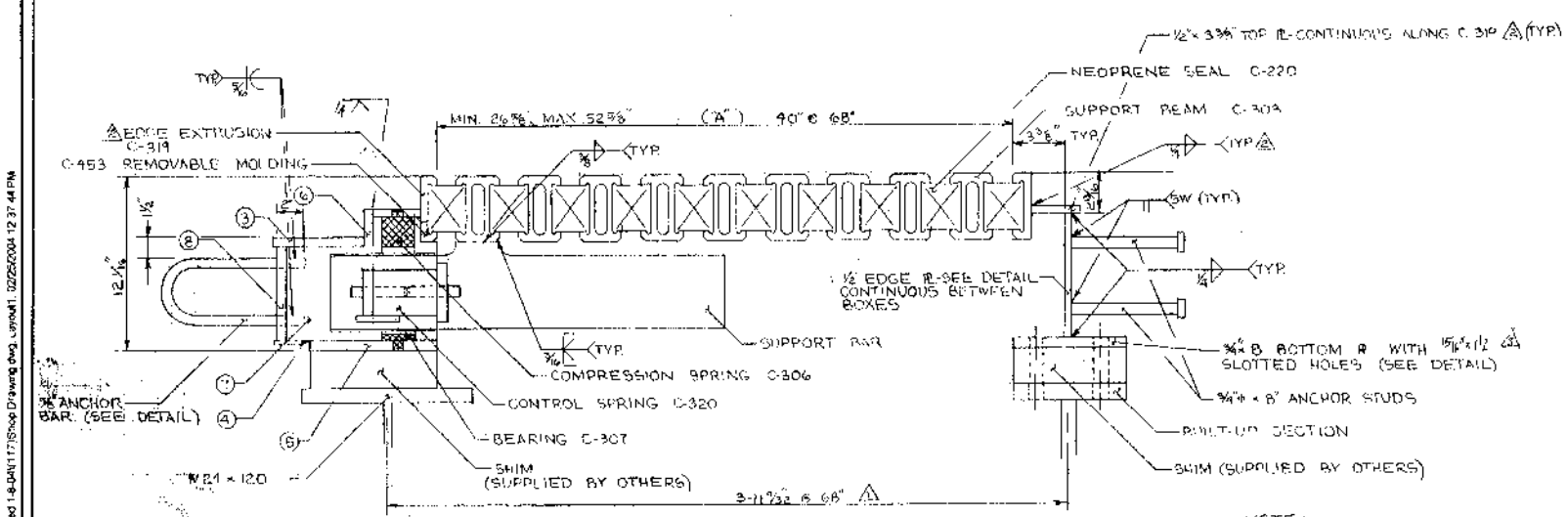

SECTION A-A
3/16" = 1"

NOTE:
THE DESIGN OF THE TEMPERATURE CHART IS BASED ON A SPAN LENGTH OF 223.8' AND A TEMPERATURE RANGE OF 20°F THROUGH 120°F.

TEMPERATURE CHART △

TEMP.	20°	30°	40°	50°	60°	68°	70°	80°	90°	100°	110°	120°
DIM. "A"	40 1/8	40 1/2	41 1/8	41 3/4	41 3/8	40"	39 5/8	39 1/4	38 7/8	34 1/2	32 1/8	30 7/8

INDEX

SHEET 1	PLAN, ELEVATION, TYPICAL SECTION
SHEET 2	TYPICAL BOX SECTION
SHEET 3	SUPPORT BOX DETAILS
SHEET 4	SUPPORT BAR DETAILS
SHEET 5	CURB ASSEMBLY, PIERS DETAILS
SHEET 6	CURB PLATE DETAILS
SHEET 6	CURB PLATE DETAILS, EDGE, BOTTOM PLATE DETAILS
SHEET 8	PRESTRESSING ASSEMBLY
SHEET 9	MATERIAL LIST, SHIPPING CLAMP ASSEMBLY
SHEET 10	STANDARD PART DETAILS

NOTES:

1. CONTRACTOR TO VERIFY ALL DIMENSIONS PRIOR TO FABRICATION.
2. ALL WELDING SHALL CONFORM TO THE PLAN DETAILS AND ASN D1.1-75 STRUCTURAL WELDING CODE AS MODIFIED BY THE AASHTO STANDARD SPECIFICATIONS FOR WELDING OF STRUCTURAL STEEL HIGHWAY BRIDGES (SECOND EDITION-1977) AND SPECIAL PROVISIONS.
3. THE CONTRACTOR SHALL NOTE FIELD WELDING DETAILS AS SHOWN ON SHEETS 5 AND 6.
4. PAINTING: ALL SURFACES NOT IN CONTACT WITH THE SEAL, CONCRETE, OR BEARINGS SHALL BE PAINTED WITH ONE COAT OF INORGANIC ZINC PRIMER.
5. NEOPRENE SEALS WILL BE BONDED IN PLACE USING SCHLASTIC ADHESIVE. ONLY THE TOP LOCKING LEGS SHALL RECEIVE ADHESIVE. CARE SHALL BE TAKEN TO INSURE THAT ADHESIVE IS NOT APPLIED TO SURFACES OTHER THAN LEGS.
6. THE SEALS AT THE ENDS OF THE JOINT WILL BE CAPPED WITH A 1/16" THICK NEOPRENE SHEET USING ARCH ALPHA ADHESIVE.
7. JOINT SHALL BE SHIPPED PRESET TO A WIDTH OF 68° F, UNLESS OTHERWISE NOTED BY THE ENGINEER PRIOR TO FABRICATION.

△ 8) UNLESS OTHERWISE SPECIFIED, ALL METAL SURFACES TO BE PAINTED OR COATED SHALL BE CLEANED BY BLAST CLEANING IN ACCORDANCE WITH THE NEAR-WHITE BLAST CLEANING METHOD.

CONTRACTOR: WILLIAMS BROTHERS CONST. CO
STATE: LOUISIANA PARISH: ST. CHARLES
PROJECT: #450-37-02 - MISSISSIPPI RIVER BR.
TYPE JOINT: WABO-MAURER D-2600
JOINT LOCATION: PIER 1N-NB
PAYLENGTH: LUMP SUM

NO	DATE	DESCRIPTION	NAME
5			
4			
△ 3	9-8-88	LEVEL PLR [illegible]	
△ 2	3-1-82	MANUFACTURER CORRECTION	
△ 1	8-16-79	REVISED	RLK
△	3-23-79	REVISED / STATE EXCEPT NOTE 8	RLK

REVISIONS

HUNSON BOURMAN ASSOCIATES, INC. — 1280 Niagara St., Buffalo, N.Y. 14213

DRAWN BY R.L.K. DATE 12-20-78 JOB NO. 6716
CHECKED BY R.L.P. DATE 1-30-79 SCALE NOTED

PLAN, ELEVATION, TYPICAL SECTION

SHEET 1 OF 10

DRAWING NUMBER A-3139

SHEET NUMBER 117

ST. CHARLES	4503(509)	450-37-0020
PARISH	FEDERAL PROJECT	STATE PROJECT
MN DT	TB MH	12-11-02 N.T.S.
DESIGNED CHECKED	DETAILED CHECKED	DATE SCALE

NO.	DATE	REVISION DESCRIPTION	BY

MISSISSIPPI RIVER BRIDGE (LULING)
DECK TEST SECTION
AND JOINT REPAIRS

VENDOR SUPPLIED SHOP DRAWINGS
E2 NORTHBOUND

HUVAL & ASSOCIATES, INC. Consulting Engineers

X:\HUVAL Projects\13154 (Luling)\CORE DWGS\revised 1-8-04\117-Shop Drawing.dwg, ulrich41, 02/25/2004 12:37:44 PM

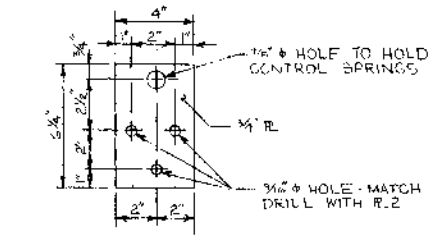

PLATE 1
3"=1'-0

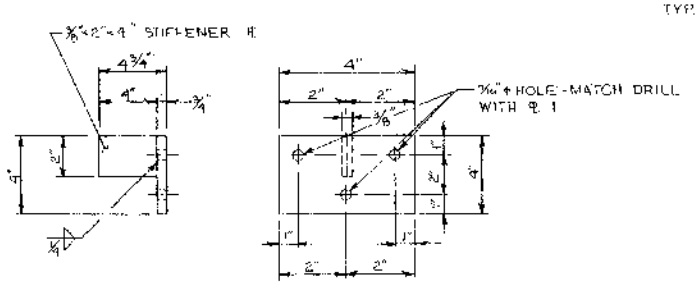

PLATE 2
N.T.S.

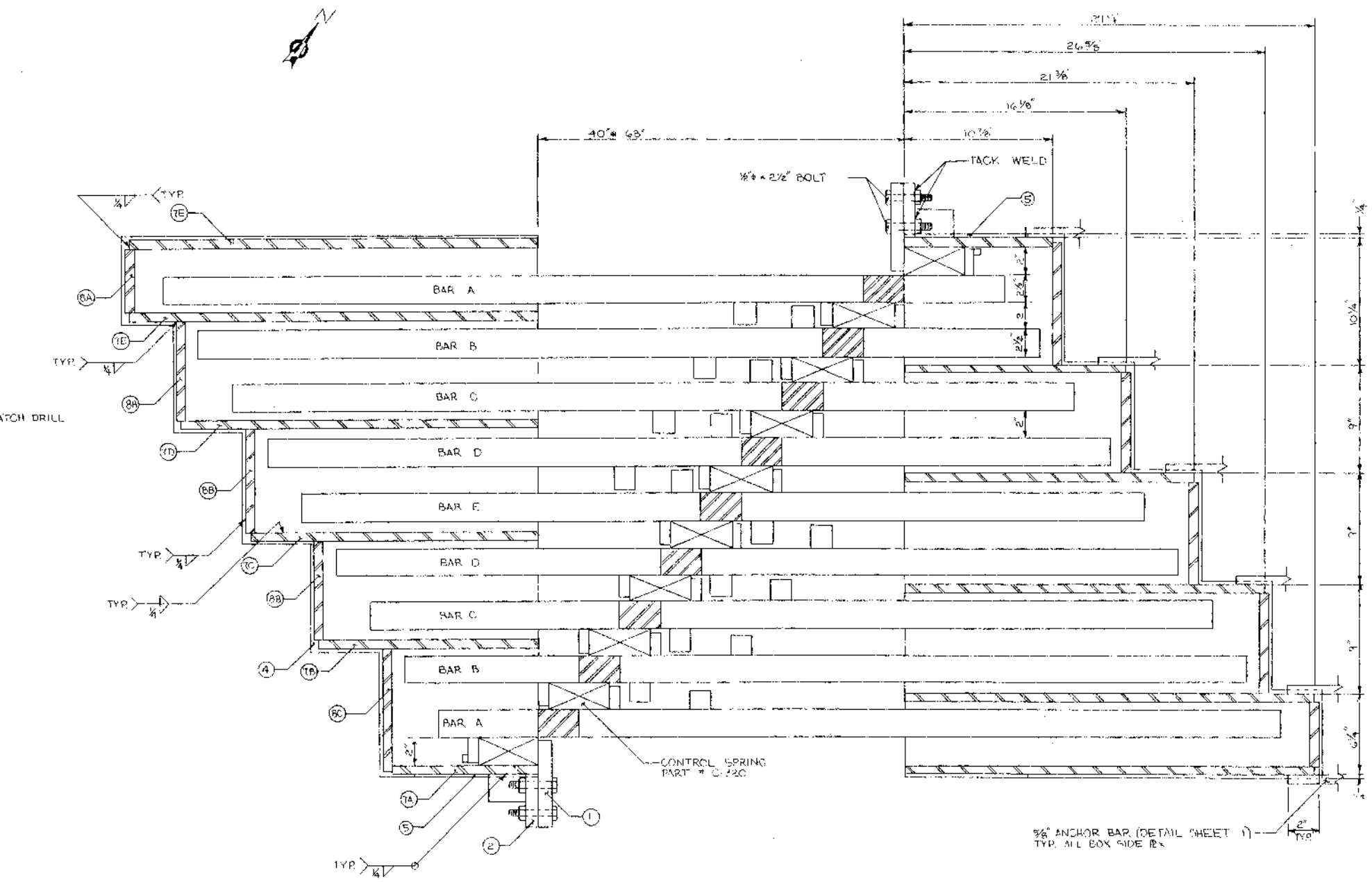

SUPPORT BOX DETAILS
N.T.S.

SOUTH SIDE

NOTE: NOT ALL ANCHOR BARS SHOWN

NORTH APPROACH SIDE

FOR INFORMATIONAL PURPOSES ONLY

NO.	DATE	DESCRIPTION	NAME
6			
5			
4			
3			
2			
1			

REVISIONS

madison boardman
CONSULTING ENGINEERS
1000 Niagara St. Buffalo, N.Y. 14213

DRAWN BY R.L.K. DATE 12-20-78
CHECKED BY R.L.P. DATE 1-30-79
JOB NO. 6/7/6
SCALE NOTED

GENERAL BOX SECTION

SHEET 2 OF 10

DRAWING NUMBER A-3481

SHEET NUMBER	118
PARISH	ST. CHARLES
FEDERAL PROJECT	4503(509)
STATE PROJECT	450-37-0020
DESIGNED / CHECKED	MH / DT
DETAILED / CHECKED	TB / MH
DATE / SCALE	12-11-02 / N.T.S.

REVISION DESCRIPTION | DATE | NO.

MISSISSIPPI RIVER BRIDGE (LULING)
DECK TEST SECTION
AND JOINT REPAIRS

VENDOR SUPPLIED SHOP DRAWINGS
E2 NORTHBOUND

HUVAL & ASSOCIATES, INC.
Consulting Engineers

X:\HUVAL Projects\3154 (Luling)\CORE.DWG\Shrevised 1-8-04\118\Shop Drawing.dwg, Layout1, 02/25/2004 12:38:45 PM

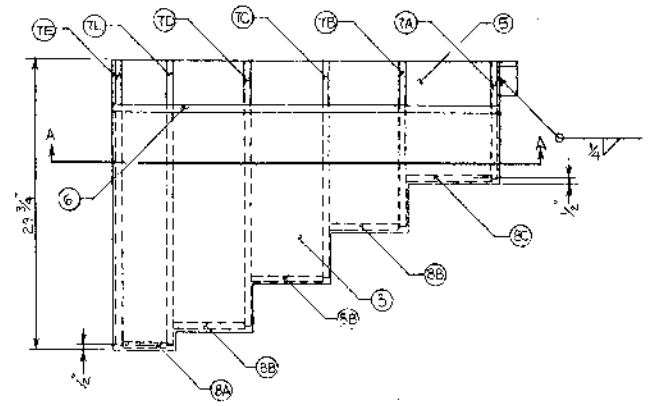

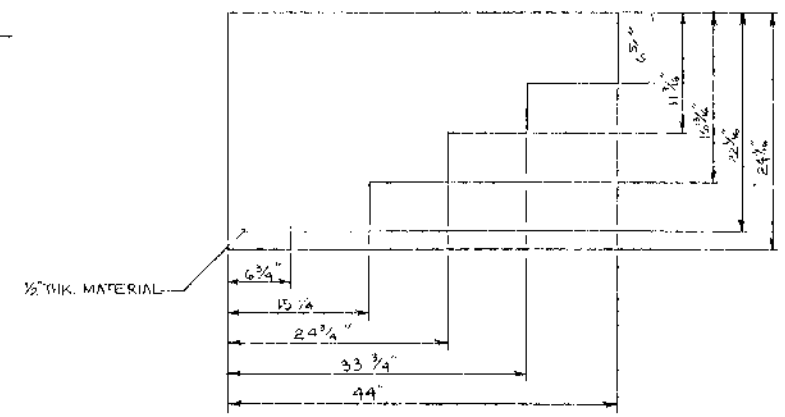

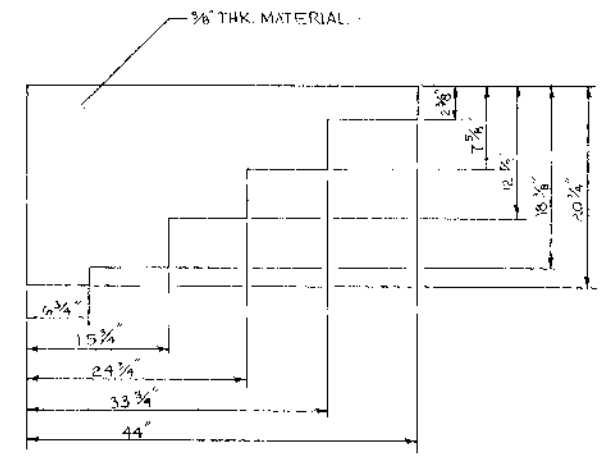

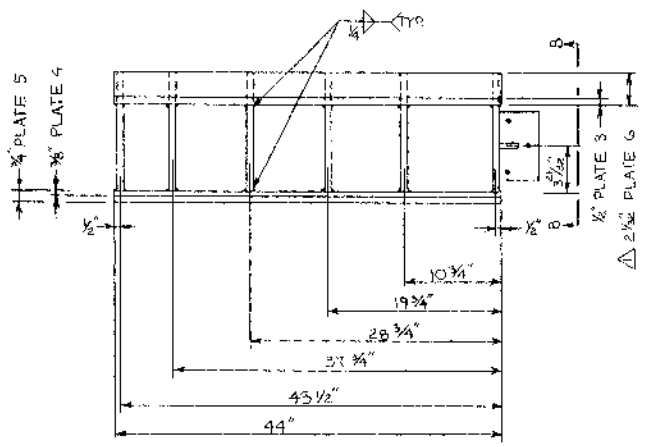

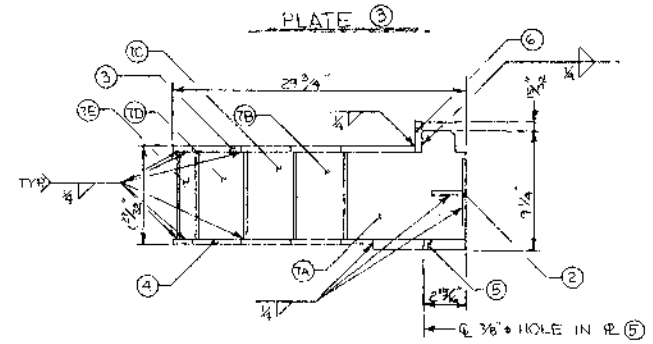

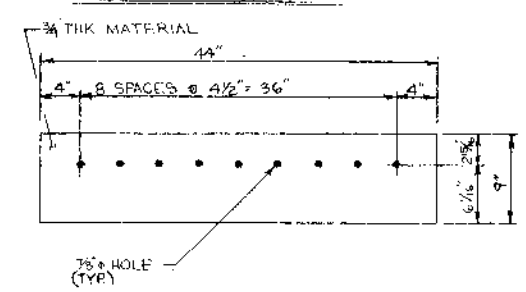

FOR INFORMATIONAL PURPOSES ONLY

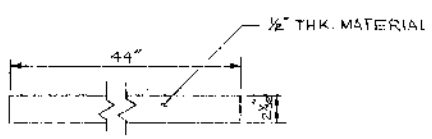

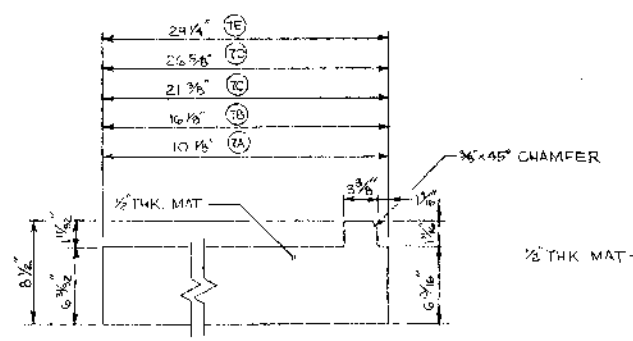

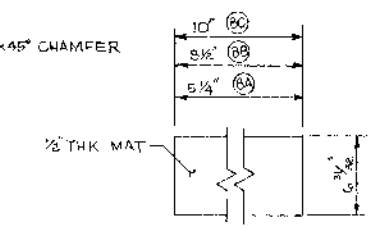

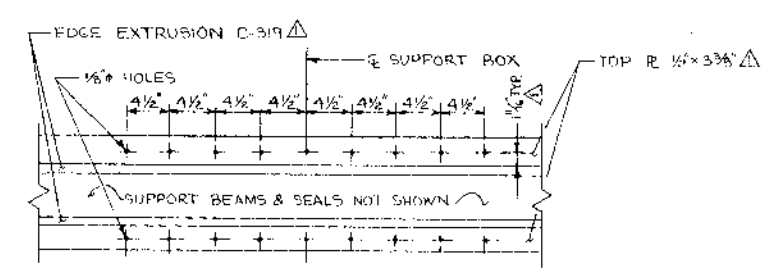

NO.	DATE	DESCRIPTION	NAME
6			
5			
4			
3			
2			
1		NOW REVISED	RLK

REVISIONS

Watson Bowman Engineers, Inc. — 280 Hospital St., Buffalo, N.Y. 14213

DRAWN BY R.L.K. DATE 12-20-78 JOB NO. 676
CHECKED BY R.L.P. DATE 12-31-78 SCALE N.T.S.

SUPPORT BOX PLATE DETAILS

SHEET 3 OF 10

DRAWING NUMBER A-3489

SHEET NUMBER 119

ST. CHARLES | 4903(509) | 450-37-0020

PARISH | FEDERAL PROJECT | STATE PROJECT

DESIGNED MH | DETAILED TB | DATE 12-11-02
CHECKED DT | CHECKED MH | SCALE N.T.S.

PROPOSAL DESCRIPTION | DATE | BY | NO.

MISSISSIPPI RIVER BRIDGE (LULING)
DECK TEST SECTION
AND JOINT REPAIRS

VENDOR SUPPLIED SHOP DRAWINGS
E2 NORTHBOUND

STATE OF LOUISIANA — DEPARTMENT OF TRANSPORTATION AND DEVELOPMENT

HUVAL & ASSOCIATES, INC. Consulting Engineers

X:\HUVAL Projects\3154 (Luling)\CORE DWGS\revised 1-6-04\119\Shop Drawing dwg, ...\nov11, 02/25/2004 12:29:27 PM

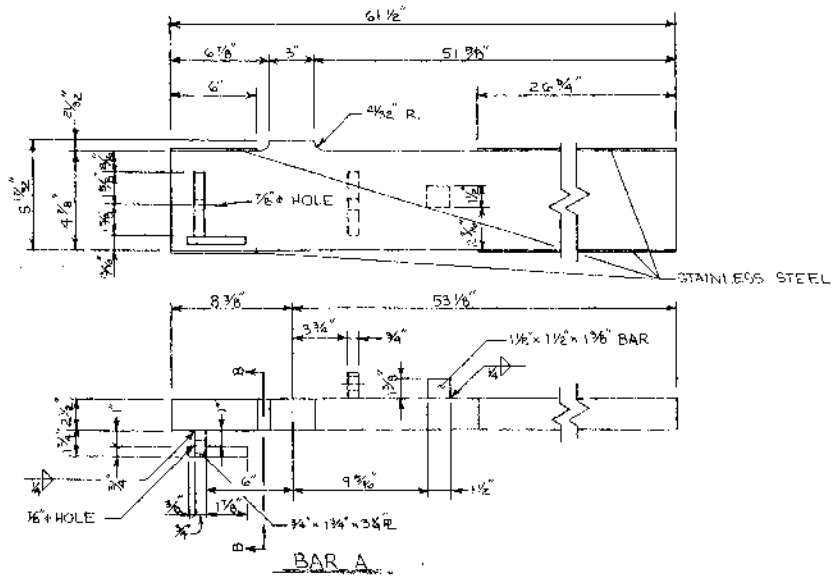

BAR A

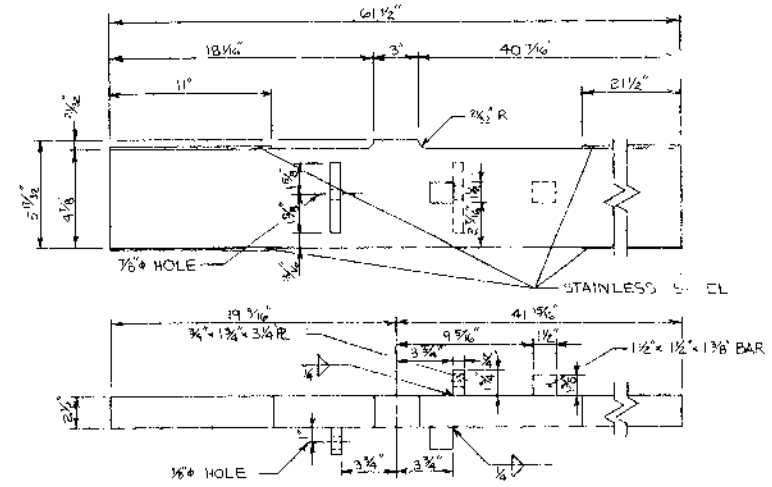

BAR C

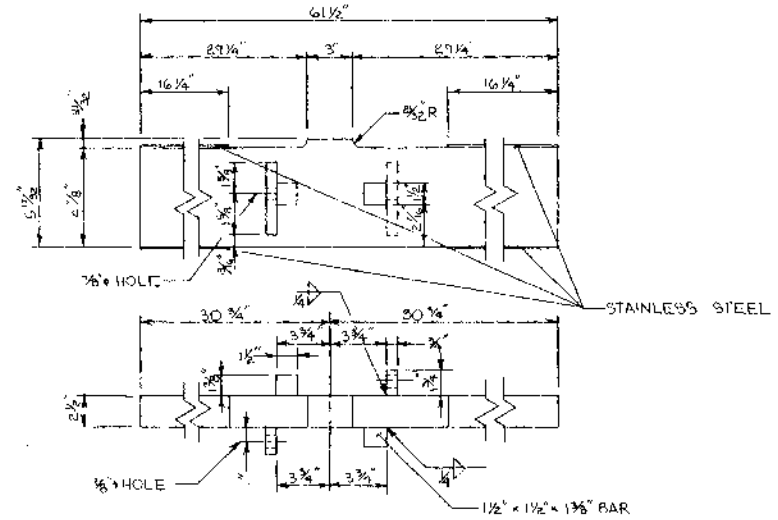

BAR E

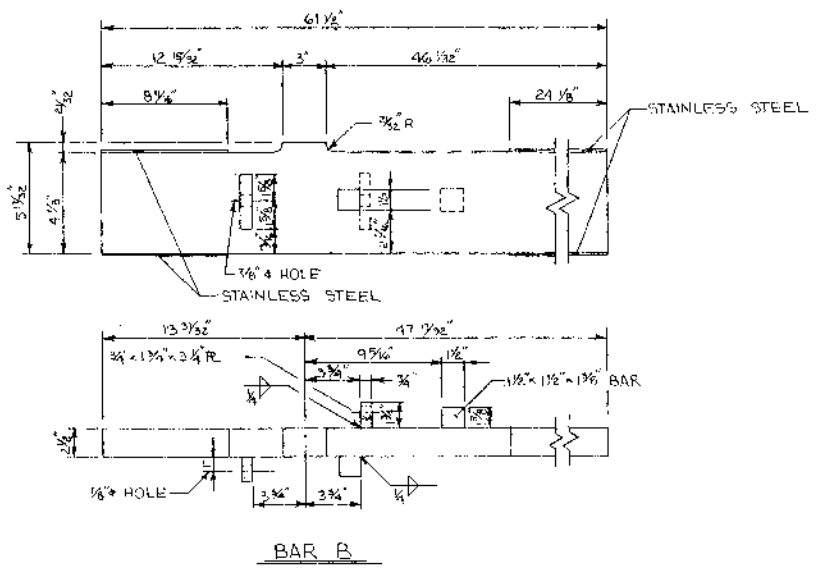

BAR B

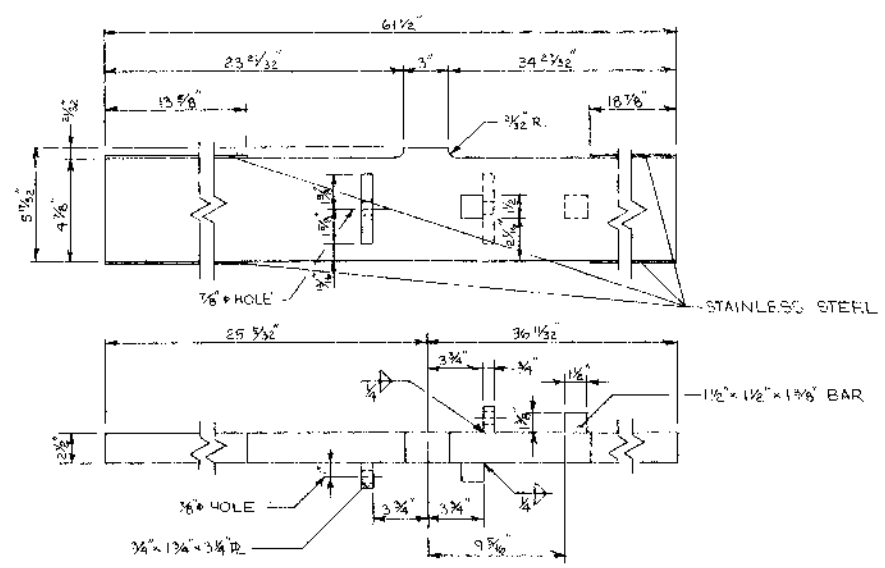

BAR D

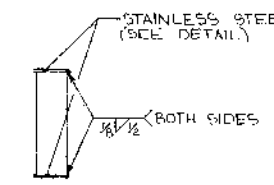

TYPICAL SECTION THRU STAINLESS STEEL

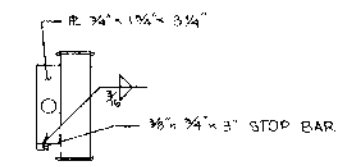

SECTION B-B

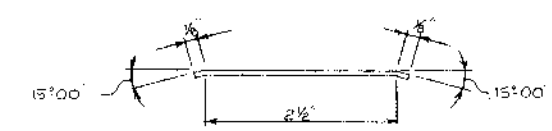

12 GA STAINLESS STEEL
TYPE 304 - 2B FINISH
N.T.S.

ANY TOLERANCE BUILD-UP IN ADDITION TO THE COMPONENTS SHALL BE COMPENSATED FOR BY SHAVING OFF INCREMENTS OF THE SUPPORT BAR UPSHOOT.

FOR INFORMATIONAL PURPOSES ONLY

NO.	DATE	DESCRIPTION	NAME
6			
5			
4			
3			
2			
1			

REVISIONS

watson bowman acme

DRAWN BY R.L.K. DATE 12-20-78 JOB NO. 6710
CHECKED BY R.L.P. DATE 2-1-79 SCALE NOTED

SUPPORT BAR DETAILS

SHEET 4 OF 10

DRAWING NUMBER A-3489

MISSISSIPPI RIVER BRIDGE (LULING)
DECK TEST SECTION
AND JOINT REPAIRS

VENDOR SUPPLIED SHOP DRAWINGS
E2 NORTHBOUND

HUVAL & ASSOCIATES, INC.
Consulting Engineers

SHEET NUMBER	120
PARISH	ST. CHARLES
FEDERAL PROJECT	4503(509)
STATE PROJECT	450-37-0020
DESIGNED MH	CHECKED DT
DETAILED TB	CHECKED MH
DATE 12-11-02	SCALE N.T.S.

REVISION DESCRIPTION | DATE | NO.

X:\HUVAL Projects\3154 (Luling)\CORE DWGS\revised 1-8-04\120\Shop Drawing.dwg Layout1, 02/25/2004 12:40:05 PM

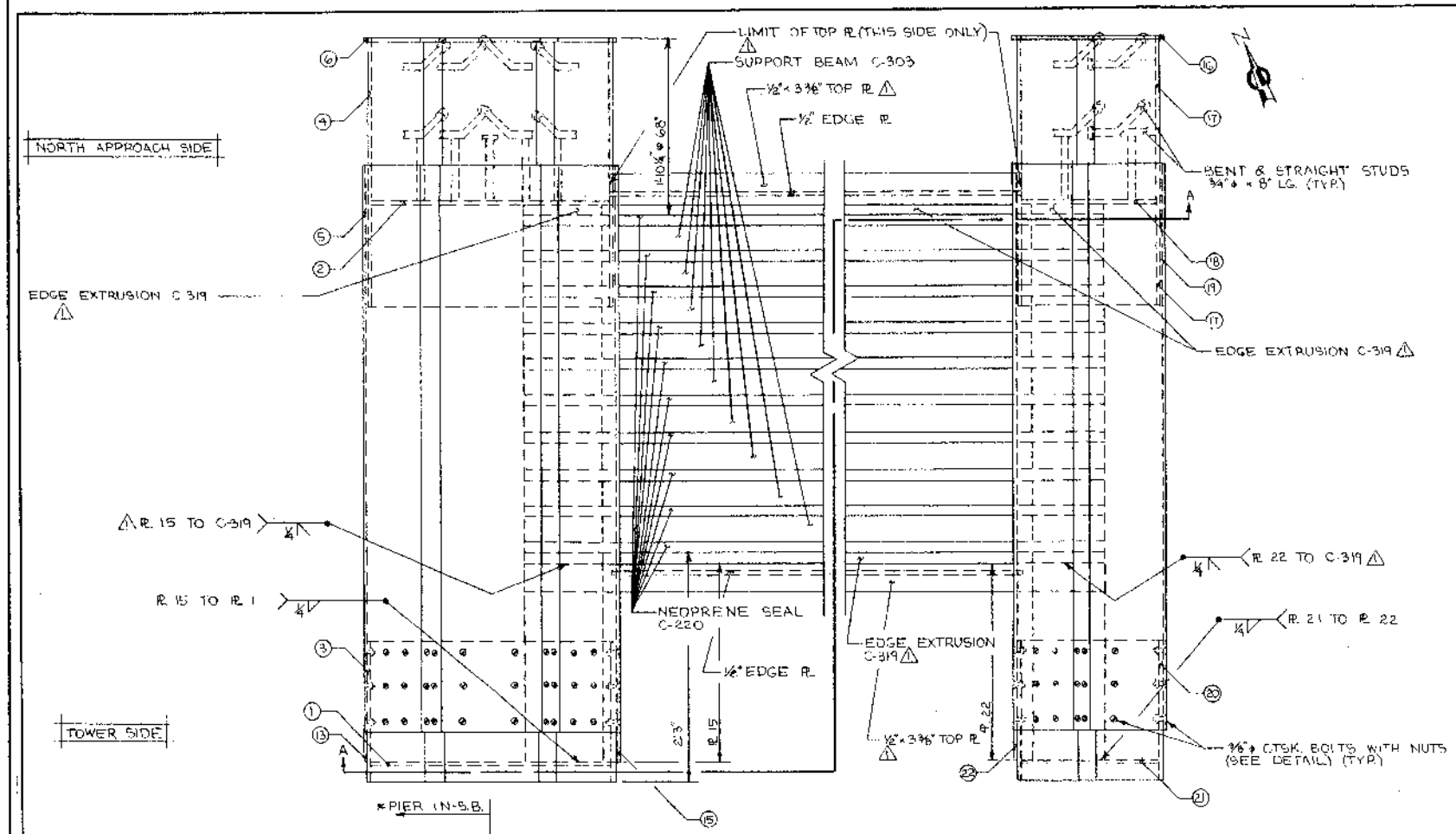

PLAN
1½" = 1'-0"

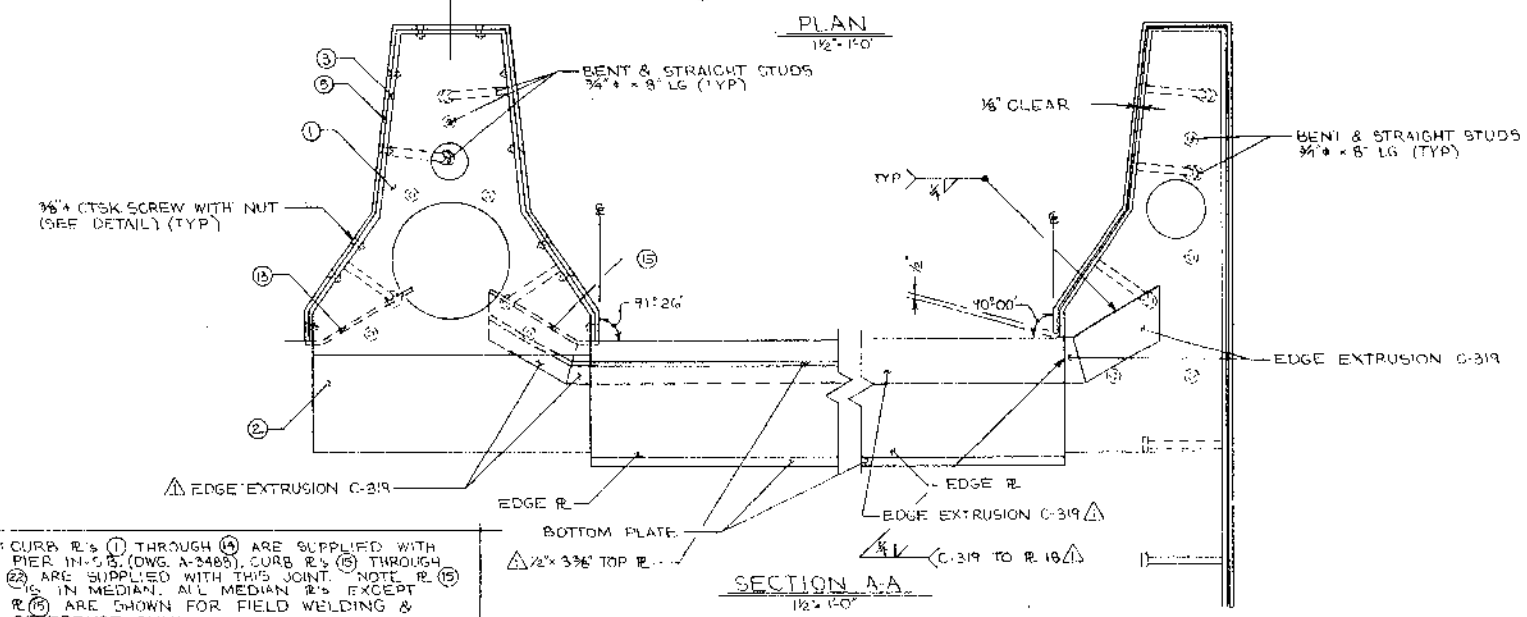

SECTION A-A
1½" = 1'-0"

* NOTE: CURB PL'S ① THROUGH ⑭ ARE SUPPLIED WITH PIER IN-S.B. (DWG. A-3488). CURB PL'S ⑮ THROUGH ㉒ ARE SUPPLIED WITH THIS JOINT. NOTE PL ⑮ IS IN MEDIAN. ALL MEDIAN PL'S EXCEPT PL ⑮ ARE SHOWN FOR FIELD WELDING & REFERENCE ONLY.

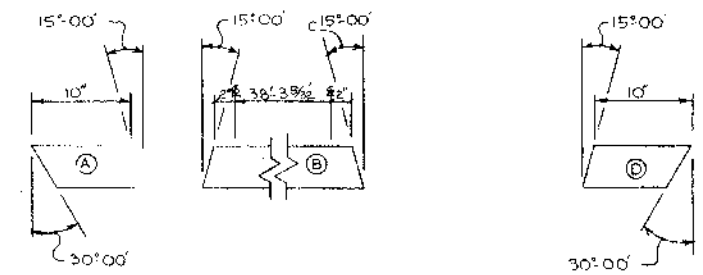

PIECE DETAILS

C-303 - CUT 9 A, B, D

C-319 - CUT 2 A, B, D

NOTE LOCATION OF PIECES IN PLAN TO DETERMINE POSITION BEFORE CUTTING

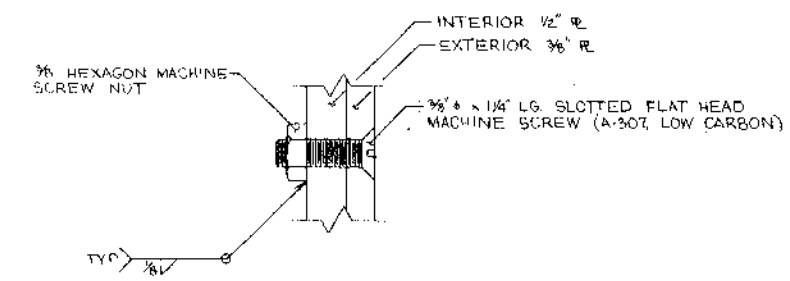

SCREW DETAIL
FULL

NOTE: CURB PLATES TO BE SHIPPED ASSEMBLED AS FOLLOWS:

1) PLATES 16, 17, 18
2) PLATES 20, 21, 19
3) PLATE 22
4) PLATE 15 (IN MEDIAN)

CARE SHALL BE EXERCISED IN ANY FIELD WELDING OF CURB PLATES TO MAINTAIN PROPER SLIDING CHARACTERISTICS. SEE SHEETS 9 & 6 FOR ANY FIELD WELDING DETAILS.

FOR INFORMATIONAL PURPOSES ONLY

NO	DATE	DESCRIPTION	NAME
5			
4			
3			
2			
1	10-17-79	REVISED	RLK

REVISIONS

Jenison Boughton Associates PC, 1300 Niagara St., Buffalo, N.Y. 14213

DRAWN BY R.L.K. DATE 12-20-78 JOB NO. 6740

CHECKED BY R.L.P. DATE 2-2-79 SCALE NOTED

CURB ASSEMBLY

SHEET 5 OF 10

DRAWING NUMBER A-3489

SHEET NUMBER 121

DESIGNED SMH	CHECKED	DETAILED TB	CHECKED WH
DATE 12-11-02	SCALE N.T.S.	PARISH ST. CHARLES	FEDERAL PROJECT 4503(409)
STATE PROJECT 450-37-0020			

REVISION DESCRIPTION | BY | DATE | NO.

MISSISSIPPI RIVER BRIDGE (LULING)
DECK TEST SECTION
AND JOINT REPAIRS

VENDOR SUPPLIED SHOP DRAWINGS
E2 NORTHBOUND

HUVAL & ASSOCIATES, INC. Consulting Engineers

X:\HUVAL Projects\3154 (Luling)\CORE DWGS\revised 1-9-04\121\Shop Drawing.dwg, Layout1, 02/26/2004 12:40:45 PM

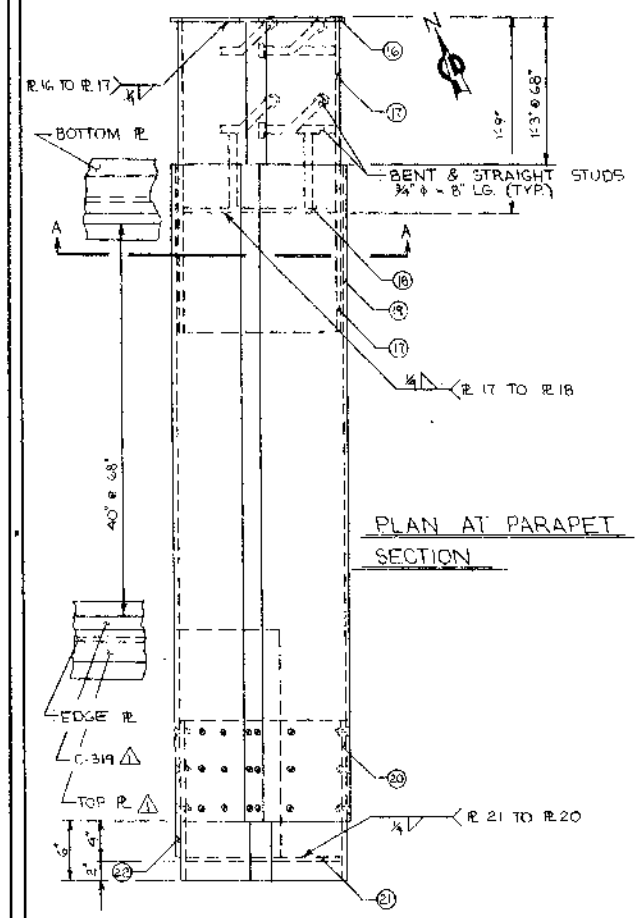

PLAN AT PARAPET SECTION

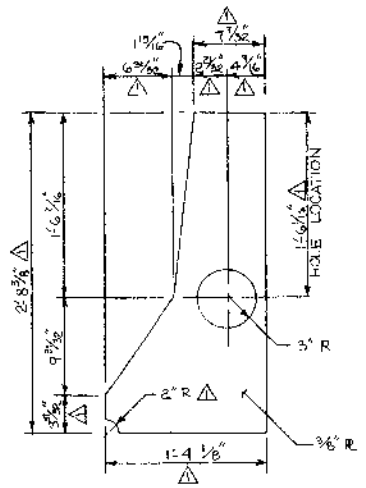

PLATE 21
1½" = 1'-0"

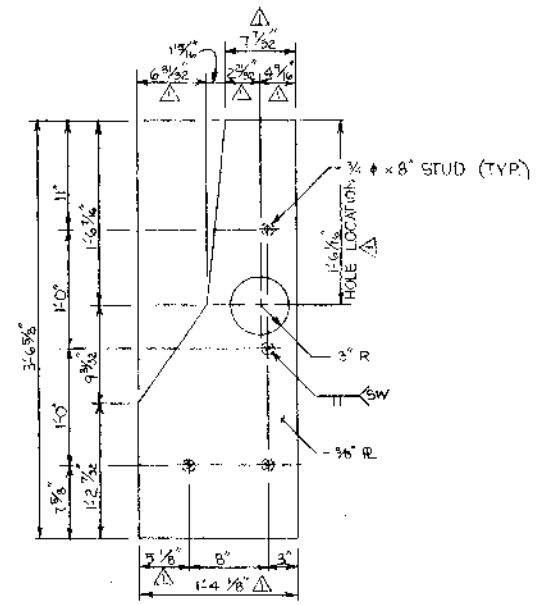

PLATE 18
1½" = 1'-0"

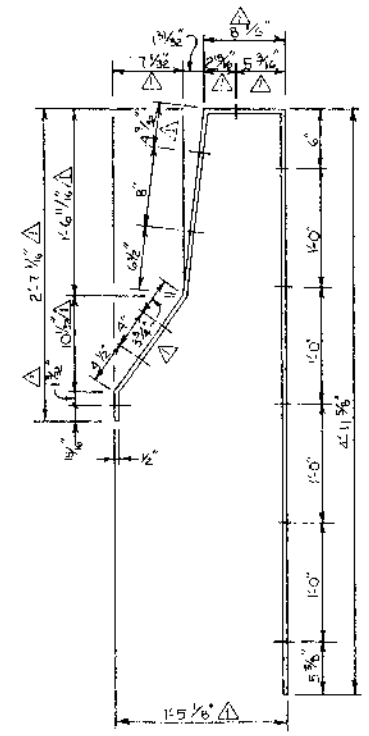

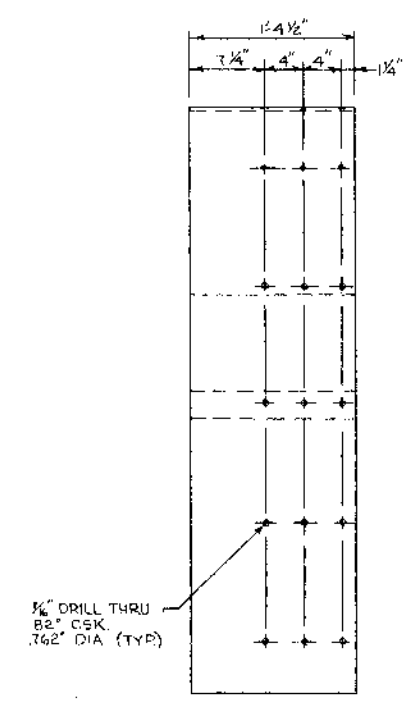

PLATE 20
1½" = 1'-0"

NOTE: MATCH DRILL PL 20 & PL 19

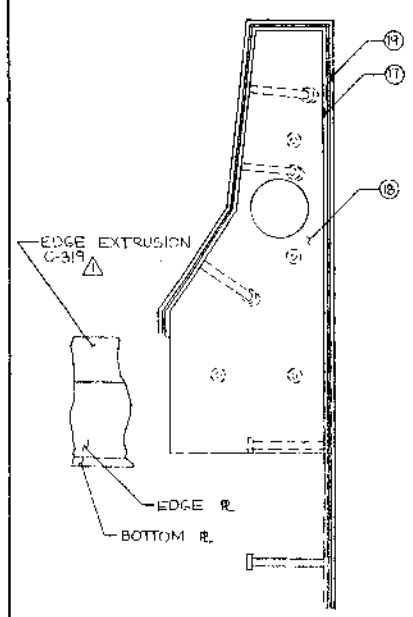

SECTION A-A
1½" = 1'-0"

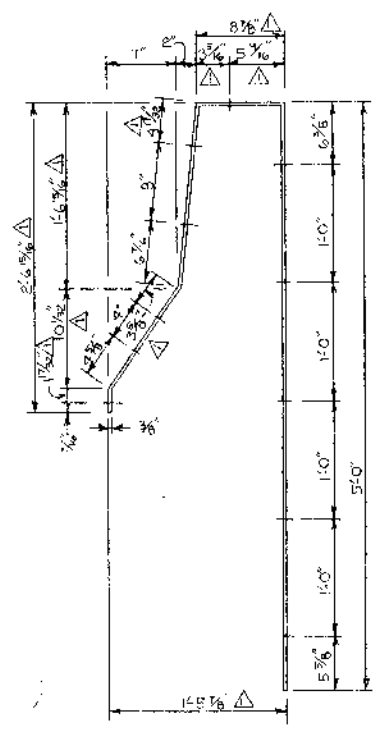

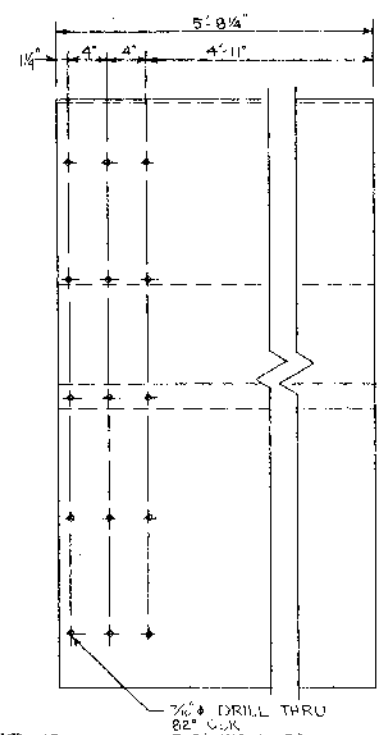

PLATE 19
1½" = 1'-0"

NOTE: MATCH DRILL PL 20 & PL 19

FOR INFORMATIONAL PURPOSES ONLY

NOTE: CURB PLATES TO BE SHIPPED ASSEMBLED AS FOLLOWS:

1) PLATES 16, 17, 18
2) PLATES 20, 21, 19
3) PLATE 22
4) PLATE 15 (IN MEDIAN)

CARE SHALL BE EXERCISED IN ANY FIELD WELDING OF CURB PLATES TO MAINTAIN PROPER SLIDING CHARACTERISTICS. SEE SHEETS 5 & 6 FOR ANY FIELD WELDING DETAILS.

NO.	DATE	DESCRIPTION	NAME
5			
4			
3			
2			
1			
0-1-79		REVISE	RLK

REVISIONS

watson boulman PROCUREMENT INC. 5200 Hedgewood St. Pittsburgh, Pa. 15213

DESIGNED BY R.L.K. DATE 12-20-78 PROJECT NO. 676-71
CHECKED BY R.L.P. DATE 2-2-79 SCALE NOTED

CURB PLATE DETAILS

SHEET 6 OF 10

DRAWING NUMBER A-3489

SHEET NUMBER 122

ST. CHARLES | PARISH | FEDERAL PROJECT 450.1(509) | STATE PROJECT 450-37-0020

DESIGNED MH | CHECKED DT | DETAILED TB | CHECKED MH | DATE 12-11-02 | SCALE N.T.S.

REVISION DESCRIPTION | DATE | BY | NO.

MISSISSIPPI RIVER BRIDGE (LULING)
DECK TEST SECTION
AND JOINT REPAIRS

VENDOR SUPPLIED SHOP DRAWINGS
E2 NORTHBOUND

HUVAL & ASSOCIATES, INC. Consulting Engineers

X:\HUVAL Projects\3134-Luling\MCORE DWGS\revised 1-8-04\122-Shop Drawing dwg, Layout1, 02/25/2004 12:42:10 PM

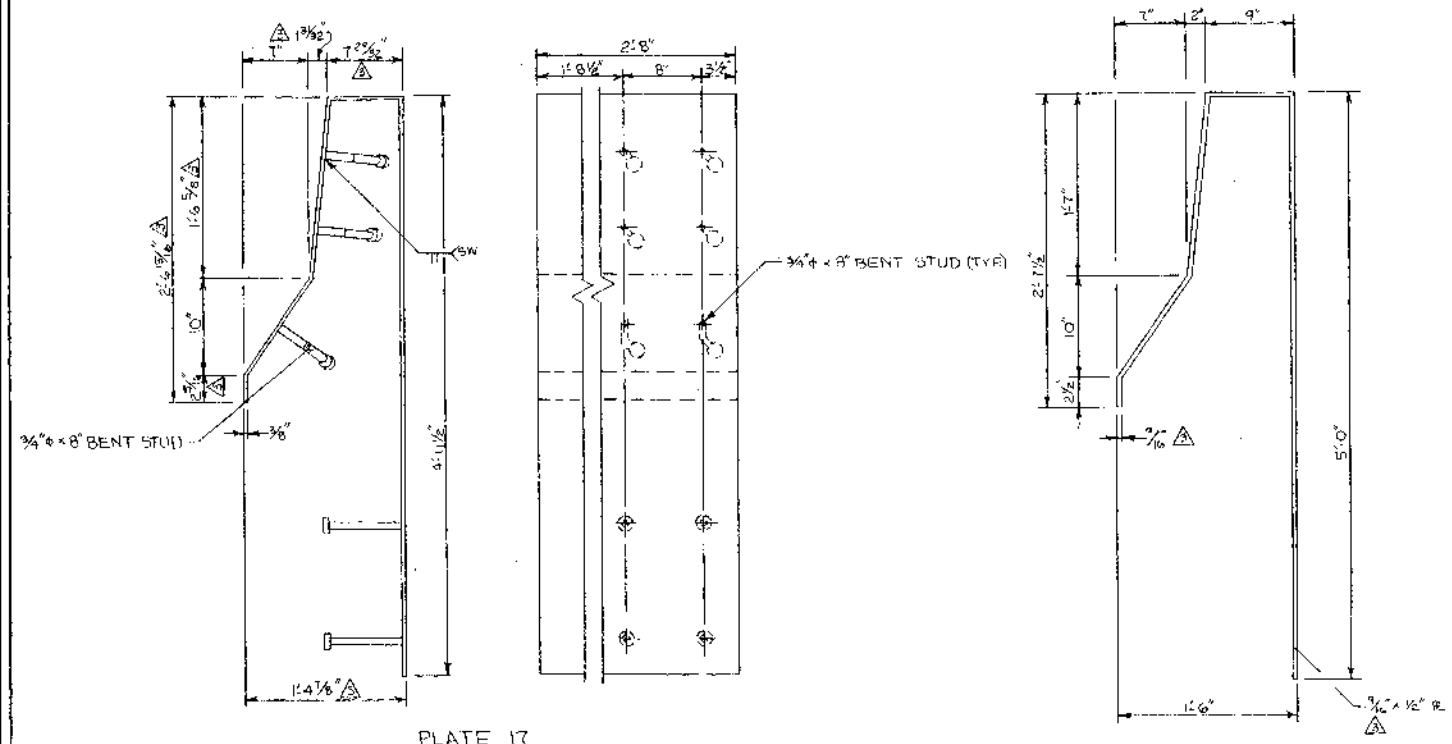

PLATE 17
1/2" = 1'-0"

PLATE 16
1/2" = 1'-0"

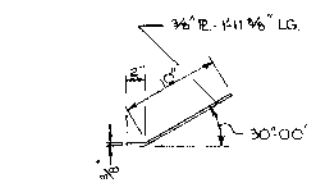

PL 15 & PL 22
1/2" = 1'-0"
NOTE: PL 15 IS IN MEDIAN

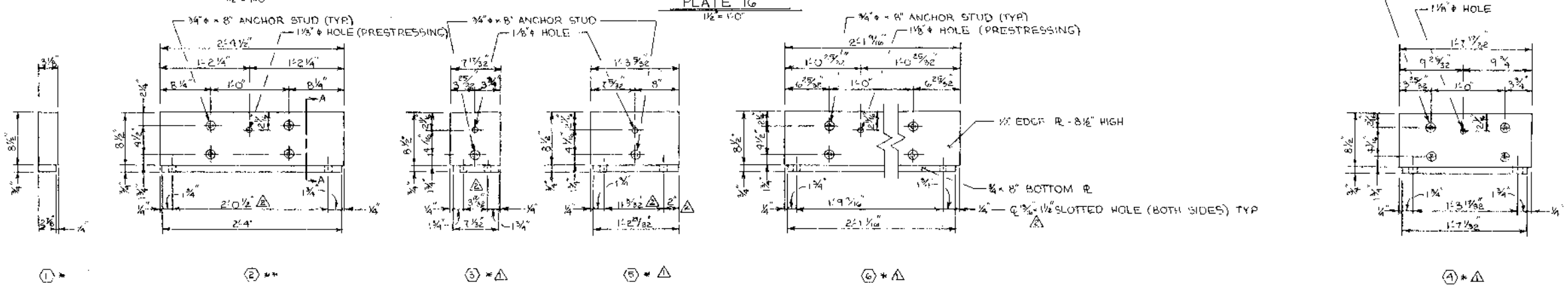

EDGE, BOTTOM PLATE DETAILS
1/2" = 1'-0"

* 2 REQUIRED- 1 AS SHOWN FOR TOWER SIDE, 1 WITH ANCHOR STUDS ON OPPOSITE SIDE FOR NORTH APPROACH SIDE.

** 6 REQUIRED- 3 AS SHOWN FOR TOWER SIDE, 3 WITH ANCHOR STUDS ON OPPOSITE SIDE FOR NORTH APPROACH SIDE.

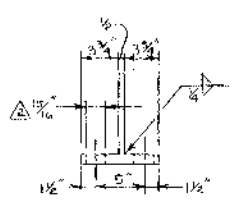

SECTION A-A

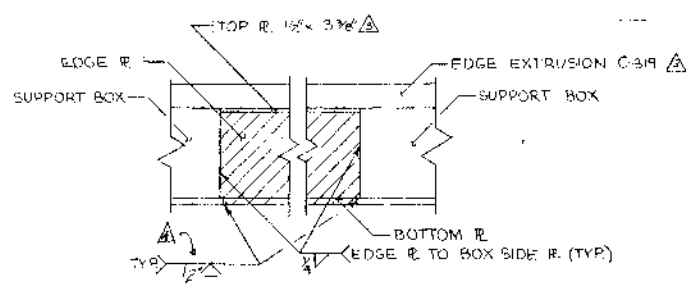

WELD DETAILS
N.T.S.

FOR INFORMATIONAL PURPOSES ONLY

NO.	DATE	DESCRIPTION	NAME
4			
3			
2	3-15-80	MANUFACTURER REVISION	BLP
1	10-23-79	REVISED/STATE	RLK
0	2-26-79	REVISED/STATE	RLK
△	5-24-78	REVISED/STATE	RLK

REVISIONS

watson bowman associates inc. 1280 Niagara St. Buffalo, N.Y. 14213

DRAWN BY RLK | DATE 12-20-78 | JOB NO. 676
CHECKED BY RLP | DATE 2-2-79 | SCALE NOTED

CURA PLATE DETAILS

SHEET 7 OF 10

DRAWING NUMBER A-3489

SHEET NUMBER 123

PARISH	ST. CHARLES	
FEDERAL PROJECT	4503(509)	
STATE PROJECT	450-37-0020	
DESIGNED / CHECKED	MH / DT	
DETAILED / CHECKED	TB / MH	
DATE / SCALE	12-11-02 / N.T.S.	

NO. | DATE | REVISION DESCRIPTION | BY

MISSISSIPPI RIVER BRIDGE (LULING)
DECK TEST SECTION AND JOINT REPAIRS

VENDOR SUPPLIED SHOP DRAWINGS
E2 NORTHBOUND

HUVAL & ASSOCIATES, INC. Consulting Engineers

X:\HUVAL Projects\3154 (Luling)\CORE DWGS\revised 1-8-04\1231Shop Drawing.Dwg, Layout1 02/25/2004 12:42:52 PM

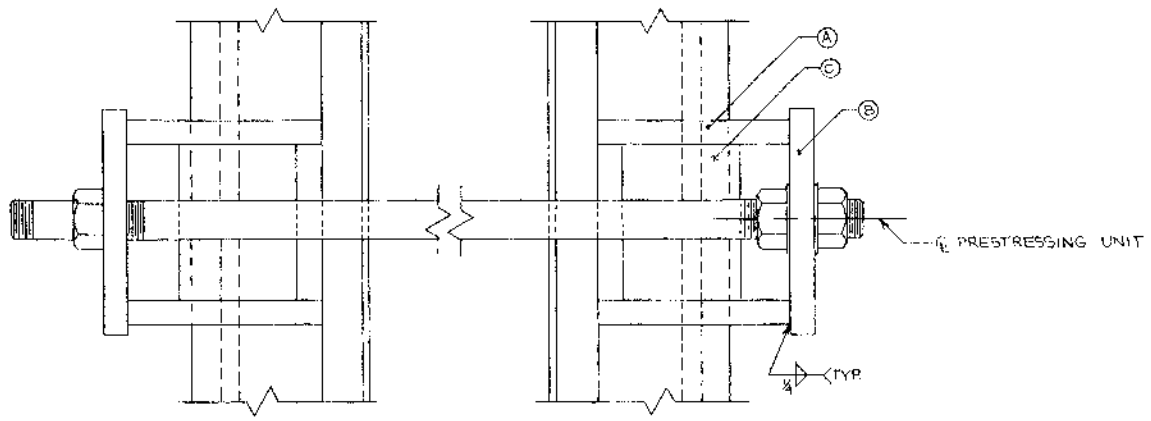

PLAN
N.T.S.

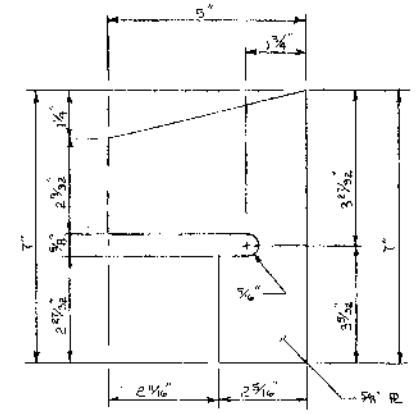

PLATE Ⓐ △1

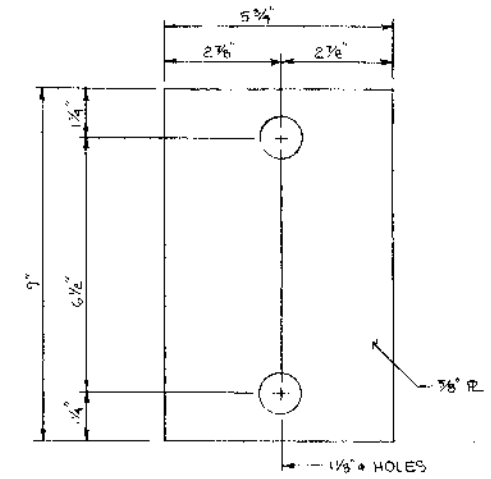

PLATE Ⓑ

FOR INFORMATIONAL PURPOSES ONLY

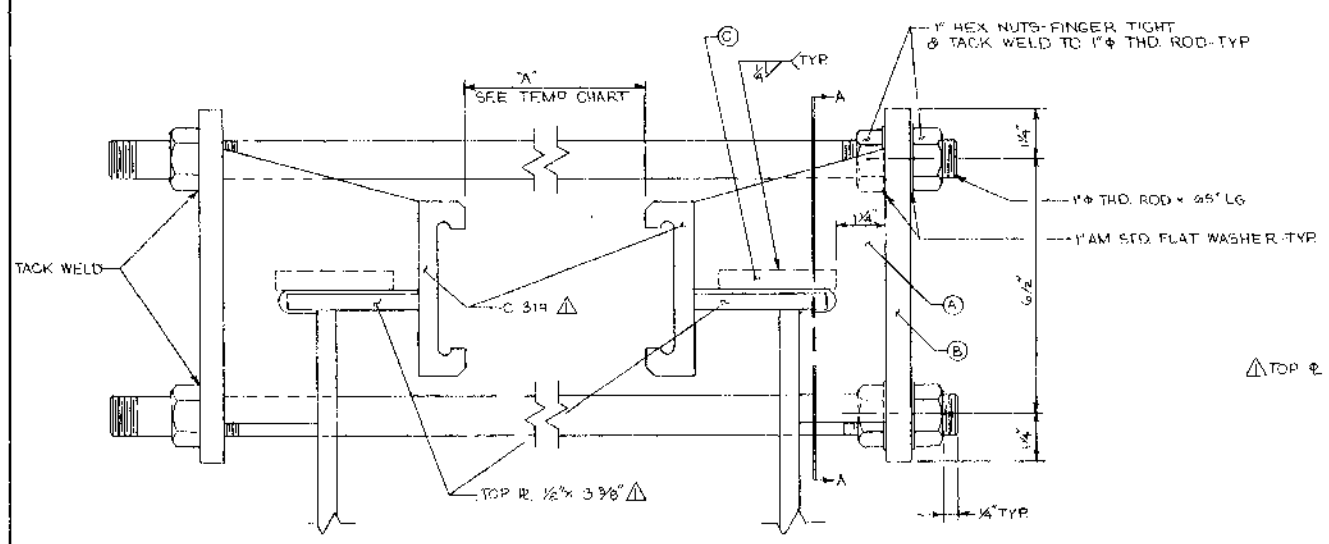

ELEVATION
N.T.S.

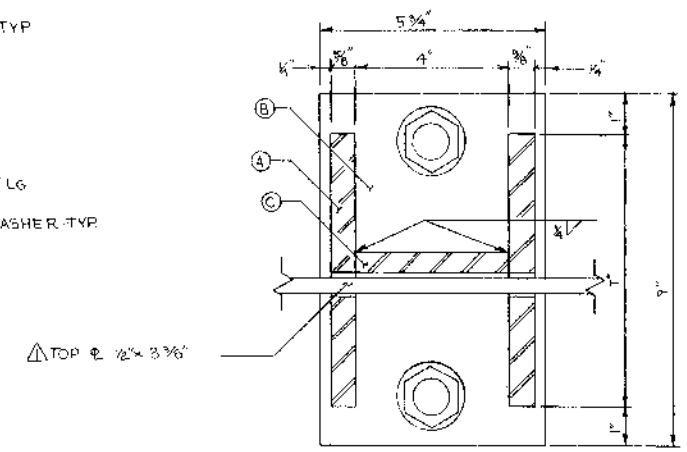

SECTION A-A

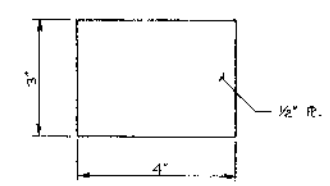

PLATE Ⓒ

NOTE:

PRESTRESSING DEVICES ARE PROPERTY OF MANUFACTURER AND WILL BE RETURNED TO THE MANUFACTURER UPON COMPLETION OF WORK FOR CREDIT.

LOCATE PRESTRESSING AS SHOWN ON SHEET 1.

TEMPERATURE CHART △3

TEMP	20°	30°	40°	50°	60°	68°	70°	80°	90°	100°	110°	120°
DIM. "A"	48 3/4	46 5/8	44 7/8	43 3/8	41 13/16	40	39 21/32	37 23/32	36 3/32	34 13/32	32 21/32	30 7/16

NO	DATE	DESCRIPTION	NAME
4			
3			
2			
1			
△1	9-18-79	[illegible]	
△1	10-23-79	REVISED / STATE	RLK

REVISIONS

Watson Bowman Associates Inc. 1290 Niagara St. Buffalo, N.Y. 14213

DRAWN BY R.L.K. DATE 12-20-78 JOB NO. 676
CHECKED BY R.L.P. DATE 2-5-79 SCALE NOTED

PRESTRESSING ASSEMBLIES

SHEET 8 OF 10

DRAWING NUMBER A-3489

SHEET NUMBER 124

PARISH: ST. CHARLES	FEDERAL PROJECT: 450A(509)	STATE PROJECT: 450-37-0020
DESIGNED: MH / CHECKED: DT	DETAILED: TB / CHECKED: MH	DATE: 12-11-02 / SCALE: N.T.S.

NO. DATE REVISION DESCRIPTION BY

MISSISSIPPI RIVER BRIDGE (LULING)
DECK TEST SECTION
AND JOINT REPAIRS

VENDOR SUPPLIED SHOP DRAWINGS
E2 NORTHBOUND

STATE OF LOUISIANA DEPARTMENT OF TRANSPORTATION AND DEVELOPMENT

HUVAL & ASSOCIATES, INC. Consulting Engineers

X:\HUVAL Projects\3154 (Luling)\CORE DWG\Sheet\ed 1-5-04\1248\shop Drawing.dwg, Layout1, 02/05/2004 12:43:30 PM

MATERIAL LIST

ITEM	SIZE	QUANTITY	MATERIAL
△ TOP PL	½" × 3 5/8" × 41'-0"	2	
SUPPORT BEAM C-303	41'-0"	9	A-242
NEOPRENE SEAL C-220	41'-0"	10	NEOPRENE
COMPRESSION SPRING C-306	2 5/16" × 2 5/16" × 2 3/16"	126	URETHANE
BEARING C-307	2 3/16" × 2 5/16" × 1 9/32"	126	URETHANE
CONTROL SPRING C-320	1 7/8" × 3 7/8" × 7 3/4"	70	URETHANE
REMOVABLE MOLDING C-453	1 13/16" × 1½" × 43"	14	PLASTIC
△ EDGE ANGLE C-319	4'-0"	2	A-242
• BOX ASSEMBLY •			
PLATE 3	½" × 44" × 24 5/16"	14	A-588
PLATE 4	3/8" × 44" × 20 3/4"	14	A-588
PLATE 5	3/4" × 44" × 9"	14	A-588
PLATE 6	½" × 44" × 2"	14	A-588
PLATE 7A	½" × 8½" × 10 7/8"	14	A-588
PLATE 7B	½" × 8½" × 16 1/8"	14	A-588
PLATE 7C	½" × 8½" × 21 3/8"	14	A-588
PLATE 7D	½" × 8½" × 26 5/8"	14	A-588
PLATE 7E	½" × 8½" × 29 1/4"	28	A-588
PLATE 8A	½" × 6 5/32" × 5 3/4"	14	A-588
PLATE 8B	½" × 6 5/32" × 8½"	42	A-588
PLATE 8C	½" × 6 5/32" × 10"	14	A-588
HOLDING PLATE 1	3/4" × 4" × 6 1/4"	14	A-588
HOLDING PLATE 2	3/4" × 4" × 4"	14	A-588
STIFFENER PLATE	3/8" × 2" × 4"	14	A-588
ANCHOR BAR	5/8" ϕ × 1'-8 3/4"	84	A-615
• SUPPORT BAR •			
SUPPORT BAR A	2½" × 5 7/32" × 61½"	14	A-588
SUPPORT BAR B	2½" × 5 7/32" × 61½"	14	A-588
SUPPORT BAR C	2½" × 5 7/32" × 61½"	14	A-588
SUPPORT BAR D	2½" × 5 7/32" × 61½"	14	A-588
SUPPORT BAR E	2½" × 5 7/32" × 61½"	7	A-588
STAINLESS STEEL	12 GUAGE - 2 3/4" WIDE	1@ 343'-0"	TYPE 304-2B FIN
STOP PL	1½" × 1½" × 1 3/8"	112	A-588
STOP PL	3/8" × 3/4" × 3"	14	A-588
HOLDING PL	3/4" × 1 3/4" × 3 3/4"	126	A-588
• CURB PLATES •			
PLATE 15 (IN MEDIAN)	3/8" × 1'-0" × 1'-11 3/16"	1	A-588
△ PLATE 16	7/16" × ½" × 8'-6 9/16"	1	A-588
△ PLATE 17	3/8" × 1'-4 5/32" × 2'-8"	1	A-588
△ PLATE 18	3/8" × 1'-4 1/8" × 3'-6 3/8"	1	A-588
△ PLATE 19	3/8" × 5 5/8" × 8'-6 1/8"	1	A-588
△ PLATE 20	½" × 1'-4 1/2" × 8'-5 1/8"	1	A-588
△ PLATE 21	3/8" × 1'-4 1/8" × 2'-8 3/16"	1	A-588
PLATE 22	3/8" × 1'-0" × 1'-11 3/16"	1	A-588
BENT ANCHOR STUD	3/4" ϕ × 8" LG	6	A-108
STRAIGHT ANCHOR STUD	3/4" ϕ × 8" LG	50	A-108
SLOTTED FLATHEAD MACHINE SCREW	3/8" ϕ × 1 3/4" LG	33	A-325
HEXAGON MACHINE SCREW NUT	3/8"	33	A-325
△ EDGE PLATE 6	½" × 8½" × 2'-11 7/16"	2	A-588
EDGE PLATE 1	½" × 8½" × 3 1/8"	2	A-588
EDGE PLATE 2	½" × 8½" × 2'-4½"	6	A-588
EDGE PLATE 3	½" × 8½" × 7 17/32"	2 △	A-588
EDGE PLATE 4	½" × 8½" × 1'-7 13/32" △	2	A-588
EDGE PLATE 5	½" × 8½" × 1'-3 9/32" △	2	A-588
BOTTOM PLATE 1	3/4" × 8" × 2 3/8"	2	A-588
BOTTOM PLATE 2	3/4" × 8" × 2'-4"	6	A-588
BOTTOM PLATE 3	3/4" × 8" × 1 7/32"	2 △	A-588
BOTTOM PLATE 4	3/4" × 8" × 1'-7 7/32" △	2	A-588
BOTTOM PLATE 5	3/4" × 8" × 1'-2 9/32" △	2	A-588
△ BOTTOM PLATE 6	3/4" × 8" × 2'-1 7/16"	2	A-588
BONDASTIC ADHESIVE	GALLON	2	
NEOPRENE SHEET	1/16" × 4" × 4"	20	NEOPRENE
PAINT (INORGANIC ZINC PRIMER)	GALLON	AS REQ'D.	AS PER SPEC.
ARON-ALPHA ADHESIVE	20 GRAM BOTTLE	1	———
• SHIPPING CLAMP ASSEMBLY •			
PLATE	½" × 7" × 3'-6½"	14	———
AM. STD. HEX BOLT	3/4" ϕ × 2" LG.	14	———
AM. STD. HEX NUT	3/4"	14	———
FLAT WASHER	3/4"	28	———
• PRESTRESSING ASSEMBLY •			
PLATE A	3/8" × 5" × 7"	28	———
PLATE B	5/8" × 5 3/4" × 9"	14	———
PLATE C	½" × 3" × 4"	14	———
HEX NUT	1"	42	———
FLAT WASHER	1"	28	———
THREADED ROD	1" ϕ × 6'-5" LG	14	———

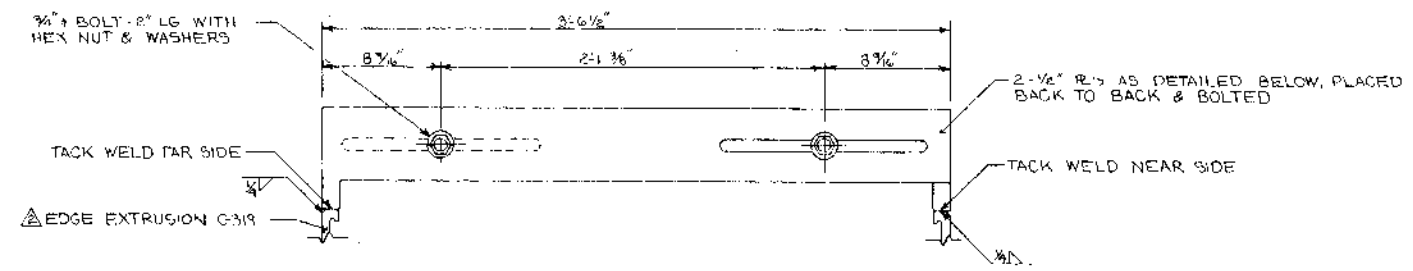

SHIPPING CLAMP
3/16" = 1'-0"

NOTE: EACH SHIPPING CLAMP ASSEMBLY INCLUDES:
2- PL'S ½" × 7" × 3'-6½"
2- 3/4" ϕ HEX BOLTS - 2" LG.
2- 3/4" HEX NUTS
4- 3/4" FLAT WASHERS

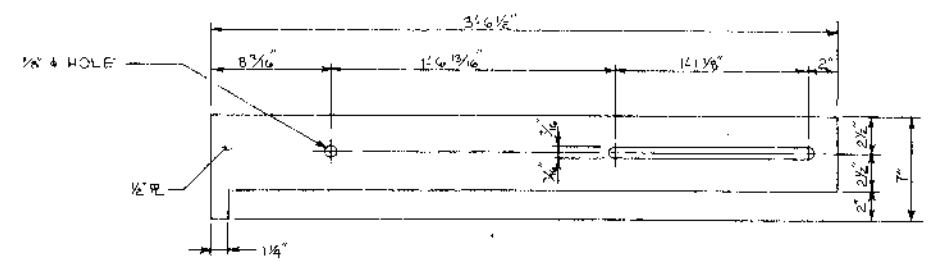

SHIPPING CLAMP DETAIL (LOCATIONS SHOWN ON SHEET 1)
3/16" = 1'-0"
2 REQ'D. / ASSEMBLY

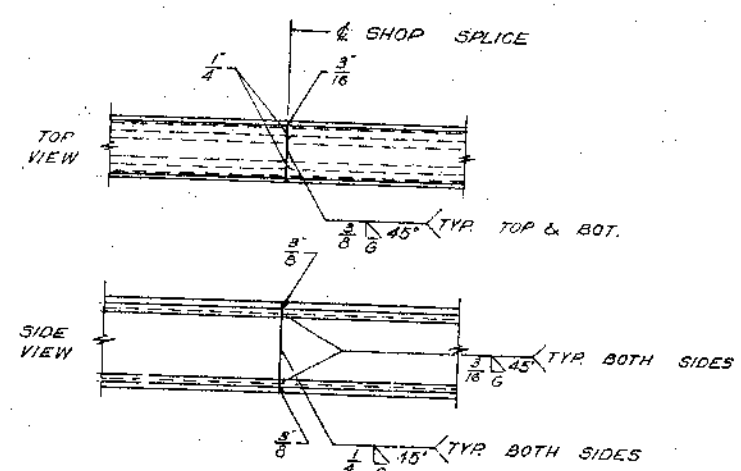

C-303 WELDING DETAIL
WELDING OF C-319 SIMILAR △

FOR INFORMATIONAL PURPOSES ONLY

NO	DATE	DESCRIPTION	NAME
2			
3			
4			
5			
△ 1	10-23-79	REVISED / STATE	RLK
△ 1	5-24-79	REVISED / STATE	RLK

REVISIONS

wilson bowman associates inc. 1780 niagara st., buffalo n.y. 14213

DRAWN BY R.L.K. DATE 12-20-78 JOB NO. 676
CHECKED BY R.L.P. DATE 2-7-79 SCALE NOTED

MATERIAL LIST SHIPPING CLAMP
MAURER EXPANSION JOINT

SHEET 9 OF 10

DRAWING NUMBER A-3489

SHEET NUMBER 125

ST. CHARLES | 450X(309) | 450-37-0020
PARISH | FEDERAL PROJECT | STATE PROJECT

DESIGNED MH | CHECKED 21 | DETAILED TB | CHECKED MH | DATE 12-11-02 | SCALE N.T.S.

NO. | DATE | REVISION DESCRIPTION | BY

MISSISSIPPI RIVER BRIDGE (LULING)
DECK TEST SECTION AND JOINT REPAIRS
VENDOR SUPPLIED SHOP DRAWINGS
E2 NORTHBOUND

HUVAL & ASSOCIATES, INC. Consulting Engineers

X:\HUVAL Projects\3154 (Luling)\CORE DWGS\revised 1-8-04\125\Ship Drawing.dwg, Layout1, 02/26/2004 12:44:36 PM

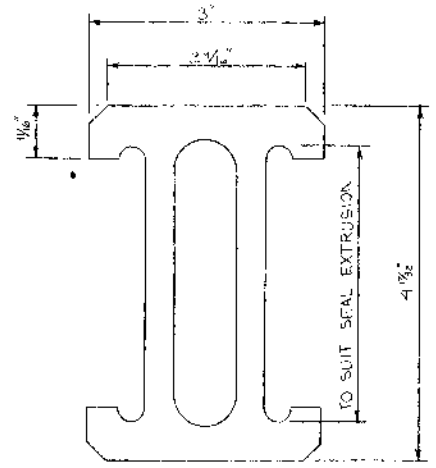

SUPPORT BEAM
C-303

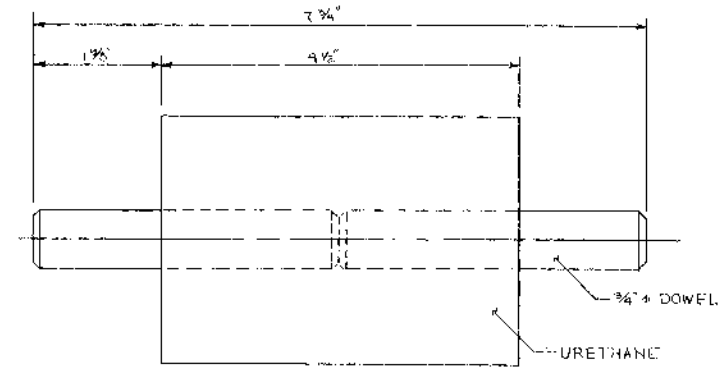

CONTROL SPRING
C-320

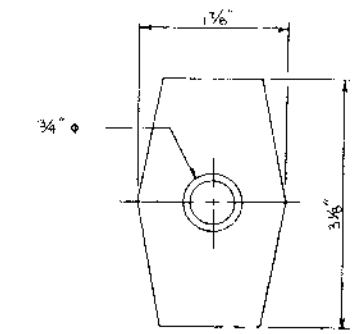

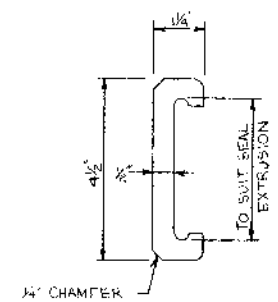

EDGE EXTRUSION (C-319)

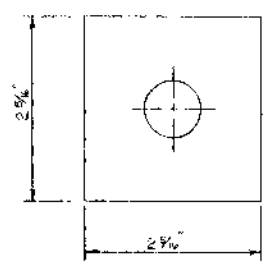

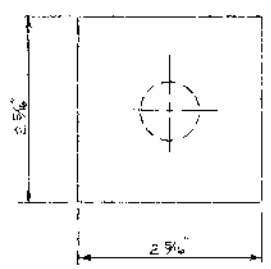

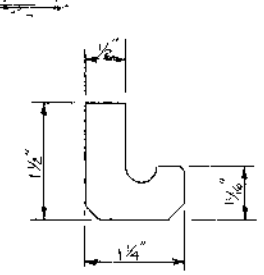

PLASTIC MOLDING
C-453

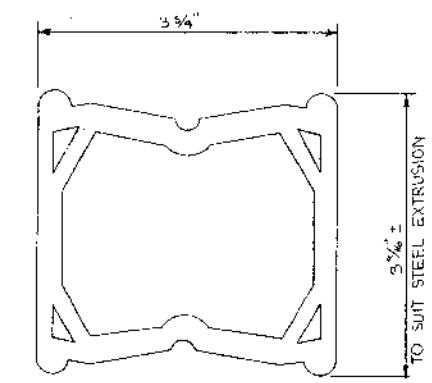

NEOPRENE LOCKING SEAL
C-220

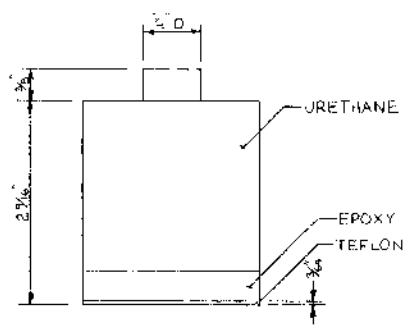

COMPRESSION SPRING
C-300

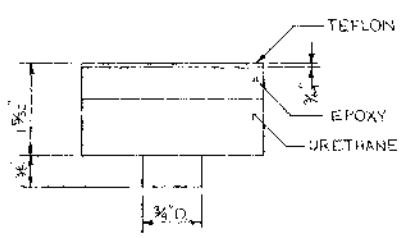

BEARING
C-307

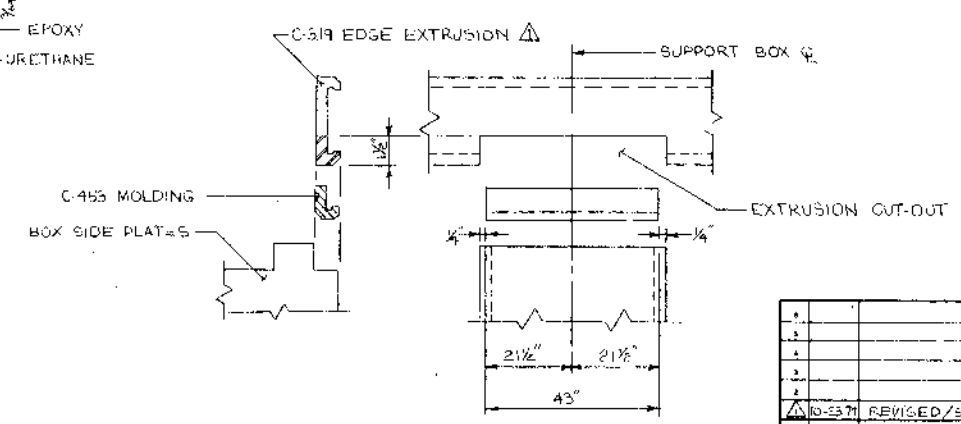

PLASTIC MOLDING INSTALLATION DETAIL
N.T.S.

FOR INFORMATIONAL PURPOSES ONLY

NO.	DATE	DESCRIPTION	NAME
6			
5			
4			
3			
2			
1	10-23-74	REVISED/STATE (ELIMINATE C-219)	P.L.K.

REVISIONS

watson bowman acronyi inc

DRAWN BY R.L.K. DATE 12-20-78 JOB NO. 676
CHECKED BY R.L.P. DATE 2-7-74 SCALE NOTED

WABO-MAURER COMPONENTS

SHEET 10 OF 10

DRAWING NUMBER A-3489

SHEET NUMBER 126

ST. CHARLES

PARISH

4503(509)

FEDERAL PROJECT

450-37-0020

STATE PROJECT

DESIGNED	MH	
CHECKED	JT	
DETAILED	TB	
CHECKED	MH	
DATE	12-11-02	
SCALE	N.T.S.	

BY | REVISION DESCRIPTION | DATE | NO.

MISSISSIPPI RIVER BRIDGE (LULING)
DECK TEST SECTION
AND JOINT REPAIRS

VENDOR SUPPLIED SHOP DRAWINGS
E2 NORTHBOUND

HUVAL & ASSOCIATES, INC. Consulting Engineers

X:\HUVAL Projects\3154 (Luling)\CORE DWGS\revised 1-8-04\A-2489.dwg Drawing dwg Layout1 02/25/2004 12:46:04 PM